DAIKIN

technical data

air conditioning systems

VRV® Heat Recovery

Small footprint combination

REYQ8-48P8_P9

R-410A

DAIKIN

technical data

air conditioning systems

VRV® Heat Recovery

Small footprint combination

REYQ8-48P8_P9

R-410A

TABLE OF CONTENTS

REYQ8-48P8_P9

1 Specifications 78
Technical Specifications 78
Electrical Specifications (50Hz) 81

2 Electrical data 83

3 Options 86

4 Capacity tables 87
Combination table 87
Cooling capacity tables 88
Heating capacity tables 130

5 Dimensional drawing & centre of gravity 172
Dimensional drawing 172
Dimensional drawing with accessories 177
Centre of gravity 179

6 Piping diagram 182

7 Wiring diagram 185
Wiring diagram 185
External connection diagram 190

8 Sound data 192
Sound pressure spectrum 192
Sound power spectrum 195

9 Installation 198
Service space 198
Fixation and foundation of units 199
Refrigerant pipe selection 200

10 Operation range 204

1 Specifications

1-1 Technical Specifications				REYQ8P9Y1B	REYQ10P8Y1B	REYQ12P9Y1B	REYQ14P8Y1B	REYQ16P8Y1B	REYQ18P9Y1B	REYQ20P9Y1B
Outdoor Unit				REYQ8P9Y1B	REYQ10P8Y1B	REYQ12P9Y1B	REYQ14P8Y1B	REYQ16P8Y1B	REMQ8P9Y1B	REMQ8P9Y1B
									REMQ10P8Y1B	REMQ12P8Y1B
Capacity	Cooling	kW		22.4	28.0	33.5	40.0	45.0	50.4	55.9
	Heating	kW		25.0	31.5	37.5	45.0	50.0	56.5	62.5
Casing	Colour			Ivory white (5Y7,5/1)						
Dimensions	Unit	Height	mm	1,680						
		Width	mm	1,300	1,300	1,300	1,300	1,300	930+930	930 + 930
		Depth	mm	765	765	765	765	765	765	765
Weight	Unit		kg	331	331	331	339	339	204+254	204 + 254
Heat Exchanger	Tube type			Cross fin coil						
	Fin	Fin type								
Fan	Type			Propeller						
Air Flow Rate (nominal at 230V)	Cooling	m³/min		190	190	210	235	240	180+185	180+200
Fan	Motor	Drive		Direct drive						
		Output motor	W	350x2	0.35x2	350 x 2	0.75x2	0.75x2	(750x1) + (750x1)	(750x1) + (750x1)
Compressor	Piston displacement		m	7.88 + 10.53	13.34+10.53	13.34 + 10.53	16.90+16.90	16.90+16.90	(13.34+ 10.53) +16.90	(13.34+ 10.53)+16.90
	Motor	Type		Hermetically sealed scroll compressor						
		Speed	rpm	3,720, 2,900	6300, 2900	6,300, 2,900	7980, 7980	7980, 7980	(6,300, 2,900), 7,980	(6,300, 2,900), 7,980
		Motor Output	kW	1.0 + 4.5	2.2 + 4.5	3.3 + 4.5	3.8 + 3.8	4.4 + 4.4	(2.2+4.5) x1+ 4.7x1	(3.5+4.5)x1 + 4.7x1
		Starting Method		Soft start						
Refrigerant	Name			R-410A						
	Charge		kg	10.3	10.6	10.8	11.1	11.1	8.2+9.0	8.2+9.1
	Control			Expansion valve (electronic type)						
Piping connections	Liquid (OD)	Type		Braze connection						
		Diameter (OD)	mm	9.52	9.52	12.7	12.7	12.7	15.9	15.9
	Gas	Type		Braze connection						
		Diameter (OD)	mm	19.1	22.2	28.6	28.6	28.6	28.6	28.6
	Discharge Gas	Type		Braze connection						
		Diameter (OD)	mm	15.9	19.1	19.1	22.2	22.2	22.2	28.6
	Oil equalizing	Type							Braze connection	Braze connection
		Diameter (OD)	mm						19.1	19.1
Defrost Method				Deicer						
Capacity Control				20~100	14 to 100	14 to 100	10 to 100	10 to 100	9 to 100	7 to 100
Safety devices				HPS						
				Fan motor driver overload protector						
				Over current relay						
				Inverter overload protector						
Standard Accessories				Installation manual						
				Operation manual						
				Connection pipes						
				Clamps						
Notes				Nominal cooling capacities are based on : indoor temperature : 27°CDB, 19°CWB, outdoor temperature : 35°CDB, equivalent refrigerant piping : 7.5m, level difference : 0m.						
				Nominal heating capacities are based on : indoor temperature : 20°CDB, outdoor temperature : 7°CDB, 6°CWB, equivalent refrigerant piping : 7.5m, level difference : 0m						

1 Specifications

1-1 Technical Specifications				REYQ22P8Y1B	REYQ24P8Y1B	REYQ26P8Y1B	REYQ28P8Y1B	REYQ30P8Y1B	REYQ32P8Y1B	REYQ34P9Y1B
Outdoor Unit				REMQ10P8Y1B	REMQ12P8Y1B	REMQ10P8Y1B	REMQ12P8Y1B	REMQ14P8Y1B	REMQ16P8Y1B	REMQ8P9Y1B
				REMQ12P8Y1B	REMQ12P8Y1B	REMQ16P8Y1B	REMQ16P8Y1B	REMQ16P8Y1B	REMQ16P8Y1B	REMQ10P8Y1B
										REMQ16P8Y1B
Capacity	Cooling	kW		61.5	67.0	73.0	78.5	85.0	90.0	95.4
	Heating	kW		69.0	75.0	81.5	87.5	95.0	100.0	107
Casing	Colour			Ivory white (5Y7,5/1)						
Dimensions	Unit	Height	mm	1,680						
		Width	mm	930 + 930	930 + 930	930 + 1,240	930 + 1,240	1,240 + 1,240	1,240 + 1,240	930+930+1,240
		Depth	mm	765	765	765	765	765	765	765
Weight	Unit		kg	254 + 254	254 + 254	254 + 334	254 + 334	334 + 334	334 + 334	204+254+334
Heat Exchanger	Fin	Fin type		Cross fin coil						
Fan	Type			Propeller						
Air Flow Rate (nominal at 230V)	Cooling	m³/min		185 + 200	200 + 200	185 + 230	200 + 230	230 + 230	230 + 230	180+185+230
Fan	Motor	Drive		Direct drive						
		Output motor	W	(0.75 x 1)+ (0.75 x 1)	0.75 x 2	(0.75 x 1)+ (0.35 x 2)	(0.75 x 1)+ (0.35 x 2)	(0.35 x 2)+ (0.35 x 2)	(0.35 x 2)x 2	(750x1) + (750x1) + (350x2)
Compressor	Piston displacement		m	(13.34+10.53) x2	(13.34+10.53) x2	(13.34+10.53+ 10.53)+(13.34 +10.53)	(13.34+10.53+ 10.53)+(13.34 +10.53)	(13.34+10.53+ 10.53)x2	(13.34+10.53+ 10.53)x2	(13.34+10.53+ 10.53) + (13.34+10.53) + 16.90
	Motor	Type		Hermetically sealed scroll compressor						
		Speed	rpm	(6,300, 2,900) x 2	(6,300, 2,900) x 2	(6,300, 2,900, 2,900)+ (6,300, 2,900)	(6,300, 2,900, 2,900)+ (6,300, 2,900)	(6,300, 2,900, 2,900)x 2	(6,300, 2,900, 2,900)x 2	(6,300, 2,900, 2,900) + (6,300, 2,900) + 7,980
		Motor Output	kW	(3.5 + 4.5) x 1+ (2.2 + 4.5) x 1	(3.5 + 4.5) x 2	(3.2 + 4.5 + 4.5)x 1+ (2.2 + 4.5)x 1	(3.2 + 4.5 + 4.5)x 1+ (3.5 + 4.5)x 1	(3.2 + 4.5 + 4.5)x 1+ (1.9 + 4.5 + 4.5)x 1	(3.2 + 4.5 + 4.5)x 2	(3.2+4.5+4.5)x 1 + (2.2+4.5) x1 +4.7x1
		Starting Method		Soft start						
Refrigerant	Name			R-410A						
	Charge		kg	9.0 + 9.1	9.1 + 9.1	9.0 + 11.7	9.1 + 11.7	11.7 + 11.7	11.7 + 11.7	8.2+9.0+11.7
	Control			Expansion valve (electronic type)						
Piping connections	Liquid (OD)	Type		Braze connection						
		Diameter (OD)	mm	15.9	15.9	19.1	19.1	19.1	19.1	19.1
	Gas	Type		Braze connection						
		Diameter (OD)	mm	28.6	34.9	34.9	34.9	34.9	34.9	34.9
	Discharge Gas	Type		Braze connection						
		Diameter (OD)	mm	28.6	28.6	28.6	28.6	28.6	28.6	28.6
	Oil equalizing	Type		Braze connection						
		Diameter (OD)	mm	19.1						
Defrost Method				Deicer						
Capacity Control				7 to 100	6 to 100	6 to 100	6 to 100	5 to 100	5 to 100	5 to 100
Safety devices				HPS						
				Fan motor driver overload protector						
				Over current relay						
				Inverter overload protector						
Standard Accessories	Standard Accessories			Installation manual						
	Quantity			1	1	1	1	1	1	
	Standard Accessories			Operation manual						
	Quantity			1	1	1	1	1	1	
	Standard Accessories			Connection pipes						
				Cramps						
Notes				Nominal cooling capacities are based on : indoor temperature : 27°CDB, 19°CWB, outdoor temperature : 35°CDB, equivalent refrigerant piping : 7.5m, level difference : 0m.						
				Nominal heating capacities are based on : indoor temperature : 20°CDB, outdoor temperature : 7°CDB, 6°CWB, equivalent refrigerant piping : 7.5m, level difference : 0m						

1 Specifications

1-1 Technical Specifications				REYQ36P9Y1B	REYQ38P8Y1B	REYQ40P8Y1B	REYQ42P8Y1B	REYQ44P8Y1B	REYQ46P8Y1B	REYQ48P8Y1B
Outdoor Unit				REMQ8P9Y1B	REMQ10P8Y1B	REMQ12P8Y1B	REMQ10P8Y1B	REMQ12P8Y1B	REMQ14P8Y1B	REMQ16P8Y1B
				REMQ12P8Y1B	REMQ12P8Y1B	REMQ12P8Y1B	REMQ16P8Y1B	REMQ16P8Y1B	REMQ16P8Y1B	REMQ16P8Y1B
				REMQ16P8Y1B						
Capacity	Cooling	kW		101	107.0	112.0	118.0	124.0	130.0	135.0
	Heating	kW		113	119.0	125.0	132.0	138.0	145.0	150.0
Casing	Colour			Ivory white (5Y7,5/1)						
Dimensions	Unit	Height	mm	1,680						
		Width	mm	930+930+1,240	930 + 930 + 1,240	930 + 930 + 1,240	930 + 1,240 + 1,240	930 + 1,240 + 1,240	1,240 + 1,240 + 1,240	1,240 + 1,240 + 1,240
		Depth	mm	765	765	765	765	765	765	765
Weight	Unit		kg	204+254+334	254 + 254 + 334	254 + 254 + 334	254 + 334 + 334	254 + 334 + 334	334 + 334 + 334	334 + 334 + 334
Heat Exchanger	Fin	Fin type		Cross fin coil						
Fan	Type			Propeller						
Air Flow Rate (nominal at 230V)	Cooling	m³/min		180+200+230	185 + 200 + 230	200 + 200 + 230	185 + 230 + 230	200 + 230 + 230	230 + 230 + 230	230 + 230 + 230
Fan	Motor	Drive		Direct drive						
		Output motor	W	(0.75x1)+(0.75 x1)+(0.35x2)	(0.75 x 1)+ (0.75 x 1)+ (0.35 x 2)	(0.75 x 2)+ (0.35 x 2)	(0.75 x 1)+ (0.35 x 2)x 2	(0.75 x 1)+ (0.35 x 2)x 2	(0.35 x 2)+ (0.35 x 2)x 2	(0.35 x 2)x3
Compressor	Piston displacement		m	(13.34+10.53+ 10.53)+(13.34 +10.53)+16.90	(13.34+10.53+ 10.53)+(13.34 +10.53)x2	(13.34+10.53+ 10.53)+(13.34 +10.53)x2	(13.34+10.53+ 10.53)x2+(13. 34+10.53)	(13.34+10.53+ 10.53)x2+(13. 34+10.53)	(13.34+10.53+ 10.53)x3	(13.34+10.53+ 10.53)x3
	Motor	Type		Hermetically sealed scroll compressor						
		Speed	rpm	(6,300+2,900+ 2,900)+(6,300 +2,900)+7,980	(6,300, 2,900, 2,900)+ (6,300,2,900)x 2	(6,300, 2,900, 2,900)+ (6,300,2,900)x 2	(6,300, 2,900, 2,900)x 2+ (6,300, 2,900)	(6,300, 2,900, 2,900)x 2+ (6,300, 2,900)	(6,300, 2,900, 2,900)x 3	(6,300, 2,900, 2,900)x 3
		Motor Output	kW	(3.2+4.5+4.5)x 1+(3.5+4.5)x1 +4.7x1	(3.2 + 4.5 + 4.5)x 1+ (3.5 + 4.5)x 1+ (2.2 + 4.5)x 1	(3.2 + 4.5 + 4.5)x 1+ (3.5 + 4.5)x 2	(3.2 + 4.5 + 4.5)x 1+ (2.2 + 4.5)x 1	(3.2 + 4.5 + 4.5)x 2+ (3.5 + 4.5)x 1	(3.2 + 4.5 + 4.5)x 2+ (1.9 + 4.5 + 4.5)x 1	(3.2 + 4.5 + 4.5)x 3
		Starting Method		Soft start						
Refrigerant	Name			R-410A						
	Charge		kg	8.2+9.1+11. 7	9.0 + 9.1 + 11.7	9.1 + 9.1 + 11.7	9.0 + 11.7 + 11.7	9.1 + 11.7 + 11.7	11.7 + 11.7 + 11.7	11.7 + 11.7 + 11.7
	Control			Expansion valve (electronic type)						
Piping connections	Liquid (OD)	Type		Braze connection						
		Diameter (OD)	mm	19.1						
	Gas	Type		Braze connection						
		Diameter (OD)	mm	41.3						
	Discharge Gas	Type		Braze connection						
		Diameter (OD)	mm	28.6	34.9	34.9	34.9	34.9	34.9	34.9
	Oil equalizing	Type		Braze connection						
		Diameter (OD)	mm	19.1						
Defrost Method				Deicer						
Capacity Control				5 to 100	5 to 100	4 to 100	4 to 100	4 to 100	4 to 100	4 to 100
Safety devices				HPS						
				Fan motor driver overload protector						
				Over current relay						
				Inverter overload protector						
Standard Accessories	Standard Accessories			Installation manual						
	Quantity				1	1	1	1	1	1
	Standard Accessories			Operation manual						
	Quantity				1	1	1	1	1	1
	Standard Accessories			Connection pipes						
				Cramps						
Notes				Nominal cooling capacities are based on : indoor temperature : 27°CDB, 19°CWB, outdoor temperature : 35°CDB, equivalent refrigerant piping : 7.5m, level difference : 0m.						
				Nominal heating capacities are based on : indoor temperature : 20°CDB, outdoor temperature : 7°CDB, 6°CWB, equivalent refrigerant piping : 7.5m, level difference : 0m						

1 Specifications

1-2 Electrical Specifications (50Hz)			REYQ8P9Y1B	REYQ10P8Y1B	REYQ12P9Y1B	REYQ14P8Y1B	REYQ16P8Y1B	REYQ18P9Y1B	REYQ20P9Y1B
Power Supply	Phase		3~						
	Frequency	Hz	50						
	Voltage	V	380-415						
Current	Starting current (MSC)	A	74	74	75			78	79
	Minimum Ssc value	kVa	699	904	912	2,432	2,447	2,146	2,162
	Maximum Running Current	A	2.7 + 7.6	4.8 + 7.6	6.9 + 7.5	8.2x2	10.8x2	8.2 + 4.5 + 6.8	8.2+7.0+6.7
	Minimum circuit amps (MCA)	A	17.1	22.1	22.3	32.8	33.0	40.1	41.2
	Maximum fuse amps (MFA)	A	20	25	25	40	40	45	50
	Total overcurrent amps (TOCA)	A	31.5	31.5	31.5	33.1	33.1	48.0	48.0
	Full load amps (FLA)	A	0.7 x 2	0.7x2	0.8x2	1.0x2	1.1x2	0.7 + 0.9	0.7+1.2
Voltage range	Minimum	V	342						
	Maximum	V	456						
Notes			RLA is based on following conditions : indoor temperature : 27°CDB/19°CWB , outdoor temperature : 35°CDB						
			TOCA means the total value of each OC set						
			MSC means the maximum current during start up of the compressor						
			Voltage range : units are suitable for use on electrical systems where voltage supplied to unit terminal is not below or above listed range limits						
			Maximum allowable voltage range variation between phases is 2%						
			Select wire size based on the larger value of MCA or TOCA						
			MFA is used to select the circuit breaker and the ground fault circuit interrupter (earth leakage circuit breaker)						
			In accordance with EN/IEC 61000-3-11(1), respectively EN/IEC 61000-3-12(2), it may be necessary to consult the distribution network operator to ensure that the equipment is connected only to a supply with Zsys(4) <= Zmax, respectively Ssc(3) >= minimum Ssc value - (1) European/international technical standard setting the limits for voltage changers, voltage fluctuations and flicker in public low-voltage supply systems for equipment with rated <= 75A. (2) European/international technical standard setting the limits for harmonic currents produced by equipment connected to public low-voltage system with input current > 16A and <= 75A per phase. (3) Short-circuit power (4) System impedance						

1-2 Electrical Specifications (50Hz)			REYQ22P8Y1B	REYQ24P8Y1B	REYQ26P8Y1B	REYQ28P8Y1B	REYQ30P8Y1B	REYQ32P8Y1B	REYQ34P9Y1B
Power Supply	Phase		3~						
	Frequency	Hz	50						
	Voltage	V	380-415						
Current	Starting current (MSC)	A	88.0	88.0	98.0	98.0	108.0	109.0	101
	Minimum Ssc value	kVa	1,872	1,888	2,041	2,057	2,227	2,227	3,259
	Maximum Running Current	A	4.5 + 6.8 + 7.0 + 6.7	(7.0 + 6.7)x 2	4.5 + 6.8 + 6.1 + 7.6x 2	7.0 + 6.7 + 6.1 + 7.6x 2	3.4 + 7.5x 2 + 6.1 + 7.6x 2	(6.1 + 7.6x 2)x 2	8.2+4.5+6.8 +6.1+7.6x2
	Minimum circuit amps (MCA)	A	44.3	45.4	53.1	54.2	63.0	63.0	71.6
	Maximum fuse amps (MFA)	A	50.0	50.0	60.0	60.0	70.0	70.0	80
	Total overcurrent amps (TOCA)	A	63.0	63.0	77.9	77.9	92.8	92.8	94.5
	Full load amps (FLA)	A	0.9 + 1.2	1.2 + 1.2	0.9 + 0.6x 2	1.2 + 0.6x 2	(0.6x 2)x 2	(0.6x 2)x 2	0.7+0.9+0.6 x2
Voltage range	Minimum	V	342						
	Maximum	V	456						

1 Specifications

1-2 Electrical Specifications (50Hz)	REYQ22P8Y1B	REYQ24P8Y1B	REYQ26P8Y1B	REYQ28P8Y1B	REYQ30P8Y1B	REYQ32P8Y1B	REYQ34P9Y1B
Notes	RLA is based on following conditions : indoor temperature : 27°CDB/19°CWB , outdoor temperature : 35°CDB						
	TOCA means the total value of each OC set						
	MSC means the maximum current during start up of the compressor						
	Voltage range : units are suitable for use on electrical systems where voltage supplied to unit terminal is not below or above listed range limits						
	Maximum allowable voltage range variation between phases is 2%						
	Select wire size based on the larger value of MCA or TOCA						
	MFA is used to select the circuit breaker and the ground fault circuit interrupter (earth leakage circuit breaker)						
	In accordance with EN/IEC 61000-3-11(1), respectively EN/IEC 61000-3-12(2), it may be necessary to consult the distribution network operator to ensure that the equipment is connected only to a supply with Zsys(4) <= Zmax, respectively Ssc(3) >= minimum Ssc value - (1) European/international technical standard setting the limits for voltage changers, voltage fluctuations and flicker in public low-voltage supply systems for equipment with rated <= 75A. (2) European/international technical standard setting the limits for harmonic currents produced by equipment connected to public low-voltage system with input current > 16A and <= 75A per phase. (3) Short-circuit power (4) System impedance						

1

1

1-2 Electrical Specifications (50Hz)				REYQ36P9Y1B	REYQ38P8Y1B	REYQ40P8Y1B	REYQ42P8Y1B	REYQ44P8Y1B	REYQ46P8Y1B	REYQ48P8Y1B
Power Supply	Phase			3~						
	Frequency		Hz	50						
	Voltage		V	380-415						
Current	Starting current (MSC)		A	102	111.0	111.0	122.0	122.0	132.0	134.0
	Minimum Ssc value		kVa	3,275	2,985	3,001	3,154	3,170	3,340	3,340
	Maximum Running Current		A	8.2+7.0+6.7 +6.1+7.6x2	4.5 + 6.8 + 7.0 + 6.7 + 6.1 + 7.6x 2	(7.0 + 6.7)x 2 + 6.1 + 7.6x 2	4.5 + 6.8 + (6.1 + 7.6x 2)x 2	7.0 + 6.7 + (6.1 + 7.6x 2)x 2	3.4 + 7.5x 2 + (6.1 + 7.6x 2)x 2	(6.1 + 7.6x 2)x 3
	Minimum circuit amps (MCA)		A	72.7	75.8	76.9	84.6	85.7	94.5	94.5
	Maximum fuse amps (MFA)		A	80	90.0	90.0	100.0	100.0	110.0	110.0
	Total overcurrent amps (TOCA)		A	94.5	109.4	109.4	124.3	124.3	139.3	139.3
	Full load amps (FLA)		A	0.7+1.2+0.6 x2	0.9 + 1.2 + 0.6x 2	1.2 + 1.2 + 0.6x 2	0.9 + (0.6x 2)x 2	1.2 + (0.6x 2)x 2	0.6x 2+ (0.6x 2)x 2	(0.6x 2)x 3
Voltage range	Minimum		V	342						
	Maximum		V	456						
Notes	RLA is based on following conditions : indoor temperature : 27°CDB/19°CWB , outdoor temperature : 35°CDB									
	TOCA means the total value of each OC set									
	MSC means the maximum current during start up of the compressor									
	Voltage range : units are suitable for use on electrical systems where voltage supplied to unit terminal is not below or above listed range limits									
	Maximum allowable voltage range variation between phases is 2%									
	Select wire size based on the larger value of MCA or TOCA									
	MFA is used to select the circuit breaker and the ground fault circuit interrupter (earth leakage circuit breaker)									
	In accordance with EN/IEC 61000-3-11(1), respectively EN/IEC 61000-3-12(2), it may be necessary to consult the distribution network operator to ensure that the equipment is connected only to a supply with Zsys(4) <= Zmax, respectively Ssc(3) >= minimum Ssc value - (1) European/international technical standard setting the limits for voltage changers, voltage fluctuations and flicker in public low-voltage supply systems for equipment with rated <= 75A. (2) European/international technical standard setting the limits for harmonic currents produced by equipment connected to public low-voltage system with input current > 16A and <= 75A per phase. (3) Short-circuit power (4) System impedance									

2 Electrical data

REYQ8,12P9
REYQ10,14,16P8

Modelname	Unit				Power supply			Comp.		OFM	
	Hz	Volts	Min.	Max.	MCA	TOCA	MFA	MSC	RLA	kW	FLA
REYQ8P9Y1B	50	380	342	456	17,1	31,5	25	78	2,6 + 7,2	0,35 x 2	0,7 x 2
		400						74	2,7 + 7,6		
		415						72	2,8 + 7,9		
REYQ10P8Y1B	50	380	342	456	22,1	31,5	25	78	4,5 + 7,2	0,35 x 2	0,7 x 2
		400						74	4,8 + 7,6		
		415						72	5,0 + 7,9		
REYQ12P9Y1B	50	380	342	456	22,3	31,5	25	79	6,5 + 7,1	0,35 x 2	0,8 x 2
		400						75	6,9 + 7,5		
		415						72	7,1 + 7,8		
REYQ14P8Y1B	50	380	342	456	32,8	33,1	40	---	7,7 x 2	0,75 x 2	1,0 x 2
		400						---	8,2 x 2		
		415						---	8,5 x 2		
REYQ16P8Y1B	50	380	342	456	33,0	33,1	40	---	10,2 x 2	0,75 x 2	1,1 x 2
		400						---	10,8 x 2		
		415						---	11,2 x 2		

3TW057586A

Symbols

MCA : Min.Circuit Amps. (A)
MFA : Max. Fuse Amps (A)
TOCA : Total Over-current Amps. (A)
MSC : Max. Starting current
RLA : Rated Load Amps (A)
OFM : Outdoor Fan Motor
FLA : Full Load Amps (A)
kW : Rated Motor Output (kW)

The relationship between the starting time and the starting current

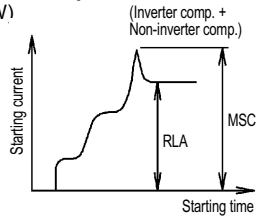

Notes

1 RLA is based on the following conditions.
Indoor temp. 27°CDB/19.0°CWB
Outdoor temp. 35°CDB
2 TOCA means the total value of each OC set.
3 MSC means the Max. current during the starting of compressor.
4 Voltage range
Units are suitable for use on electrical systems where voltage supplied to unit terminal is not below or above listed range limits.
5 Maximum allowable voltage variation between phases is 2%
6 Select wire size based on the larger value of MCA or TOCA.
7 MFA is used to select the circuit breaker and the ground fault circuit interrupter (earth leakage circuit breaker).

REYQ8,12P9

REYQ10,14,16P8

			REYQ8P9	REYQ10P8	REYQ12P9	REYQ14P8	REYQ8P8
Electrical specifications	Zmax	Ω	-	0,27	0,27	-	-
	Minimum S_{sc} value	KVA	669	904	912	2432	2447

NOTES

1 In accordance with EN/IEC 61000-3-11(1) , respectively EN/IEC 61000-3-11(2), it may be necessary to consult the distribution network operator to ensure that the equipment is connected only to a supply with Z_{sys}(4) ≤ Z_{max}, respectively S_{sc}(3) minimum S_{sc} value

2 (1) European/International technical standard setting the limits for voltage changes, voltage fluctuations and flicker in public low-voltage supply systems for equipment with rated ≤ 75A.

(2) European/International technical standard setting the limits for harmonic currents produced by equipment connected to public low-voltage system with input current > 16A and ≤ 75A per phase .

(3) Short-circuit power

(4) System impedance.

4TW30321-1A

2 Electrical data

REMQ8P9
REMQ10-16P8

	Unit				Power supply		Comp.		OFM	
Modelname	Hz Unit	Volts	Min.	Max.	MCA	MFA	MSC	RLA	kW	FLA
REMQ8P9	50	380	342	456	18,5	25	---	8,6	0,75	0,7
		400						8,2		
		415						7,9		
REMQ10P8	50	380	342	456	21,6	25	78	4,7 + 7,2	0,75	0,9
		400					74	4,5 + 6,8		
		415					72	4,3 + 6,6		
REMQ12P8	50	380	342	456	22,7	25	79	7,3 + 7,1	0,75	1,2
		400					75	4,5 + 6,8		
		415					72	7,0 + 6,7		
REMQ14P8	50	380	342	456	31,5	40	89	3,6 + 7,9 x 2	0,35 x 2	0,6 x 2
		400					84	3,4 + 7,5 x 2		
		415					81	3,3 + 7,3 x 2		
REMQ16P8	50	380	342	456	31,5	40	90	6,4 + 8,0 x 2	0,35 x 2	0,6 x 2
		400					85	6,1 + 7,6 x 2		
		415					82	5,5 + 7,3 x 2		

3TW29119-3

Symbols

MCA : Min.Circuit Amps. (A)
MFA : Max. Fuse Amps (A)
MSC : Max. Starting current
RLA : Rated Load Amps (A)
OFM : Outdoor Fan Motor
FLA : Full Load Amps (A)
kW : Rated Motor Output (kW)

The relationship between the starting time and the starting current

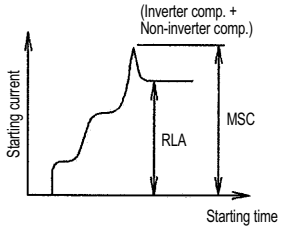

Notes

1 REMQ units can only be installed in multi combination.
2 RLA is based on the following conditions.
Indoor temp. 27°CDB/19.0°CWB
Outdoor temp. 35°CDB
3 MSC means the Max. current during the starting of compressor.
4 Voltage range
Units are suitable for use on electrical systems where voltage supplied to unit terminal is not below or above listed range limits.
5 Maximum allowable voltage variation between phases is 2%
6 Select wire size based on the larger value of MCA.
7 MFA is used to select the circuit breaker and the ground fault circuit interrupter (earth leakage circuit breaker).

REYQ18,20P9
REYQ22-32P8

Model Name			Units				Power supply			Comp.		OFM	
Combination unit	Independent unit		Hz	Volts	Min.	Max.	MCA	TOCA	MFA	MSC	RLA	kW	FLA
REYQ18P9Y1B	REMQ8P9Y1B	REMQ10P8Y1B	50	380	342	456	40,1	48,0	45	82	8,6 + 4,7 + 7,2	0,75 + 0,75	0,7 + 0,9
				400						78	8,2 + 4,5 + 6,8		
				415						75	7,9 + 4,3 + 6,6		
REYQ20P9Y1B	REMQ8P9Y1B	REMQ12P8Y1B	50	380	342	456	41,2	48,0	50	83	8,6 + 7,3 + 7,1	0,75 + 0,75	0,7 + 1,2
				400						79	8,2 + 7,0 + 6,7		
				415						76	7,9 + 6,7 + 6,5		
REYQ22P8Y1B	REMQ10P8Y1B	REMQ12P8Y1B	50	380	342	456	44,3	63,0	50	92	4,7 + 7,2 + 7,3 + 7,1	0,75 + 0,75	0,9 + 1,2
				400						88	4,5 + 6,8 + 7,0 + 6,7		
				415						84	4,3 + 6,6 + 6,7 + 6,5		
REYQ24P8Y1B	REMQ12P8Y1B	REMQ12P8Y1B	50	380	342	456	45,4	63,0	50	93	(7,3 + 7,1) x 2	0,75 + 0,75	1,2 + 1,2
				400						88	(7,0 + 6,7) x 2		
				415						85	(6,7 + 6,5) x 2		
REYQ26P8Y1B	REMQ10P8Y1B	REMQ16P8Y1B	50	380	342	456	53,1	77,9	60	103	4,7 + 7,2 + 6,4 + 8,0 x 2	0,75 + 0,35 x 2	0,9 +0,6 x 2
				400						98	4,5 + 6,8 + 6,1 + 7,6 x 2		
				415						94	4,3 + 6,6 + 5,9 + 7,3 x 2		
REYQ28P8Y1B	REMQ12P8Y1B	REMQ16P8Y1B	50	380	342	456	54,2	77,9	60	103	7,3 + 7,1 + 6,4 + 8,0 x 2	0,75 + 0,35 x 2	1,2 +0,6 x 2
				400						98	7,0 + 6,7 + 6,1 + 7,6 x 2		
				415						95	6,7 + 6,5 + 5,9 + 7,3 x 2		
REYQ30P8Y1B	REMQ14P8Y1B	REMQ16P8Y1B	50	380	342	456	63,0	92,8	70	113	3,6 + 7,9 x 2 + 6,4 + 8,0 x 2	(0,35 x 2) x 2	(0,6 x 2) x2
				400						108	3,4 + 7,5 x 2 + 6,1 + 7,6 x 2		
				415						104	3,3 + 7,3 x 2 + 5,9 + 7,3 x 2		
REYQ32P8Y1B	REMQ16P8Y1B	REMQ16P8Y1B	50	380	342	456	63,0	92,8	70	115	(6,4 + 8,0 x 2) x 2	(0,35 x 2) x 2	(0,6 x 2) x2
				400						109	(6,1 + 7,6 x 2) x 2		
				415						105	(5,9 + 7,3 x 2) x 2		

3TW057587

Symbols

MCA : Min.Circuit Amps. (A)
MFA : Max. Fuse Amps. (A)
TOCA : Total Over-current Amps. (A)
MSC : Max. Starting current
RLA : Rated Load Amps (A)
OFM : Outdoor Fan Motor
FLA : Full Load Amps (A)
kW : Rated Motor Output (kW)

Notes

1 RLA is based on the following conditions: Indoor temp. 27°CDB/19.0°CWB
Outdoor temp. 35°CDB
2 TOCA means the total value of each OC set.
3 MSC means the Max. current during the starting of compressor.
4 Voltage range: Units are suitable for use on electrical systems where voltage supplied to unit terminal is not below or above listed range limits.
5 Maximum allowable voltage variation between phases is 2%
6 Select wire size based on the larger value of MCA or TOCA.
7 MFA is used to select the circuit breaker and the ground fault circuit interrupter (earth leakage circuit breaker).

The relationship between the starting time and the starting current

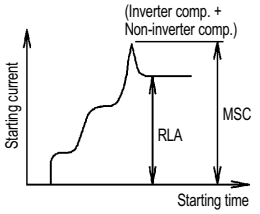

2 Electrical data

REYQ34,36P9
REYQ38-48P8

Model Name				Units				Power supply			Comp.		OFM	
Combination unit	Independent unit			Hz	Volt	Min.	Max	MC	TOCA	MFA	MS	RLA	kW	FLA
REYQ34P9Y1B	REMQ8P9Y1B	REMQ10P8Y1B	REMQ16P8Y1B	50	380	342	456	71,6	94,5	80	107	8,6 + 4,7 + 7,2 + 6,4 + 8,0 x 2	0,75 + 0,75 + 0,35 x 2	0,7 + 0,9 + 0,6 x 2
					400						101	8,2 + 4,5 + 6,8 + 6,1 + 7,6 x 2		
					415						98	7,9 + 4,3 + 6,6 + 5,9 + 7,3 x 2		
REYQ36P9Y1B	REMQ8P9Y1B	REMQ12P8Y1B	REMQ16P8Y1B	50	380	342	456	72,7	94,5	80	107	8,6 + 7,3 + 7,1 + 6,4 + 8,0 x 2	0,75 + 0,75 + 0,35 x 2	0,7 + 1,2 + 0,6 x 2
					400						102	8,2 + 7,0 + 6,7 + 6,1+ 7,6 x 2		
					415						98	7,9 + 6,7 + 6,5 + 5,9 + 7,3 x 2		
REYQ38P8Y1B	REMQ10P8Y1B	REMQ12P8Y1B	REMQ16P8Y1B	50	380	342	456	75,8	109,4	90	117	4,7 + 7,2 + 7,3 + 7,1 + 6,4 + 8,0 x 2	0,75 + 0,75 + 0,35 x 2	0,9 + 1,2 + 0,6 x 2
					400						111	4,5 + 6,8 + 7,0 + 6,7 + 6,1 + 7,6 x 2		
					415						107	4,3 + 6,6 + 6,7 + 6,5 + 5,9 +7,3 x 2		
REYQ40P8Y1B	REMQ12P8Y1B	REMQ12P8Y1B	REMQ16P8Y1B	50	380	342	456	76,9	109,4	90	117	(7,3 + 7,1) x 2 + 6,4 + 8,0 x 2	0,75 + 0,75 + 0,35 x 2	1,2 + 1,2 + 0,6 x 2
					400						111	(7,0 + 6,7) x 2 + 6,1 + 7,6 x 2		
					415						107	(6,7 + 6,5) x 2 + 5,9 + 7,2 x 2		
REYQ42P8Y1B	REMQ10P8Y1B	REMQ16P8Y1B	REMQ16P8Y1B	50	380	342	456	84,6	124,3	100	128	4,7 + 7,2 + (6,4 + 8,0 x 2) x 2	0,75 + (0,35 x 2) x 2	0,9 + (0,6 x 2) x 2
					400						122	4,5 + 6,8 + (6,1 + 7,6 x 2) x 2		
					415						118	4,3 + 6,6 + (5,9 + 7,3 x 2) x 2		
REYQ44P8Y1B	REMQ12P8Y1B	REMQ16P8Y1B	REMQ16P8Y1B	50	380	342	456	85,7	124,3	100	129	7,3 + 7,1 + (6,4 + 8,0 x 2) x 2	0,75 + (0,35 x 2) x 2	1,2 + (0,6 x 2) x 2
					400						122	7,0 + 6,7 + (6,1 + 7,6 x 2) x 2		
					415						118	6,7 + 6,5 + (5,9 + 7,3 x 2) x 2		
REYQ46P8Y1B	REMQ14P8Y1B	REMQ16P8Y1B	REMQ16P8Y1B	50	380	342	456	94,5	139,3	110	139	3,6 + 7,9 x 2 + (6,4 + 8,0 x 2) x 2	0,35 x 2 + (0,35 x 2) x 2	0,6 x 2 + (0,6 x 2) x 2
					400						132	3,4 + 7,5 x 2 + (6,1 + 7,6 x 2) x 2		
					415						127	3,3 + 7,3 x 2 + (5,9 + 7,3 x 2) x 2		
REYQ48P8Y1B	REMQ16P8Y1B	REMQ16P8Y1B	REMQ16P8Y1B	50	380	342	456	94,5	139,3	110	141	(6,4 + 8,0 x 2) x 3	(0,35 x 2) x 3	(0,6 x 2) x 3
					400						134	(6,1 + 7,6 x 2) x 3		
					415						129	(5,9 + 7,3 x 2) x 3		

3TW057588

Symbols

MCA	:	Min.Circuit Amps.	(A)
MFA	:	Max. Fuse Amps.	(A)
TOCA	:	Total Over-current Amps.	(A)
MSC	:	Max. Starting current	
RLA	:	Rated Load Amps	(A)
OFM	:	Outdoor Fan Motor	
FLA	:	Full Load Amps	(A)
kW	:	Rated Motor Output	(kW)

Notes

1 RLA is based on the following conditions: Indoor temp. 27°CDB/19.0°CWB
Outdoor temp. 35°CDB
2 TOCA means the total value of each DC set.
3 MSC means the Max. current during the starting of compressor.
4 Voltage range: Units are suitable for use on electrical systems where voltage supplied to unit terminal is not below or above listed range limits.
5 Maximum allowable voltage variation between phases is 2%
6 Select wire size based on the larger value of MCA or TOCA.
7 MFA is used to select the circuit breaker and the ground fault circuit interrupter (earth leakage circuit breaker).

The relationship between the starting time and the starting current

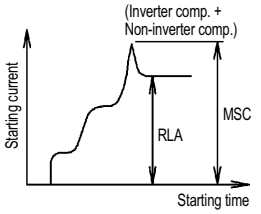

REYQ18,20,34,36P9
REYQ22-32, 38-48P8

	COMBINATION OF	Minimum S_{sc} value [kVA]	Z_{MAX} [Ω]
REYQ18P9	REMQ8P9 + REMQ10P8	2146	0,27
REYQ20P9	REMQ8P9 + REMQ12P8	2162	0,27
REYQ22P8	REMQ10P8 + REMQ12P8	1872	0,25
REYQ24P8	REMQ12P8 + REMQ12P8	1888	0,25
REYQ26P8	REMQ10P8 + REMQ16P8	2041	0,23
REYQ28P8	REMQ12P8 + REMQ16P8	2057	0,23
REYQ30P8	REMQ14P8 + REMQ16P8	2227	0,22
REYQ32P8	REMQ16P8 + REMQ16P8	2227	0,22
REYQ34P9	REMQ8P9 + REMQ10P8 + REMQ16P8	3259	0,23
REYQ36P9	REMQ8P9 + REMQ12P8 + REMQ16P8	3275	0,23
REYQ38P8	REMQ10P8 + REMQ12P8 + REMQ16P8	2985	0,22
REYQ40P8	REMQ12P8 + REMQ12P8 + REMQ16P8	3001	0,22
REYQ42P8	REMQ10P8 + REMQ16P8 + REMQ16P8	3154	0,22
REYQ44P8	REMQ12P8 + REMQ16P8 + REMQ16P8	3170	0,22
REYQ46P8	REMQ14P8 + REMQ16P8 + REMQ16P8	3340	0,22
REYQ48P8	REMQ16P8 + REMQ16P8 + REMQ16P8	3340	0,22

Notes

1 In accordance with EN/IEC 61000-3-11 (1), respectively EN/IEC 61000-3-12 (2), it may be necessary to consult the distribution network operator to ensure that the equipment is connected only to a supply with Z_{SYS}(4) ≤ Z_{MAX}, respectively S_{sc}(3) ≥ minimum S_{sc} value

2 (1) European/international technical standard setting the limits for voltage changes, voltage fluctuations and flicker in public low-voltage supply systems for equipment with rated ≤ 75A.

(2) European/international technical standard setting the limits for harmonic currents produced by equipment connected to public low-voltage system with input current > 16A and ≤ 75A per phase.

(3) Short-circuit power

(4) System impendance

4TW30661-1

3 Options

REYQ8,12P9

REYQ10,14,16P8

No	Item		REYQ8P9	REYQ10P8	REYQ12P9	REYQ14P8	REYQ16P8
1	Refnet header		KHRQ23M29H				
					KHRQ23M64H		
2	Refnet Joint		KHRQ23M20T				
			KHRQ23M29T				
					KHRQ23M64T		
3	Central drain pan kit		KWC25C450				
4	Digital pressure gauga kit		BHGP26A1				
5			BSVQ100P				
			BSVQ160P				
			BSVQ250P				
6	Central BSV4Q Box (See note4)		BSV4Q100P				
7	Wind cover (See Note2)	Left / Suction	KPS26C504L				
		Right / Suction	KPS26C504R				
		Full set	KPS25C450				
		Top / discharge	KPS25C450T				
		Rear / Suction	KPS25C450B				
8	Sound reduction kit for BSVQ100P		EKBSVQLNP (See note 3)				

4TW30329-1B

NOTES

1 All options are kits
2 Only required for technical cooling (outdoor temp <-5°C).
3 Only available for standard BSVQ boxes (not possible for central BSV4Q).
Allows to reduce operating sound of BSVQ-box (requires 1 sound kit per BSVQ-box)
4 Factory pre-assembly of 4xBSVQ100P.

REYQ18,20,34,36P9

REYQ22,24,26,28,30,32,38,40,42,44,48P8

			REYQ18~48P Multi combination of REMQ~16P						
	Description		REMQ8P9	REMQ10P8	REMQ12P9	REMHQ12P9 REMQ14P8	REMQ16P8	2-unit multi	3-unit multi
	Refnet header	KHRQ23M29H	o	o	o	o	o	o	o
		KHRQ23M64H	-	-	o	o	o	o	o
		KHRQ23M75H	-	-	-	-	-	o	o
	Refnet joint	KHRQ23M20T	o	o	o	o	o	o	o
		KHRQ23M29T9	o	o	o	o	o	o	o
		KHRQ23M64T	-	-	o	o	o	o	o
		KHRQ23M75T	-	-	-	-	-	o	o
	Ountdoor unit multipiping connection kit for H/R	BHFQ23P907	-	-	-	-	-	o	-
		BHFQ23P1357	-	-	-	-	-	-	o
	Central drain pan kit	KWC26C280	o	o	o	-	-	See note 4	See note 4
		KWC26C450	-	-	-	o	o	See note 4	See note 4
	Digital pressure gauge kit (See note 2)	BHGP26A1	o	o	o	o	o	-	-
	BS box for H/R	BSVQ100P	o	o	o	o	o	o	o
		BSVQ160P	o	o	o	o	o	o	o
		BSVQ250P	o	o	o	o	o	o	o
	Central BSVQ box (See note 6)	BSV4Q100P	o	o	o	o	o	o	o
	Sound reduction kit for BSVQ box (See note 3)	EKBSVQLNP	o	o	o	o	o	o	o
Wind cover (See note 5)	Full set REMQ8-12	KPS26C280	o	o	o	-	-	-	-
	Full set REMQ14-16 + REMHQ12	KPS26C504	-	-	-	o	o	-	-
	Top/discharge for REMQ8-12	KPS26C280T	o	o	o	-	-	See note 4	See note 4
	Top/discharge for REMQ14-16 + REMHQ12	KPS26C504T	-	-	-	o	o	See note 4	See note 4
	Left/suction for REMQ8-16 + REMHQ	KPS26C504L	o	o	o	o	o	See note 4	See note 4
	Right/suction for REMQ8-16 + REMHQ	KPS26C504R	o	o	o	o	o	See note 4	See note 4
	Rear/suction REMQ8-12P	KPS26C280B	o	o	o	-	-	See note 4	See note 4
	Rear/suction REMQ14-16 + REMHQ12	KPS26C504B	-	-	-	o	o	See note 4	See note 4

4TW29111-4B

NOTES

1 All options are kits
2 Only 1 option per installation is needed.
3 Only available for standard BSVQ boxes (not possible for central BSV4Q).
Allows to reduce operating sound of BSVQ-box (requires 1 sound kit per BSVQ-box)
4 To be combined based on the outdoor multi connection table.
5 Only required for technical cooling (outdoor temp < -5°C).
6 Factory pre-assembly of 4xBSVQ100P

4 Capacity tables

4 - 1 Combination table

REYQ-P8/P9

Multi combination TW drawing overview

HP	REMQ8P9	REMQ10P8	REMQ12P9	REMQ14P8	REMQ16P9
18	1	1			
20	1		1		
22		1	1		
24			2		
26		1			1
28			1		1
30				1	1
32					2
34	1	1			1
36	1		1		1
38		1	1		1
40			2		1
42		1			2
44			1		2
46				1	2
48					3

4TW29111-1

4 Capacity tables

4 - 2 Cooling capacity tables

REYQ8P9

TC: Total Capacity: kW ; PI: Power Input: kW (compressor + outdoor fan motor)

Combination (%)	Capacity index (kW)	Outdoor air temp. (°CDB)	Indoor air temperature: 14.0 °CWB 20.0 °CDB TC kW	14.0 °CWB 20.0 °CDB PI kW	16.0 °CWB 23.0 °CDB TC kW	16.0 °CWB 23.0 °CDB PI kW	18.0 °CWB 26.0 °CDB TC kW	18.0 °CWB 26.0 °CDB PI kW	19.0 °CWB 27.0 °CDB TC kW	19.0 °CWB 27.0 °CDB PI kW	20.0 °CWB 28.0 °CDB TC kW	20.0 °CWB 28.0 °CDB PI kW	22.0 °CWB 30.0 °CDB TC kW	22.0 °CWB 30.0 °CDB PI kW	24.0 °CWB 32.0 °CDB TC kW	24.0 °CWB 32.0 °CDB PI kW
130	260 (29.12)	10	19.7	2.39	23.4	2.93	27.2	3.49	28.2	3.49	28.6	3.49	29.3	3.49	30.0	3.49
		12	19.7	2.44	23.4	2.99	27.2	3.55	27.8	3.55	28.2	3.55	28.9	3.55	29.6	3.55
		14	19.7	2.48	23.4	3.04	27.1	3.60	27.5	3.60	27.8	3.60	28.5	3.60	29.3	3.60
		16	19.7	2.53	23.4	3.10	26.8	3.58	27.1	3.59	27.5	3.59	28.2	3.60	28.9	3.60
		18	19.7	2.58	23.4	3.16	26.4	3.72	26.8	3.73	27.1	3.75	27.8	3.79	28.5	3.83
		20	19.7	2.63	23.4	3.37	26.0	3.90	26.4	3.92	26.7	3.94	27.5	3.98	28.2	4.01
		21	19.7	2.71	23.4	3.49	25.9	3.99	26.2	4.01	26.6	4.03	27.3	4.07	28.0	4.11
		23	19.7	2.90	23.4	3.74	25.5	4.17	25.8	4.19	26.2	4.21	26.9	4.26	27.6	4.30
		25	19.7	3.10	23.4	4.01	25.1	4.35	25.5	4.38	25.8	4.40	26.5	4.44	27.3	4.49
		27	19.7	3.31	23.4	4.29	24.8	4.54	25.1	4.56	25.5	4.58	26.2	4.63	26.9	4.68
		29	19.7	3.53	23.4	4.58	24.4	4.72	24.8	4.74	25.1	4.77	25.8	4.82	26.5	4.87
		31	19.7	3.77	23.3	4.85	24.0	4.90	24.4	4.93	24.7	4.96	25.5	5.01	26.2	5.07
		33	19.7	4.02	23.0	5.03	23.7	5.09	24.0	5.12	24.4	5.15	25.1	5.20	25.8	5.26
		35	19.7	4.28	22.6	5.22	23.3	5.28	23.7	5.31	24.0	5.34	24.7	5.40	25.4	5.46
		37	19.7	4.56	22.2	5.40	22.9	5.46	23.3	5.50	23.6	5.53	24.4	5.59	25.1	5.65
		39	19.7	4.85	21.9	5.59	22.6	5.65	22.9	5.69	23.3	5.72	24.0	5.78	24.7	5.85
120	240 (26.88)	10	18.1	2.19	21.6	2.67	25.1	3.18	26.9	3.44	28.1	3.44	28.8	3.44	29.4	3.44
		12	18.1	2.23	21.6	2.72	25.1	3.24	26.9	3.50	27.8	3.50	28.4	3.50	29.1	3.50
		14	18.1	2.27	21.6	2.77	25.1	3.30	26.9	3.57	27.4	3.57	28.0	3.57	28.7	3.57
		16	18.1	2.31	21.6	2.83	25.1	3.36	26.7	3.59	27.0	3.59	27.7	3.60	28.3	3.60
		18	18.1	2.36	21.6	2.88	25.1	3.48	26.3	3.71	26.7	3.73	27.3	3.76	28.0	3.80
		20	18.1	2.40	21.6	3.00	25.1	3.74	26.0	3.89	26.3	3.91	27.0	3.95	27.6	3.98
		21	18.1	2.43	21.6	3.11	25.1	3.88	25.8	3.98	26.1	4.00	26.8	4.04	27.4	4.08
		23	18.1	2.59	21.6	3.33	25.1	4.15	25.4	4.17	25.8	4.19	26.4	4.23	27.1	4.26
		25	18.1	2.77	21.6	3.56	24.7	4.33	25.1	4.35	25.4	4.37	26.0	4.41	26.7	4.45
		27	18.1	2.96	21.6	3.81	24.4	4.51	24.7	4.53	25.0	4.55	25.7	4.60	26.3	4.64
		29	18.1	3.15	21.6	4.07	24.0	4.69	24.3	4.72	24.7	4.74	25.3	4.79	26.0	4.83
		31	18.1	3.36	21.6	4.34	23.6	4.87	24.0	4.90	24.3	4.92	24.9	4.97	25.6	5.02
		33	18.1	3.58	21.6	4.63	23.3	5.06	23.6	5.08	23.9	5.11	24.6	5.16	25.2	5.22
		35	18.1	3.81	21.6	4.94	22.9	5.24	23.2	5.27	23.6	5.30	24.2	5.35	24.9	5.41
		37	18.1	4.06	21.6	5.26	22.5	5.43	22.9	5.46	23.2	5.49	23.9	5.55	24.5	5.60
		39	18.1	4.32	21.5	5.55	22.2	5.62	22.5	5.65	22.8	5.68	23.5	5.74	24.1	5.80
110	220 (24.64)	10	16.6	1.99	19.8	2.42	23.0	2.87	24.6	3.11	26.2	3.34	28.3	3.42	28.9	3.42
		12	16.6	2.02	19.8	2.46	23.0	2.93	24.6	3.16	26.2	3.40	27.9	3.48	28.5	3.48
		14	16.6	2.06	19.8	2.51	23.0	2.98	24.6	3.22	26.2	3.47	27.5	3.55	28.1	3.55
		16	16.6	2.10	19.8	2.56	23.0	3.04	24.6	3.29	26.2	3.54	27.2	3.60	27.8	3.60
		18	16.6	2.14	19.8	2.61	23.0	3.10	24.6	3.38	26.2	3.71	26.8	3.74	27.4	3.77
		20	16.6	2.18	19.8	2.66	23.0	3.29	24.6	3.63	25.9	3.89	26.5	3.92	27.1	3.95
		21	16.6	2.20	19.8	2.74	23.0	3.40	24.6	3.76	25.7	3.98	26.3	4.01	26.9	4.05
		23	16.6	2.30	19.8	2.94	23.0	3.65	24.6	4.03	25.3	4.16	25.9	4.20	26.5	4.23
		25	16.6	2.46	19.8	3.14	23.0	3.91	24.6	4.32	24.9	4.34	25.5	4.38	26.1	4.42
		27	16.6	2.62	19.8	3.35	23.0	4.18	24.3	4.50	24.6	4.52	25.2	4.56	25.8	4.60
		29	16.6	2.80	19.8	3.58	23.0	4.46	23.9	4.69	24.2	4.71	24.8	4.75	25.4	4.79
		31	16.6	2.98	19.8	3.82	23.0	4.77	23.5	4.87	23.8	4.89	24.4	4.94	25.0	4.98
		33	16.6	3.17	19.8	4.07	22.9	5.03	23.2	5.05	23.5	5.08	24.1	5.12	24.7	5.17
		35	16.6	3.37	19.8	4.34	22.5	5.21	22.8	5.24	23.1	5.26	23.7	5.31	24.3	5.36
		37	16.6	3.59	19.8	4.62	22.2	5.39	22.5	5.42	22.8	5.45	23.4	5.50	24.0	5.55
		39	16.6	3.81	19.8	4.92	21.8	5.58	22.1	5.61	22.4	5.63	23.0	5.69	23.6	5.75
100	200 (22.40)	10	15.1	1.79	18.0	2.17	20.9	2.57	22.4	2.78	23.9	2.99	26.8	3.42	28.3	3.42
		12	15.1	1.82	18.0	2.21	20.9	2.62	22.4	2.83	23.9	3.05	26.8	3.48	28.0	3.48
		14	15.1	1.86	18.0	2.25	20.9	2.67	22.4	2.89	23.9	3.11	26.8	3.55	27.6	3.55
		16	15.1	1.89	18.0	2.30	20.9	2.72	22.4	2.94	23.9	3.17	26.7	3.60	27.2	3.60
		18	15.1	1.92	18.0	2.34	20.9	2.78	22.4	3.00	23.9	3.23	26.3	3.71	26.9	3.74
		20	15.1	1.96	18.0	2.39	20.9	2.86	22.4	3.15	23.9	3.46	26.0	3.89	26.5	3.92
		21	15.1	1.98	18.0	2.41	20.9	2.96	22.4	3.27	23.9	3.58	25.8	3.98	26.3	4.01
		23	15.1	2.03	18.0	2.57	20.9	3.17	22.4	3.50	23.9	3.84	25.4	4.16	26.0	4.20
		25	15.1	2.17	18.0	2.75	20.9	3.40	22.4	3.75	23.9	4.12	25.0	4.35	25.6	4.38
		27	15.1	2.31	18.0	2.93	20.9	3.63	22.4	4.01	23.9	4.40	24.7	4.53	25.2	4.57
		29	15.1	2.46	18.0	3.13	20.9	3.88	22.4	4.28	23.8	4.67	24.3	4.71	24.9	4.75
		31	15.1	2.62	18.0	3.33	20.9	4.14	22.4	4.57	23.4	4.86	23.9	4.90	24.5	4.94
		33	15.1	2.78	18.0	3.55	20.9	4.41	22.4	4.88	23.0	5.04	23.6	5.08	24.1	5.13
		35	15.1	2.96	18.0	3.78	20.9	4.70	22.4	5.20	22.7	5.22	23.2	5.27	23.8	5.31
		37	15.1	3.14	18.0	4.02	20.9	5.01	22.0	5.38	22.3	5.41	22.9	5.46	23.4	5.50
		39	15.1	3.34	18.0	4.28	20.9	5.33	21.7	5.57	21.9	5.59	22.5	5.64	23.0	5.69

4TW31482-1A

NOTES - ANMERKUNGEN - Σημειώσεις - NOTAS - REMARQUES - NOTE - OPMERKINGEN - примечания - NOTLAR

1 The above table shows the average value of conditions which may occur.
Die obige Tabelle zeigt den Durchschnittswert der Bedingungen, die auftreten können.
Στον παραπάνω πίνακα αναγράφεται η μέση τιμή για συνθήκες που μπορεί να προκύψουν.
La tabla de arriba muestra el valor medio de condiciones que pueden ocurrir.
Le tableau ci-dessus donne la valeur moyenne pour des conditions qui peuvent survenir.
La tabella in alto mostra il valore delle condizioni medie che si possono riscontrare.
De tabel hierboven geeft de gemiddelde waarde aan van situaties die kunnen voorvallen.
Таблица расположенная выше показывает среднее значение условий, которые могут наступить.
Yukarıdaki tablo meydana gelebilecek koşulların ortalama değerini göstermektedir.

4 Capacity tables

4 - 2 Cooling capacity tables

REYQ8P9

TC: Total Capacity: kW ; PI: Power Input: kW (compressor + outdoor fan motor)

Combination (%)	Capacity index (kW)	Outdoor air temp. (°CDB)	Indoor air temperature: 14.0 °CWB / 20.0 °CDB		16.0 °CWB / 23.0 °CDB		18.0 °CWB / 26.0 °CDB		19.0 °CWB / 27.0 °CDB		20.0 °CWB / 28.0 °CDB		22.0 °CWB / 30.0 °CDB		24.0 °CWB / 32.0 °CDB	
			TC	PI	TC	PI	TC	PI	TC	PI	TC	PI	TC	PI	TC	PI
			kW	kW	kW	kW	kW	kW	kW	kW	kW	kW	kW	kW	kW	kW
90	180 (20.16)	10	13.6	1.60	16.2	1.93	18.9	2.28	20.2	2.46	21.5	2.65	24.1	3.03	26.7	3.41
		12	13.6	1.63	16.2	1.97	18.9	2.33	20.2	2.51	21.5	2.70	24.1	3.08	26.7	3.47
		14	13.6	1.66	16.2	2.00	18.9	2.37	20.2	2.56	21.5	2.75	24.1	3.14	26.7	3.54
		16	13.6	1.69	16.2	2.04	18.9	2.41	20.2	2.61	21.5	2.80	24.1	3.20	26.7	3.60
		18	13.6	1.72	16.2	2.08	18.9	2.46	20.2	2.66	21.5	2.86	24.1	3.27	26.3	3.71
		20	13.6	1.75	16.2	2.12	18.9	2.51	20.2	2.71	21.5	2.97	24.1	3.51	25.9	3.89
		21	13.6	1.77	16.2	2.14	18.9	2.55	20.2	2.81	21.5	3.07	24.1	3.64	25.8	3.98
		23	13.6	1.80	16.2	2.23	18.9	2.73	20.2	3.01	21.5	3.29	24.1	3.90	25.4	4.16
		25	13.6	1.90	16.2	2.38	18.9	2.92	20.2	3.21	21.5	3.52	24.1	4.18	25.0	4.35
		27	13.6	2.02	16.2	2.54	18.9	3.12	20.2	3.43	21.5	3.76	24.1	4.47	24.7	4.53
		29	13.6	2.15	16.2	2.71	18.9	3.33	20.2	3.67	21.5	4.02	23.8	4.68	24.3	4.71
		31	13.6	2.28	16.2	2.88	18.9	3.55	20.2	3.91	21.5	4.29	23.4	4.86	23.9	4.90
		33	13.6	2.43	16.2	3.07	18.9	3.78	20.2	4.17	21.5	4.58	23.1	5.04	23.6	5.08
		35	13.6	2.58	16.2	3.26	18.9	4.03	20.2	4.44	21.5	4.88	22.7	5.23	23.2	5.27
		37	13.6	2.73	16.2	3.47	18.9	4.29	20.2	4.73	21.5	5.20	22.4	5.41	22.8	5.46
		39	13.6	2.90	16.2	3.68	18.9	4.56	20.2	5.04	21.5	5.54	22.0	5.60	22.5	5.64
80	160 (17.92)	10	12.1	1.42	14.4	1.70	16.8	2.00	17.9	2.16	19.1	2.32	21.4	2.64	23.7	2.98
		12	12.1	1.45	14.4	1.73	16.8	2.04	17.9	2.20	19.1	2.36	21.4	2.69	23.7	3.03
		14	12.1	1.47	14.4	1.76	16.8	2.08	17.9	2.24	19.1	2.40	21.4	2.74	23.7	3.09
		16	12.1	1.50	14.4	1.80	16.8	2.12	17.9	2.28	19.1	2.45	21.4	2.80	23.7	3.15
		18	12.1	1.52	14.4	1.83	16.8	2.16	17.9	2.32	19.1	2.50	21.4	2.85	23.7	3.21
		20	12.1	1.55	14.4	1.86	16.8	2.20	17.9	2.37	19.1	2.55	21.4	2.95	23.7	3.44
		21	12.1	1.56	14.4	1.88	16.8	2.22	17.9	2.39	19.1	2.60	21.4	3.06	23.7	3.56
		23	12.1	1.59	14.4	1.92	16.8	2.33	17.9	2.55	19.1	2.78	21.4	3.28	23.7	3.82
		25	12.1	1.64	14.4	2.04	16.8	2.48	17.9	2.72	19.1	2.97	21.4	3.51	23.7	4.09
		27	12.1	1.75	14.4	2.17	16.8	2.65	17.9	2.91	19.1	3.18	21.4	3.75	23.7	4.37
		29	12.1	1.86	14.4	2.31	16.8	2.83	17.9	3.10	19.1	3.39	21.4	4.00	23.7	4.67
		31	12.1	1.97	14.4	2.46	16.8	3.01	17.9	3.30	19.1	3.61	21.4	4.27	23.4	4.86
		33	12.1	2.09	14.4	2.62	16.8	3.20	17.9	3.52	19.1	3.85	21.4	4.56	23.0	5.04
		35	12.1	2.22	14.4	2.78	16.8	3.41	17.9	3.75	19.1	4.10	21.4	4.86	22.7	5.22
		37	12.1	2.35	14.4	2.95	16.8	3.62	17.9	3.99	19.1	4.37	21.4	5.18	22.3	5.41
		39	12.1	2.49	14.4	3.13	16.8	3.85	17.9	4.24	19.1	4.65	21.4	5.52	21.9	5.59
70	140 (15.68)	10	10.6	1.25	12.6	1.49	14.7	1.73	15.7	1.86	16.7	2.00	18.7	2.27	20.8	2.55
		12	10.6	1.27	12.6	1.51	14.7	1.76	15.7	1.90	16.7	2.03	18.7	2.31	20.8	2.60
		14	10.6	1.29	12.6	1.54	14.7	1.80	15.7	1.93	16.7	2.07	18.7	2.35	20.8	2.65
		16	10.6	1.31	12.6	1.56	14.7	1.83	15.7	1.97	16.7	2.11	18.7	2.40	20.8	2.70
		18	10.6	1.33	12.6	1.59	14.7	1.86	15.7	2.00	16.7	2.15	18.7	2.45	20.8	2.75
		20	10.6	1.36	12.6	1.62	14.7	1.90	15.7	2.04	16.7	2.19	18.7	2.49	20.8	2.83
		21	10.6	1.37	12.6	1.63	14.7	1.91	15.7	2.06	16.7	2.21	18.7	2.53	20.8	2.93
		23	10.6	1.39	12.6	1.66	14.7	1.95	15.7	2.13	16.7	2.32	18.7	2.71	20.8	3.14
		25	10.6	1.42	12.6	1.73	14.7	2.08	15.7	2.27	16.7	2.47	18.7	2.90	20.8	3.36
		27	10.6	1.50	12.6	1.84	14.7	2.22	15.7	2.43	16.7	2.64	18.7	3.09	20.8	3.59
		29	10.6	1.59	12.6	1.96	14.7	2.36	15.7	2.58	16.7	2.81	18.7	3.30	20.8	3.83
		31	10.6	1.68	12.6	2.08	14.7	2.52	15.7	2.75	16.7	3.00	18.7	3.52	20.8	4.09
		33	10.6	1.78	12.6	2.21	14.7	2.67	15.7	2.93	16.7	3.19	18.7	3.75	20.8	4.36
		35	10.6	1.89	12.6	2.34	14.7	2.84	15.7	3.11	16.7	3.39	18.7	3.99	20.8	4.65
		37	10.6	2.00	12.6	2.48	14.7	3.02	15.7	3.31	16.7	3.61	18.7	4.25	20.8	4.95
		39	10.6	2.12	12.6	2.63	14.7	3.20	15.7	3.51	16.7	3.83	18.7	4.52	20.8	5.27
60	120 (13.44)	10	9.07	1.09	10.8	1.28	12.6	1.48	13.4	1.58	14.3	1.69	16.1	1.91	17.8	2.14
		12	9.07	1.10	10.8	1.30	12.6	1.50	13.4	1.61	14.3	1.72	16.1	1.95	17.8	2.18
		14	9.07	1.12	10.8	1.32	12.6	1.53	13.4	1.64	14.3	1.75	16.1	1.98	17.8	2.22
		16	9.07	1.14	10.8	1.34	12.6	1.55	13.4	1.67	14.3	1.78	16.1	2.02	17.8	2.26
		18	9.07	1.15	10.8	1.36	12.6	1.58	13.4	1.70	14.3	1.81	16.1	2.06	17.8	2.31
		20	9.07	1.17	10.8	1.39	12.6	1.61	13.4	1.73	14.3	1.85	16.1	2.10	17.8	2.35
		21	9.07	1.18	10.8	1.40	12.6	1.63	13.4	1.74	14.3	1.87	16.1	2.12	17.8	2.38
		23	9.07	1.20	10.8	1.42	12.6	1.66	13.4	1.78	14.3	1.90	16.1	2.20	17.8	2.53
		25	9.07	1.22	10.8	1.45	12.6	1.72	13.4	1.87	14.3	2.02	16.1	2.35	17.8	2.70
		27	9.07	1.27	10.8	1.53	12.6	1.83	13.4	1.99	14.3	2.15	16.1	2.50	17.8	2.88
		29	9.07	1.34	10.8	1.63	12.6	1.95	13.4	2.12	14.3	2.29	16.1	2.67	17.8	3.07
		31	9.07	1.42	10.8	1.73	12.6	2.07	13.4	2.25	14.3	2.44	16.1	2.84	17.8	3.28
		33	9.07	1.50	10.8	1.83	12.6	2.19	13.4	2.39	14.3	2.59	16.1	3.02	17.8	3.49
		35	9.07	1.59	10.8	1.94	12.6	2.33	13.4	2.54	14.3	2.75	16.1	3.21	17.8	3.71
		37	9.07	1.68	10.8	2.05	12.6	2.47	13.4	2.69	14.3	2.92	16.1	3.42	17.8	3.95
		39	9.07	1.77	10.8	2.17	12.6	2.62	13.4	2.85	14.3	3.10	16.1	3.63	17.8	4.20
50	100 (11.20)	10	7.56	.94	9.02	1.08	10.5	1.24	11.2	1.32	11.9	1.40	13.4	1.58	14.8	1.76
		12	7.56	.95	9.02	1.10	10.5	1.26	11.2	1.34	11.9	1.43	13.4	1.60	14.8	1.79
		14	7.56	.96	9.02	1.11	10.5	1.28	11.2	1.36	11.9	1.45	13.4	1.63	14.8	1.82
		16	7.56	.97	9.02	1.13	10.5	1.30	11.2	1.39	11.9	1.48	13.4	1.66	14.8	1.85
		18	7.56	.99	9.02	1.15	10.5	1.32	11.2	1.41	11.9	1.50	13.4	1.69	14.8	1.89
		20	7.56	1.00	9.02	1.17	10.5	1.34	11.2	1.43	11.9	1.53	13.4	1.72	14.8	1.92
		21	7.56	1.01	9.02	1.18	10.5	1.35	11.2	1.45	11.9	1.54	13.4	1.74	14.8	1.94
		23	7.56	1.02	9.02	1.19	10.5	1.38	11.2	1.47	11.9	1.57	13.4	1.77	14.8	1.98
		25	7.56	1.04	9.02	1.21	10.5	1.40	11.2	1.50	11.9	1.62	13.4	1.86	14.8	2.12
		27	7.56	1.06	9.02	1.26	10.5	1.48	11.2	1.60	11.9	1.72	13.4	1.98	14.8	2.26
		29	7.56	1.12	9.02	1.33	10.5	1.57	11.2	1.70	11.9	1.83	13.4	2.10	14.8	2.40
		31	7.56	1.18	9.02	1.41	10.5	1.66	11.2	1.80	11.9	1.94	13.4	2.24	14.8	2.56
		33	7.56	1.25	9.02	1.49	10.5	1.76	11.2	1.91	11.9	2.06	13.4	2.38	14.8	2.72
		35	7.56	1.32	9.02	1.58	10.5	1.87	11.2	2.02	11.9	2.18	13.4	2.52	14.8	2.89
		37	7.56	1.39	9.02	1.67	10.5	1.98	11.2	2.14	11.9	2.31	13.4	2.68	14.8	3.07
		39	7.56	1.46	9.02	1.76	10.5	2.09	11.2	2.27	11.9	2.45	13.4	2.84	14.8	3.26

4TW31482-1A

4 Capacity tables

4 - 2 Cooling capacity tables

REYQ10P8

TC: Total Capacity: kW ; PI: Power Input: kW (compressor + outdoor fan motor)

Combination (%)	Capacity index (kW)	Outdoor air temp. (°CDB)	Indoor air temperature: 14.0 °CWB 20.0 °CDB TC kW	14.0 °CWB 20.0 °CDB PI kW	16.0 °CWB 23.0 °CDB TC kW	16.0 °CWB 23.0 °CDB PI kW	18.0 °CWB 26.0 °CDB TC kW	18.0 °CWB 26.0 °CDB PI kW	19.0 °CWB 27.0 °CDB TC kW	19.0 °CWB 27.0 °CDB PI kW	20.0 °CWB 28.0 °CDB TC kW	20.0 °CWB 28.0 °CDB PI kW	22.0 °CWB 30.0 °CDB TC kW	22.0 °CWB 30.0 °CDB PI kW	24.0 °CWB 32.0 °CDB TC kW	24.0 °CWB 32.0 °CDB PI kW
130	325 (36.40)	10	24.6	3.26	29.3	4.00	34.0	4.75	35.3	4.75	35.7	4.75	36.6	4.75	37.5	4.75
		12	24.6	3.32	29.3	4.07	34.0	4.84	34.8	4.84	35.3	4.84	36.1	4.84	37.0	4.84
		14	24.6	3.39	29.3	4.15	33.9	4.90	34.4	4.90	34.8	4.90	35.7	4.90	36.6	4.90
		16	24.6	3.45	29.3	4.23	33.5	4.88	33.9	4.90	34.3	4.90	35.2	4.90	36.1	4.91
		18	24.6	3.52	29.3	4.31	33.0	5.07	33.4	5.09	33.9	5.12	34.8	5.17	35.7	5.22
		20	24.6	3.59	29.3	4.60	32.5	5.31	33.0	5.34	33.4	5.37	34.3	5.42	35.2	5.47
		21	24.6	3.69	29.3	4.76	32.3	5.44	32.8	5.47	33.2	5.49	34.1	5.55	35.0	5.60
		23	24.6	3.95	29.3	5.10	31.9	5.69	32.3	5.71	32.7	5.74	33.6	5.80	34.5	5.86
		25	24.6	4.23	29.3	5.47	31.4	5.93	31.9	5.97	32.3	6.00	33.2	6.06	34.1	6.12
		27	24.6	4.51	29.3	5.85	31.0	6.18	31.4	6.22	31.8	6.25	32.7	6.31	33.6	6.38
		29	24.6	4.82	29.3	6.25	30.5	6.44	30.9	6.47	31.4	6.50	32.3	6.57	33.2	6.64
		31	24.6	5.14	29.2	6.61	30.0	6.69	30.5	6.72	30.9	6.76	31.8	6.83	32.7	6.91
		33	24.6	5.48	28.7	6.86	29.6	6.94	30.0	6.98	30.5	7.02	31.4	7.09	32.2	7.17
		35	24.6	5.83	28.2	7.11	29.1	7.19	29.6	7.23	30.0	7.28	30.9	7.36	31.8	7.44
		37	24.6	6.21	27.8	7.36	28.7	7.45	29.1	7.49	29.6	7.54	30.4	7.62	31.3	7.71
		39	24.6	6.61	27.3	7.62	28.2	7.71	28.7	7.75	29.1	7.80	30.0	7.89	30.9	7.98
120	300 (33.60)	10	22.7	2.98	27.0	3.64	31.4	4.33	33.6	4.68	35.2	4.68	36.0	4.68	36.8	4.68
		12	22.7	3.04	27.0	3.71	31.4	4.41	33.6	4.77	34.7	4.77	35.5	4.77	36.3	4.77
		14	22.7	3.09	27.0	3.78	31.4	4.50	33.6	4.86	34.2	4.86	35.1	4.86	35.9	4.86
		16	22.7	3.15	27.0	3.86	31.4	4.59	33.4	4.90	33.8	4.90	34.6	4.90	35.4	4.91
		18	22.7	3.21	27.0	3.93	31.4	4.74	32.9	5.06	33.3	5.09	34.1	5.13	35.0	5.18
		20	22.7	3.28	27.0	4.09	31.4	5.10	32.5	5.31	32.9	5.33	33.7	5.38	34.5	5.43
		21	22.7	3.31	27.0	4.23	31.4	5.28	32.2	5.43	32.6	5.46	33.5	5.51	34.3	5.56
		23	22.7	3.53	27.0	4.54	31.4	5.65	31.8	5.68	32.2	5.71	33.0	5.76	33.8	5.81
		25	22.7	3.78	27.0	4.85	30.9	5.90	31.3	5.93	31.7	5.96	32.6	6.01	33.4	6.07
		27	22.7	4.03	27.0	5.19	30.5	6.15	30.9	6.18	31.3	6.21	32.1	6.27	32.9	6.33
		29	22.7	4.30	27.0	5.54	30.0	6.40	30.4	6.43	30.8	6.46	31.6	6.52	32.5	6.59
		31	22.7	4.58	27.0	5.92	29.6	6.65	30.0	6.68	30.4	6.71	31.2	6.78	32.0	6.85
		33	22.7	4.88	27.0	6.31	29.1	6.90	29.5	6.93	29.9	6.97	30.7	7.04	31.5	7.11
		35	22.7	5.20	27.0	6.73	28.6	7.15	29.0	7.19	29.5	7.22	30.3	7.30	31.1	7.37
		37	22.7	5.53	27.0	7.17	28.2	7.40	28.6	7.44	29.0	7.48	29.8	7.56	30.6	7.64
		39	22.7	5.88	26.9	7.57	27.7	7.66	28.1	7.70	28.5	7.74	29.4	7.82	30.2	7.91
110	275 (30.80)	10	20.8	2.71	24.8	3.30	28.8	3.92	30.8	4.23	32.8	4.56	35.3	4.66	36.1	4.66
		12	20.8	2.76	24.8	3.36	28.8	3.99	30.8	4.31	32.8	4.64	34.9	4.75	35.6	4.75
		14	20.8	2.81	24.8	3.42	28.8	4.07	30.8	4.40	32.8	4.73	34.4	4.84	35.2	4.84
		16	20.8	2.86	24.8	3.49	28.8	4.15	30.8	4.48	32.8	4.82	34.0	4.90	34.7	4.91
		18	20.8	2.91	24.8	3.56	28.8	4.23	30.8	4.61	32.8	5.05	33.5	5.10	34.3	5.14
		20	20.8	2.97	24.8	3.63	28.8	4.48	30.8	4.95	32.3	5.30	33.1	5.35	33.8	5.39
		21	20.8	3.00	24.8	3.74	28.8	4.64	30.8	5.13	32.1	5.42	32.8	5.47	33.6	5.52
		23	20.8	3.14	24.8	4.00	28.8	4.97	30.8	5.50	31.6	5.67	32.4	5.72	33.1	5.77
		25	20.8	3.35	24.8	4.28	28.8	5.33	30.8	5.89	31.2	5.92	31.9	5.97	32.7	6.02
		27	20.8	3.58	24.8	4.57	28.8	5.70	30.3	6.14	30.7	6.17	31.5	6.22	32.2	6.28
		29	20.8	3.81	24.8	4.88	28.8	6.09	29.9	6.39	30.3	6.42	31.0	6.48	31.8	6.53
		31	20.8	4.06	24.8	5.21	28.8	6.50	29.4	6.64	29.8	6.67	30.6	6.73	31.3	6.79
		33	20.8	4.32	24.8	5.55	28.6	6.85	29.0	6.89	29.4	6.92	30.1	6.99	30.9	7.05
		35	20.8	4.60	24.8	5.91	28.2	7.10	28.5	7.14	28.9	7.17	29.6	7.24	30.4	7.31
		37	20.8	4.89	24.8	6.30	27.7	7.35	28.1	7.39	28.4	7.43	29.2	7.50	29.9	7.57
		39	20.8	5.20	24.8	6.71	27.2	7.61	27.6	7.64	28.0	7.68	28.7	7.76	29.5	7.84
100	250 (28.00)	10	18.9	2.44	22.5	2.96	26.2	3.51	28.0	3.79	29.8	4.08	33.5	4.66	35.4	4.66
		12	18.9	2.49	22.5	3.02	26.2	3.58	28.0	3.86	29.8	4.16	33.5	4.75	34.9	4.75
		14	18.9	2.53	22.5	3.07	26.2	3.64	28.0	3.94	29.8	4.24	33.5	4.84	34.5	4.84
		16	18.9	2.58	22.5	3.13	26.2	3.71	28.0	4.01	29.8	4.32	33.4	4.90	34.0	4.91
		18	18.9	2.62	22.5	3.19	26.2	3.79	28.0	4.09	29.8	4.40	32.9	5.06	33.6	5.10
		20	18.9	2.67	22.5	3.25	26.2	3.90	28.0	4.30	29.8	4.72	32.4	5.31	33.1	5.35
		21	18.9	2.70	22.5	3.29	26.2	4.04	28.0	4.45	29.8	4.89	32.2	5.43	32.9	5.47
		23	18.9	2.77	22.5	3.50	26.2	4.33	28.0	4.77	29.8	5.24	31.8	5.68	32.4	5.72
		25	18.9	2.96	22.5	3.75	26.2	4.63	28.0	5.11	29.8	5.61	31.3	5.93	32.0	5.97
		27	18.9	3.15	22.5	4.00	26.2	4.95	28.0	5.46	29.8	6.00	30.8	6.18	31.5	6.23
		29	18.9	3.36	22.5	4.26	26.2	5.28	28.0	5.84	29.7	6.37	30.4	6.43	31.1	6.48
		31	18.9	3.57	22.5	4.54	26.2	5.64	28.0	6.23	29.3	6.62	29.9	6.68	30.6	6.73
		33	18.9	3.80	22.5	4.84	26.2	6.01	28.0	6.65	28.8	6.87	29.5	6.93	30.2	6.99
		35	18.9	4.04	22.5	5.15	26.2	6.41	28.0	7.09	28.3	7.12	29.0	7.18	29.7	7.25
		37	18.9	4.29	22.5	5.48	26.2	6.83	27.5	7.34	27.9	7.37	28.6	7.44	29.2	7.51
		39	18.9	4.55	22.5	5.83	26.2	7.27	27.1	7.59	27.4	7.63	28.1	7.70	28.8	7.76

4TW31482-1A

NOTES - ANMERKUNGEN - Σημειώσεις - NOTAS - REMARQUES - NOTE - OPMERKINGEN - примечания - NOTLAR

1 The above table shows the average value of conditions which may occur.
Die obige Tabelle zeigt den Durchschnittswert der Bedingungen, die auftreten können.
Στον παραπάνω πίνακα αναγράφεται η μέση τιμή για συνθήκες που μπορεί να προκύψουν.
La tabla de arriba muestra el valor medio de condiciones que pueden ocurrir.
Le tableau ci-dessus donne la valeur moyenne pour des conditions qui peuvent survenir.
La tabella in alto mostra il valore delle condizioni medie che si possono riscontrare.
De tabel hierboven geeft de gemiddelde waarde aan van situaties die kunnen voorvallen.
Таблица расположенная выше показывает среднее значение условий, которые могут наступить.
Yukarıdaki tablo meydana gelebilecek koşulların ortalama değerini göstermektedir.

4 Capacity tables

4 - 2 Cooling capacity tables

REYQ10P8

TC: Total Capacity: kW ; PI: Power Input: kW (compressor + outdoor fan motor)

Combination (%)	Capacity index (kW)	Outdoor air temp. (°CDB)	Indoor air temperature: 14.0 °CWB / 20.0 °CDB		16.0 °CWB / 23.0 °CDB		18.0 °CWB / 26.0 °CDB		19.0 °CWB / 27.0 °CDB		20.0 °CWB / 28.0 °CDB		22.0 °CWB / 30.0 °CDB		24.0 °CWB / 32.0 °CDB	
			TC	PI	TC	PI	TC	PI	TC	PI	TC	PI	TC	PI	TC	PI
			kW	kW	kW	kW	kW	kW	kW	kW	kW	kW	kW	kW	kW	kW
90	225 (25.20)	10	17.0	2.19	20.3	2.64	23.6	3.11	25.2	3.36	26.8	3.61	30.1	4.13	33.4	4.65
		12	17.0	2.22	20.3	2.68	23.6	3.17	25.2	3.42	26.8	3.68	30.1	4.20	33.4	4.74
		14	17.0	2.26	20.3	2.73	23.6	3.23	25.2	3.49	26.8	3.75	30.1	4.28	33.4	4.83
		16	17.0	2.30	20.3	2.78	23.6	3.29	25.2	3.56	26.8	3.82	30.1	4.37	33.3	4.91
		18	17.0	2.34	20.3	2.84	23.6	3.36	25.2	3.62	26.8	3.90	30.1	4.45	32.9	5.06
		20	17.0	2.39	20.3	2.89	23.6	3.42	25.2	3.70	26.8	4.04	30.1	4.79	32.4	5.31
		21	17.0	2.41	20.3	2.92	23.6	3.48	25.2	3.83	26.8	4.19	30.1	4.96	32.2	5.43
		23	17.0	2.46	20.3	3.04	23.6	3.73	25.2	4.10	26.8	4.49	30.1	5.32	31.7	5.68
		25	17.0	2.59	20.3	3.25	23.6	3.98	25.2	4.38	26.8	4.80	30.1	5.70	31.3	5.93
		27	17.0	2.75	20.3	3.46	23.6	4.25	25.2	4.68	26.8	5.13	30.1	6.09	30.8	6.18
		29	17.0	2.93	20.3	3.69	23.6	4.54	25.2	5.00	26.8	5.48	29.8	6.38	30.4	6.43
		31	17.0	3.11	20.3	3.93	23.6	4.84	25.2	5.33	26.8	5.85	29.3	6.63	29.9	6.68
		33	17.0	3.31	20.3	4.18	23.6	5.16	25.2	5.68	26.8	6.24	28.9	6.88	29.5	6.93
		35	17.0	3.51	20.3	4.44	23.6	5.49	25.2	6.06	26.8	6.65	28.4	7.13	29.0	7.18
		37	17.0	3.73	20.3	4.73	23.6	5.85	25.2	6.45	26.8	7.09	27.9	7.38	28.6	7.44
		39	17.0	3.95	20.3	5.02	23.6	6.22	25.2	6.87	26.8	7.55	27.5	7.63	28.1	7.69
80	200 (22.40)	10	15.1	1.94	18.0	2.32	20.9	2.73	22.4	2.94	23.9	3.16	26.8	3.60	29.7	4.06
		12	15.1	1.97	18.0	2.36	20.9	2.78	22.4	3.00	23.9	3.22	26.8	3.67	29.7	4.13
		14	15.1	2.01	18.0	2.41	20.9	2.83	22.4	3.05	23.9	3.28	26.8	3.74	29.7	4.21
		16	15.1	2.04	18.0	2.45	20.9	2.88	22.4	3.11	23.9	3.34	26.8	3.81	29.7	4.29
		18	15.1	2.07	18.0	2.49	20.9	2.94	22.4	3.17	23.9	3.40	26.8	3.89	29.7	4.38
		20	15.1	2.11	18.0	2.54	20.9	3.00	22.4	3.23	23.9	3.47	26.8	4.03	29.7	4.69
		21	15.1	2.13	18.0	2.57	20.9	3.03	22.4	3.26	23.9	3.54	26.8	4.17	29.7	4.85
		23	15.1	2.17	18.0	2.61	20.9	3.17	22.4	3.48	23.9	3.79	26.8	4.47	29.7	5.20
		25	15.1	2.24	18.0	2.78	20.9	3.39	22.4	3.71	23.9	4.05	26.8	4.78	29.7	5.57
		27	15.1	2.38	18.0	2.97	20.9	3.61	22.4	3.96	23.9	4.33	26.8	5.11	29.7	5.96
		29	15.1	2.53	18.0	3.16	20.9	3.85	22.4	4.23	23.9	4.62	26.8	5.46	29.7	6.37
		31	15.1	2.69	18.0	3.36	20.9	4.10	22.4	4.51	23.9	4.93	26.8	5.83	29.2	6.62
		33	15.1	2.85	18.0	3.57	20.9	4.37	22.4	4.80	23.9	5.25	26.8	6.22	28.8	6.87
		35	15.1	3.03	18.0	3.79	20.9	4.65	22.4	5.11	23.9	5.59	26.8	6.63	28.3	7.12
		37	15.1	3.21	18.0	4.03	20.9	4.94	22.4	5.43	23.9	5.95	26.8	7.06	27.9	7.37
		39	15.1	3.40	18.0	4.27	20.9	5.25	22.4	5.78	23.9	6.34	26.8	7.52	27.4	7.62
70	175 (19.60)	10	13.2	1.71	15.8	2.03	18.3	2.36	19.6	2.54	20.9	2.72	23.4	3.09	26.0	3.48
		12	13.2	1.73	15.8	2.06	18.3	2.41	19.6	2.59	20.9	2.77	23.4	3.15	26.0	3.54
		14	13.2	1.76	15.8	2.09	18.3	2.45	19.6	2.63	20.9	2.82	23.4	3.21	26.0	3.61
		16	13.2	1.79	15.8	2.13	18.3	2.49	19.6	2.68	20.9	2.87	23.4	3.27	26.0	3.68
		18	13.2	1.82	15.8	2.17	18.3	2.54	19.6	2.73	20.9	2.93	23.4	3.33	26.0	3.75
		20	13.2	1.85	15.8	2.21	18.3	2.59	19.6	2.78	20.9	2.99	23.4	3.40	26.0	3.86
		21	13.2	1.86	15.8	2.23	18.3	2.61	19.6	2.81	20.9	3.01	23.4	3.45	26.0	3.99
		23	13.2	1.90	15.8	2.27	18.3	2.66	19.6	2.91	20.9	3.16	23.4	3.70	26.0	4.28
		25	13.2	1.93	15.8	2.36	18.3	2.84	19.6	3.10	20.9	3.37	23.4	3.95	26.0	4.58
		27	13.2	2.04	15.8	2.51	18.3	3.03	19.6	3.31	20.9	3.60	23.4	4.22	26.0	4.89
		29	13.2	2.17	15.8	2.67	18.3	3.22	19.6	3.52	20.9	3.84	23.4	4.50	26.0	5.22
		31	13.2	2.30	15.8	2.83	18.3	3.43	19.6	3.75	20.9	4.08	23.4	4.80	26.0	5.57
		33	13.2	2.43	15.8	3.01	18.3	3.65	19.6	3.99	20.9	4.35	23.4	5.11	26.0	5.94
		35	13.2	2.58	15.8	3.19	18.3	3.87	19.6	4.24	20.9	4.62	23.4	5.44	26.0	6.33
		37	13.2	2.73	15.8	3.38	18.3	4.11	19.6	4.51	20.9	4.92	23.4	5.80	26.0	6.75
		39	13.2	2.89	15.8	3.59	18.3	4.37	19.6	4.79	20.9	5.23	23.4	6.17	26.0	7.19
60	150 (16.80)	10	11.3	1.48	13.5	1.74	15.7	2.02	16.8	2.16	17.9	2.31	20.1	2.61	22.3	2.92
		12	11.3	1.51	13.5	1.77	15.7	2.05	16.8	2.20	17.9	2.35	20.1	2.65	22.3	2.98
		14	11.3	1.53	13.5	1.80	15.7	2.08	16.8	2.23	17.9	2.39	20.1	2.70	22.3	3.03
		16	11.3	1.55	13.5	1.83	15.7	2.12	16.8	2.27	17.9	2.43	20.1	2.75	22.3	3.09
		18	11.3	1.57	13.5	1.86	15.7	2.16	16.8	2.31	17.9	2.47	20.1	2.80	22.3	3.15
		20	11.3	1.60	13.5	1.89	15.7	2.20	16.8	2.36	17.9	2.52	20.1	2.86	22.3	3.21
		21	11.3	1.61	13.5	1.90	15.7	2.22	16.8	2.38	17.9	2.54	20.1	2.89	22.3	3.24
		23	11.3	1.64	13.5	1.94	15.7	2.26	16.8	2.42	17.9	2.59	20.1	3.00	22.3	3.45
		25	11.3	1.67	13.5	1.97	15.7	2.35	16.8	2.55	17.9	2.76	20.1	3.20	22.3	3.68
		27	11.3	1.73	13.5	2.09	15.7	2.50	16.8	2.71	17.9	2.94	20.1	3.41	22.3	3.93
		29	11.3	1.83	13.5	2.22	15.7	2.65	16.8	2.88	17.9	3.13	20.1	3.64	22.3	4.19
		31	11.3	1.94	13.5	2.36	15.7	2.82	16.8	3.07	17.9	3.32	20.1	3.87	22.3	4.47
		33	11.3	2.05	13.5	2.50	15.7	2.99	16.8	3.26	17.9	3.53	20.1	4.12	22.3	4.76
		35	11.3	2.17	13.5	2.64	15.7	3.17	16.8	3.46	17.9	3.75	20.1	4.38	22.3	5.06
		37	11.3	2.29	13.5	2.80	15.7	3.37	16.8	3.67	17.9	3.98	20.1	4.66	22.3	5.39
		39	11.3	2.42	13.5	2.96	15.7	3.57	16.8	3.89	17.9	4.23	20.1	4.95	22.3	5.73
50	125 (14.00)	10	9.45	1.28	11.3	1.48	13.1	1.69	14.0	1.80	14.9	1.92	16.7	2.15	18.6	2.40
		12	9.45	1.29	11.3	1.50	13.1	1.72	14.0	1.83	14.9	1.95	16.7	2.19	18.6	2.44
		14	9.45	1.31	11.3	1.52	13.1	1.74	14.0	1.86	14.9	1.98	16.7	2.22	18.6	2.48
		16	9.45	1.33	11.3	1.54	13.1	1.77	14.0	1.89	14.9	2.01	16.7	2.26	18.6	2.53
		18	9.45	1.35	11.3	1.57	13.1	1.80	14.0	1.92	14.9	2.05	16.7	2.30	18.6	2.57
		20	9.45	1.37	11.3	1.59	13.1	1.83	14.0	1.95	14.9	2.08	16.7	2.35	18.6	2.62
		21	9.45	1.38	11.3	1.60	13.1	1.85	14.0	1.97	14.9	2.10	16.7	2.37	18.6	2.65
		23	9.45	1.40	11.3	1.63	13.1	1.88	14.0	2.01	14.9	2.14	16.7	2.41	18.6	2.71
		25	9.45	1.42	11.3	1.66	13.1	1.91	14.0	2.05	14.9	2.20	16.7	2.53	18.6	2.89
		27	9.45	1.44	11.3	1.72	13.1	2.02	14.0	2.18	14.9	2.34	16.7	2.70	18.6	3.08
		29	9.45	1.52	11.3	1.82	13.1	2.14	14.0	2.31	14.9	2.49	16.7	2.87	18.6	3.28
		31	9.45	1.61	11.3	1.92	13.1	2.27	14.0	2.45	14.9	2.64	16.7	3.05	18.6	3.48
		33	9.45	1.70	11.3	2.04	13.1	2.40	14.0	2.60	14.9	2.81	16.7	3.24	18.6	3.71
		35	9.45	1.79	11.3	2.15	13.1	2.55	14.0	2.76	14.9	2.97	16.7	3.44	18.6	3.94
		37	9.45	1.89	11.3	2.27	13.1	2.69	14.0	2.92	14.9	3.15	16.7	3.65	18.6	4.18
		39	9.45	1.99	11.3	2.40	13.1	2.85	14.0	3.09	14.9	3.34	16.7	3.87	18.6	4.44

4TW31482-1A

4 Capacity tables

4 - 2 Cooling capacity tables

REYQ12P9

TC: Total Capacity: kW ; PI: Power Input: kW (compressor + outdoor fan motor)

Combination (%)	Capacity index (kW)	Outdoor air temp. (°CDB)	Indoor air temperature: 14.0 °CWB 20.0 °CDB TC kW	14.0 °CWB 20.0 °CDB PI kW	16.0 °CWB 23.0 °CDB TC kW	16.0 °CWB 23.0 °CDB PI kW	18.0 °CWB 26.0 °CDB TC kW	18.0 °CWB 26.0 °CDB PI kW	19.0 °CWB 27.0 °CDB TC kW	19.0 °CWB 27.0 °CDB PI kW	20.0 °CWB 28.0 °CDB TC kW	20.0 °CWB 28.0 °CDB PI kW	22.0 °CWB 30.0 °CDB TC kW	22.0 °CWB 30.0 °CDB PI kW	24.0 °CWB 32.0 °CDB TC kW	24.0 °CWB 32.0 °CDB PI kW
130	390 (43.55)	10	29.4	4.02	35.1	4.92	40.7	5.85	42.2	5.85	42.7	5.85	43.8	5.85	44.8	5.85
		12	29.4	4.09	35.1	5.01	40.7	5.96	41.6	5.96	42.2	5.96	43.2	5.96	44.3	5.96
		14	29.4	4.17	35.1	5.10	40.6	6.03	41.1	6.03	41.6	6.03	42.7	6.03	43.8	6.03
		16	29.4	4.25	35.1	5.20	40.0	6.00	40.6	6.02	41.1	6.02	42.1	6.03	43.2	6.04
		18	29.4	4.33	35.1	5.31	39.5	6.23	40.0	6.26	40.5	6.29	41.6	6.35	42.7	6.42
		20	29.4	4.42	35.1	5.65	38.9	6.54	39.5	6.57	40.0	6.60	41.1	6.67	42.1	6.73
		21	29.4	4.54	35.1	5.86	38.7	6.69	39.2	6.72	39.7	6.76	40.8	6.82	41.8	6.89
		23	29.4	4.86	35.1	6.28	38.1	6.99	38.7	7.03	39.2	7.06	40.2	7.14	41.3	7.21
		25	29.4	5.20	35.1	6.72	37.6	7.30	38.1	7.34	38.6	7.37	39.7	7.45	40.8	7.53
		27	29.4	5.55	35.1	7.19	37.0	7.61	37.6	7.65	38.1	7.69	39.2	7.77	40.2	7.85
		29	29.4	5.93	35.1	7.68	36.5	7.91	37.0	7.96	37.5	8.00	38.6	8.08	39.7	8.17
		31	29.4	6.32	34.9	8.13	35.9	8.22	36.5	8.27	37.0	8.31	38.1	8.40	39.1	8.49
		33	29.4	6.74	34.3	8.44	35.4	8.54	35.9	8.58	36.5	8.63	37.5	8.73	38.6	8.82
		35	29.4	7.18	33.8	8.75	34.9	8.85	35.4	8.90	35.9	8.95	37.0	9.05	38.0	9.15
		37	29.4	7.64	33.2	9.06	34.3	9.16	34.8	9.21	35.4	9.27	36.4	9.37	37.5	9.48
		39	29.4	8.14	32.7	9.37	33.8	9.48	34.3	9.53	34.8	9.59	35.9	9.70	36.9	9.81
120	360 (40.20)	10	27.1	3.67	32.4	4.48	37.6	5.33	40.2	5.76	42.1	5.76	43.0	5.76	44.0	5.76
		12	27.1	3.74	32.4	4.57	37.6	5.43	40.2	5.87	41.5	5.87	42.5	5.87	43.5	5.87
		14	27.1	3.81	32.4	4.65	37.6	5.53	40.2	5.98	41.0	5.98	41.9	5.98	42.9	5.98
		16	27.1	3.88	32.4	4.74	37.6	5.64	39.9	6.02	40.4	6.02	41.4	6.03	42.4	6.04
		18	27.1	3.95	32.4	4.84	37.6	5.83	39.4	6.23	39.9	6.26	40.9	6.31	41.8	6.37
		20	27.1	4.03	32.4	5.03	37.6	6.27	38.8	6.53	39.3	6.56	40.3	6.62	41.3	6.68
		21	27.1	4.07	32.4	5.21	37.6	6.50	38.6	6.68	39.1	6.71	40.0	6.77	41.0	6.84
		23	27.1	4.35	32.4	5.58	37.5	6.95	38.0	6.99	38.5	7.02	39.5	7.09	40.5	7.15
		25	27.1	4.65	32.4	5.97	37.0	7.26	37.5	7.29	38.0	7.33	38.9	7.40	39.9	7.47
		27	27.1	4.96	32.4	6.38	36.4	7.56	36.9	7.60	37.4	7.64	38.4	7.71	39.4	7.78
		29	27.1	5.29	32.4	6.82	35.9	7.87	36.4	7.91	36.9	7.95	37.9	8.02	38.8	8.10
		31	27.1	5.64	32.4	7.28	35.4	8.17	35.8	8.22	36.3	8.26	37.3	8.34	38.3	8.42
		33	27.1	6.00	32.4	7.76	34.8	8.48	35.3	8.53	35.8	8.57	36.8	8.66	37.7	8.75
		35	27.1	6.39	32.4	8.28	34.3	8.79	34.8	8.84	35.2	8.88	36.2	8.98	37.2	9.07
		37	27.1	6.80	32.4	8.82	33.7	9.10	34.2	9.15	34.7	9.20	35.7	9.30	36.7	9.40
		39	27.1	7.24	32.2	9.31	33.2	9.42	33.7	9.47	34.2	9.52	35.1	9.62	36.1	9.72
110	330 (36.85)	10	24.9	3.33	29.7	4.06	34.5	4.82	36.9	5.21	39.2	5.60	42.3	5.73	43.2	5.73
		12	24.9	3.39	29.7	4.13	34.5	4.91	36.9	5.31	39.2	5.71	41.7	5.84	42.6	5.84
		14	24.9	3.45	29.7	4.21	34.5	5.00	36.9	5.41	39.2	5.82	41.2	5.95	42.1	5.95
		16	24.9	3.52	29.7	4.29	34.5	5.10	36.9	5.51	39.2	5.93	40.6	6.03	41.5	6.04
		18	24.9	3.58	29.7	4.38	34.5	5.20	36.9	5.66	39.2	6.22	40.1	6.27	41.0	6.32
		20	24.9	3.65	29.7	4.46	34.5	5.51	36.9	6.09	38.7	6.52	39.6	6.57	40.5	6.63
		21	24.9	3.69	29.7	4.60	34.5	5.71	36.9	6.31	38.4	6.67	39.3	6.73	40.2	6.78
		23	24.9	3.86	29.7	4.92	34.5	6.12	36.9	6.77	37.8	6.97	38.7	7.03	39.6	7.10
		25	24.9	4.12	29.7	5.27	34.5	6.55	36.9	7.25	37.3	7.28	38.2	7.34	39.1	7.41
		27	24.9	4.40	29.7	5.63	34.5	7.01	36.3	7.55	36.8	7.59	37.7	7.65	38.5	7.72
		29	24.9	4.69	29.7	6.00	34.5	7.49	35.8	7.86	36.2	7.89	37.1	7.96	38.0	8.04
		31	24.9	4.99	29.7	6.40	34.5	7.99	35.2	8.16	35.7	8.20	36.6	8.28	37.5	8.35
		33	24.9	5.32	29.7	6.83	34.2	8.43	34.7	8.47	35.1	8.51	36.0	8.59	36.9	8.67
		35	24.9	5.65	29.7	7.27	33.7	8.74	34.1	8.78	34.6	8.82	35.5	8.91	36.4	8.99
		37	24.9	6.01	29.7	7.75	33.1	9.04	33.6	9.09	34.0	9.13	34.9	9.22	35.8	9.31
		39	24.9	6.39	29.7	8.25	32.6	9.35	33.0	9.40	33.5	9.45	34.4	9.54	35.3	9.64
100	300 (33.50)	10	22.6	3.00	27.0	3.64	31.3	4.32	33.5	4.66	35.7	5.02	40.0	5.73	42.4	5.73
		12	22.6	3.06	27.0	3.71	31.3	4.40	33.5	4.75	35.7	5.11	40.0	5.84	41.8	5.84
		14	22.6	3.11	27.0	3.78	31.3	4.48	33.5	4.84	35.7	5.21	40.0	5.95	41.3	5.95
		16	22.6	3.17	27.0	3.85	31.3	4.57	33.5	4.94	35.7	5.31	39.9	6.03	40.7	6.04
		18	22.6	3.23	27.0	3.93	31.3	4.66	33.5	5.03	35.7	5.42	39.4	6.23	40.2	6.27
		20	22.6	3.29	27.0	4.00	31.3	4.80	33.5	5.29	35.7	5.80	38.8	6.53	39.6	6.58
		21	22.6	3.32	27.0	4.04	31.3	4.97	33.5	5.48	35.7	6.01	38.5	6.68	39.4	6.73
		23	22.6	3.41	27.0	4.31	31.3	5.32	33.5	5.87	35.7	6.44	38.0	6.98	38.8	7.04
		25	22.6	3.64	27.0	4.61	31.3	5.69	33.5	6.28	35.7	6.90	37.4	7.29	38.3	7.35
		27	22.6	3.88	27.0	4.92	31.3	6.09	33.5	6.72	35.7	7.38	36.9	7.60	37.7	7.66
		29	22.6	4.13	27.0	5.24	31.3	6.50	33.5	7.18	35.5	7.84	36.4	7.90	37.2	7.97
		31	22.6	4.39	27.0	5.59	31.3	6.94	33.5	7.66	35.0	8.14	35.8	8.21	36.6	8.28
		33	22.6	4.67	27.0	5.95	31.3	7.40	33.5	8.18	34.5	8.45	35.3	8.52	36.1	8.60
		35	22.6	4.96	27.0	6.34	31.3	7.88	33.5	8.72	33.9	8.76	34.7	8.84	35.5	8.91
		37	22.6	5.27	27.0	6.74	31.3	8.40	33.0	9.03	33.4	9.07	34.2	9.15	35.0	9.23
		39	22.6	5.60	27.0	7.17	31.3	8.95	32.4	9.34	32.8	9.38	33.6	9.46	34.4	9.55

4TW31482-1A

NOTES - ANMERKUNGEN - Σημειώσεις - NOTAS - REMARQUES - NOTE - OPMERKINGEN - примечания - NOTLAR

1 The above table shows the average value of conditions which may occur.
Die obige Tabelle zeigt den Durchschnittswert der Bedingungen, die auftreten können.
Στον παραπάνω πίνακα αναγράφεται η μέση τιμή για συνθήκες που μπορεί να προκύψουν.
La tabla de arriba muestra el valor medio de condiciones que pueden ocurrir.
Le tableau ci-dessus donne la valeur moyenne pour des conditions qui peuvent survenir.
La tabella in alto mostra il valore delle condizioni medie che si possono riscontrare.
De tabel hierboven geeft de gemiddelde waarde aan van situaties die kunnen voorvallen.
Таблица расположенная выше показывает среднее значение условий, которые могут наступить.
Yukarıdaki tablo meydana gelebilecek koşulların ortalama değerini göstermektedir.

4 Capacity tables

4 - 2 Cooling capacity tables

REYQ12P9

TC: Total Capacity: kW ; PI: Power Input: kW (compressor + outdoor fan motor)

Combination (%)	Capacity index (kW)	Outdoor air temp. (°CDB)	Indoor air temperature: 14.0 °CWB / 20.0 °CDB		16.0 °CWB / 23.0 °CDB		18.0 °CWB / 26.0 °CDB		19.0 °CWB / 27.0 °CDB		20.0 °CWB / 28.0 °CDB		22.0 °CWB / 30.0 °CDB		24.0 °CWB / 32.0 °CDB	
			TC	PI	TC	PI	TC	PI	TC	PI	TC	PI	TC	PI	TC	PI
			kW	kW	kW	kW	kW	kW	kW	kW	kW	kW	kW	kW	kW	kW
90	270 (30.15)	10	20.3	2.69	24.3	3.24	28.2	3.83	30.2	4.13	32.1	4.44	36.0	5.07	40.0	5.72
		12	20.3	2.74	24.3	3.30	28.2	3.90	30.2	4.21	32.1	4.53	36.0	5.17	40.0	5.83
		14	20.3	2.78	24.3	3.36	28.2	3.97	30.2	4.29	32.1	4.61	36.0	5.27	40.0	5.94
		16	20.3	2.83	24.3	3.42	28.2	4.05	30.2	4.37	32.1	4.70	36.0	5.37	39.9	6.04
		18	20.3	2.88	24.3	3.49	28.2	4.13	30.2	4.46	32.1	4.79	36.0	5.48	39.3	6.22
		20	20.3	2.94	24.3	3.56	28.2	4.21	30.2	4.55	32.1	4.97	36.0	5.89	38.8	6.53
		21	20.3	2.96	24.3	3.59	28.2	4.28	30.2	4.71	32.1	5.15	36.0	6.10	38.5	6.68
		23	20.3	3.02	24.3	3.74	28.2	4.58	30.2	5.04	32.1	5.52	36.0	6.54	38.0	6.98
		25	20.3	3.18	24.3	3.99	28.2	4.90	30.2	5.39	32.1	5.90	36.0	7.00	37.4	7.29
		27	20.3	3.39	24.3	4.26	28.2	5.23	30.2	5.76	32.1	6.31	36.0	7.49	36.9	7.60
		29	20.3	3.60	24.3	4.54	28.2	5.58	30.2	6.15	32.1	6.74	35.6	7.84	36.3	7.90
		31	20.3	3.83	24.3	4.83	28.2	5.95	30.2	6.56	32.1	7.19	35.1	8.15	35.8	8.21
		33	20.3	4.07	24.3	5.14	28.2	6.34	30.2	6.99	32.1	7.67	34.5	8.46	35.3	8.52
		35	20.3	4.32	24.3	5.47	28.2	6.75	30.2	7.45	32.1	8.18	34.0	8.76	34.7	8.83
		37	20.3	4.58	24.3	5.81	28.2	7.19	30.2	7.93	32.1	8.72	33.4	9.07	34.2	9.15
		39	20.3	4.86	24.3	6.18	28.2	7.65	30.2	8.45	32.1	9.29	32.9	9.39	33.6	9.46
80	240 (26.80)	10	18.1	2.39	21.6	2.86	25.1	3.36	26.8	3.62	28.5	3.88	32.0	4.43	35.5	4.99
		12	18.1	2.43	21.6	2.91	25.1	3.42	26.8	3.68	28.5	3.96	32.0	4.51	35.5	5.08
		14	18.1	2.47	21.6	2.96	25.1	3.48	26.8	3.75	28.5	4.03	32.0	4.60	35.5	5.18
		16	18.1	2.51	21.6	3.01	25.1	3.55	26.8	3.82	28.5	4.11	32.0	4.69	35.5	5.28
		18	18.1	2.55	21.6	3.07	25.1	3.61	26.8	3.90	28.5	4.19	32.0	4.78	35.5	5.39
		20	18.1	2.60	21.6	3.13	25.1	3.68	26.8	3.97	28.5	4.27	32.0	4.95	35.5	5.76
		21	18.1	2.62	21.6	3.15	25.1	3.72	26.8	4.01	28.5	4.36	32.0	5.13	35.5	5.97
		23	18.1	2.67	21.6	3.22	25.1	3.90	26.8	4.27	28.5	4.66	32.0	5.50	35.5	6.40
		25	18.1	2.76	21.6	3.42	25.1	4.17	26.8	4.57	28.5	4.99	32.0	5.88	35.5	6.85
		27	18.1	2.93	21.6	3.65	25.1	4.45	26.8	4.88	28.5	5.33	32.0	6.29	35.5	7.33
		29	18.1	3.11	21.6	3.88	25.1	4.74	26.8	5.20	28.5	5.68	32.0	6.72	35.5	7.84
		31	18.1	3.31	21.6	4.13	25.1	5.05	26.8	5.54	28.5	6.06	32.0	7.17	35.0	8.14
		33	18.1	3.51	21.6	4.39	25.1	5.37	26.8	5.90	28.5	6.46	32.0	7.64	34.4	8.45
		35	18.1	3.72	21.6	4.66	25.1	5.71	26.8	6.28	28.5	6.88	32.0	8.15	33.9	8.76
		37	18.1	3.94	21.6	4.95	25.1	6.08	26.8	6.68	28.5	7.32	32.0	8.68	33.3	9.06
		39	18.1	4.18	21.6	5.26	25.1	6.46	26.8	7.11	28.5	7.79	32.0	9.25	32.8	9.38
70	210 (23.45)	10	15.8	2.10	18.9	2.49	21.9	2.91	23.5	3.13	25.0	3.35	28.0	3.80	31.1	4.28
		12	15.8	2.13	18.9	2.53	21.9	2.96	23.5	3.18	25.0	3.41	28.0	3.87	31.1	4.36
		14	15.8	2.16	18.9	2.57	21.9	3.01	23.5	3.24	25.0	3.47	28.0	3.95	31.1	4.44
		16	15.8	2.20	18.9	2.62	21.9	3.07	23.5	3.30	25.0	3.53	28.0	4.02	31.1	4.53
		18	15.8	2.24	18.9	2.67	21.9	3.12	23.5	3.36	25.0	3.60	28.0	4.10	31.1	4.62
		20	15.8	2.27	18.9	2.71	21.9	3.18	23.5	3.42	25.0	3.67	28.0	4.18	31.1	4.74
		21	15.8	2.29	18.9	2.74	21.9	3.21	23.5	3.46	25.0	3.71	28.0	4.25	31.1	4.91
		23	15.8	2.33	18.9	2.79	21.9	3.28	23.5	3.57	25.0	3.88	28.0	4.55	31.1	5.26
		25	15.8	2.37	18.9	2.90	21.9	3.50	23.5	3.81	25.0	4.15	28.0	4.86	31.1	5.63
		27	15.8	2.51	18.9	3.09	21.9	3.72	23.5	4.07	25.0	4.43	28.0	5.19	31.1	6.02
		29	15.8	2.66	18.9	3.28	21.9	3.96	23.5	4.33	25.0	4.72	28.0	5.54	31.1	6.42
		31	15.8	2.82	18.9	3.48	21.9	4.22	23.5	4.61	25.0	5.02	28.0	5.90	31.1	6.85
		33	15.8	2.99	18.9	3.70	21.9	4.48	23.5	4.91	25.0	5.35	28.0	6.29	31.1	7.31
		35	15.8	3.17	18.9	3.92	21.9	4.76	23.5	5.22	25.0	5.69	28.0	6.70	31.1	7.79
		37	15.8	3.36	18.9	4.16	21.9	5.06	23.5	5.54	25.0	6.05	28.0	7.13	31.1	8.30
		39	15.8	3.55	18.9	4.41	21.9	5.37	23.5	5.89	25.0	6.43	28.0	7.59	31.1	8.84
60	180 (20.10)	10	13.6	1.83	16.2	2.14	18.8	2.48	20.1	2.66	21.4	2.84	24.0	3.21	26.6	3.59
		12	13.6	1.85	16.2	2.18	18.8	2.52	20.1	2.70	21.4	2.88	24.0	3.26	26.6	3.66
		14	13.6	1.88	16.2	2.21	18.8	2.56	20.1	2.75	21.4	2.94	24.0	3.32	26.6	3.73
		16	13.6	1.91	16.2	2.25	18.8	2.61	20.1	2.80	21.4	2.99	24.0	3.39	26.6	3.80
		18	13.6	1.94	16.2	2.28	18.8	2.65	20.1	2.85	21.4	3.04	24.0	3.45	26.6	3.87
		20	13.6	1.97	16.2	2.32	18.8	2.70	20.1	2.90	21.4	3.10	24.0	3.52	26.6	3.95
		21	13.6	1.98	16.2	2.34	18.8	2.73	20.1	2.92	21.4	3.13	24.0	3.55	26.6	3.99
		23	13.6	2.01	16.2	2.38	18.8	2.78	20.1	2.98	21.4	3.19	24.0	3.69	26.6	4.24
		25	13.6	2.05	16.2	2.43	18.8	2.88	20.1	3.13	21.4	3.39	24.0	3.94	26.6	4.53
		27	13.6	2.12	16.2	2.57	18.8	3.07	20.1	3.33	21.4	3.61	24.0	4.20	26.6	4.83
		29	13.6	2.25	16.2	2.73	18.8	3.26	20.1	3.55	21.4	3.84	24.0	4.47	26.6	5.15
		31	13.6	2.38	16.2	2.90	18.8	3.47	20.1	3.77	21.4	4.09	24.0	4.76	26.6	5.49
		33	13.6	2.52	16.2	3.07	18.8	3.68	20.1	4.00	21.4	4.34	24.0	5.07	26.6	5.85
		35	13.6	2.66	16.2	3.25	18.8	3.90	20.1	4.25	21.4	4.62	24.0	5.39	26.6	6.23
		37	13.6	2.82	16.2	3.44	18.8	4.14	20.1	4.51	21.4	4.90	24.0	5.73	26.6	6.62
		39	13.6	2.97	16.2	3.65	18.8	4.39	20.1	4.79	21.4	5.20	24.0	6.09	26.6	7.05
50	150 (16.75)	10	11.3	1.57	13.5	1.82	15.7	2.08	16.8	2.22	17.8	2.36	20.0	2.64	22.2	2.95
		12	11.3	1.59	13.5	1.84	15.7	2.11	16.8	2.25	17.8	2.39	20.0	2.69	22.2	3.00
		14	11.3	1.61	13.5	1.87	15.7	2.14	16.8	2.29	17.8	2.43	20.0	2.74	22.2	3.05
		16	11.3	1.63	13.5	1.90	15.7	2.18	16.8	2.32	17.8	2.47	20.0	2.78	22.2	3.11
		18	11.3	1.66	13.5	1.93	15.7	2.21	16.8	2.36	17.8	2.52	20.0	2.83	22.2	3.16
		20	11.3	1.68	13.5	1.96	15.7	2.25	16.8	2.40	17.8	2.56	20.0	2.89	22.2	3.22
		21	11.3	1.69	13.5	1.97	15.7	2.27	16.8	2.42	17.8	2.58	20.0	2.91	22.2	3.25
		23	11.3	1.72	13.5	2.00	15.7	2.31	16.8	2.47	17.8	2.63	20.0	2.97	22.2	3.33
		25	11.3	1.74	13.5	2.04	15.7	2.35	16.8	2.52	17.8	2.71	20.0	3.12	22.2	3.55
		27	11.3	1.77	13.5	2.11	15.7	2.48	16.8	2.68	17.8	2.88	20.0	3.32	22.2	3.78
		29	11.3	1.87	13.5	2.24	15.7	2.63	16.8	2.84	17.8	3.06	20.0	3.53	22.2	4.03
		31	11.3	1.98	13.5	2.37	15.7	2.79	16.8	3.02	17.8	3.25	20.0	3.75	22.2	4.29
		33	11.3	2.09	13.5	2.50	15.7	2.96	16.8	3.20	17.8	3.45	20.0	3.98	22.2	4.56
		35	11.3	2.21	13.5	2.65	15.7	3.13	16.8	3.39	17.8	3.66	20.0	4.23	22.2	4.84
		37	11.3	2.33	13.5	2.80	15.7	3.31	16.8	3.59	17.8	3.88	20.0	4.49	22.2	5.14
		39	11.3	2.45	13.5	2.95	15.7	3.51	16.8	3.80	17.8	4.11	20.0	4.76	22.2	5.46

4TW31482-1A

4 Capacity tables

4 - 2 Cooling capacity tables

REYQ14P8

TC: Total Capacity: kW ; PI: Power Input: kW (compressor + outdoor fan motor)

Combination (%)	Capacity index (kW)	Outdoor air temp. (°CDB)	Indoor air temperature: 14.0 °CWB 20.0 °CDB TC kW	14.0 °CWB 20.0 °CDB PI kW	16.0 °CWB 23.0 °CDB TC kW	16.0 °CWB 23.0 °CDB PI kW	18.0 °CWB 26.0 °CDB TC kW	18.0 °CWB 26.0 °CDB PI kW	19.0 °CWB 27.0 °CDB TC kW	19.0 °CWB 27.0 °CDB PI kW	20.0 °CWB 28.0 °CDB TC kW	20.0 °CWB 28.0 °CDB PI kW	22.0 °CWB 30.0 °CDB TC kW	22.0 °CWB 30.0 °CDB PI kW	24.0 °CWB 32.0 °CDB TC kW	24.0 °CWB 32.0 °CDB PI kW
130	455 (52.00)	10	35.1	5.25	41.9	6.43	48.6	7.64	52.0	7.64	53.0	7.64	54.3	7.64	55.6	7.64
		12	35.1	5.35	41.9	6.55	48.6	7.79	51.7	7.79	52.4	7.79	53.6	7.79	54.9	7.79
		14	35.1	5.45	41.9	6.67	48.6	7.94	51.0	7.94	51.7	7.94	52.9	7.94	54.2	7.94
		16	35.1	5.55	41.9	6.80	48.6	8.09	50.4	7.97	51.0	7.97	52.3	7.93	53.5	7.91
		18	35.1	5.66	41.9	6.94	48.6	8.61	49.7	8.79	50.3	8.83	51.6	8.91	52.8	8.99
		20	35.1	5.77	41.9	7.39	48.4	9.17	49.0	9.22	49.6	9.26	50.9	9.34	52.2	9.43
		21	35.1	5.94	41.9	7.65	48.0	9.39	48.7	9.43	49.3	9.47	50.6	9.56	51.8	9.65
		23	35.1	6.35	41.9	8.21	47.3	9.81	48.0	9.86	48.6	9.91	49.9	10.00	51.1	10.1
		25	35.1	6.80	41.9	8.79	46.7	10.2	47.3	10.3	47.9	10.3	49.2	10.4	50.5	10.5
		27	35.1	7.26	41.9	9.40	46.0	10.7	46.6	10.7	47.2	10.8	48.5	10.9	49.8	11.0
		29	35.1	7.75	41.9	10.0	45.3	11.1	45.9	11.2	46.6	11.2	47.8	11.3	49.1	11.4
		31	35.1	8.26	41.9	10.7	44.6	11.5	45.2	11.6	45.9	11.7	47.1	11.8	48.4	11.9
		33	35.1	8.81	41.9	11.5	43.9	12.0	44.6	12.0	45.2	12.1	46.5	12.2	47.7	12.3
		35	35.1	9.38	41.9	12.2	43.2	12.4	43.9	12.5	44.5	12.5	45.8	12.7	47.0	12.8
		37	35.1	9.99	41.3	12.7	42.6	12.8	43.2	12.9	43.8	13.0	45.1	13.1	46.4	13.3
		39	35.1	10.6	40.6	13.1	41.9	13.3	42.5	13.4	43.1	13.4	44.4	13.6	45.7	13.7
120	420 (48.00)	10	32.4	4.80	38.6	5.86	44.9	6.97	48.0	7.53	51.1	7.53	53.4	7.53	54.6	7.53
		12	32.4	4.88	38.6	5.97	44.9	7.10	48.0	7.67	51.1	7.67	52.7	7.67	53.9	7.67
		14	32.4	4.97	38.6	6.08	44.9	7.23	48.0	7.82	50.9	7.82	52.0	7.82	53.2	7.82
		16	32.4	5.07	38.6	6.20	44.9	7.38	48.0	7.97	50.2	7.97	51.4	7.93	52.5	7.91
		18	32.4	5.17	38.6	6.32	44.9	7.63	48.0	8.44	49.5	8.78	50.7	8.85	51.9	8.92
		20	32.4	5.27	38.6	6.57	44.9	8.20	48.0	9.08	48.8	9.20	50.0	9.28	51.2	9.36
		21	32.4	5.32	38.6	6.81	44.9	8.50	47.9	9.38	48.5	9.42	49.7	9.50	50.8	9.58
		23	32.4	5.68	38.6	7.29	44.9	9.11	47.2	9.80	47.8	9.85	49.0	9.93	50.1	10.0
		25	32.4	6.07	38.6	7.81	44.9	9.76	46.5	10.2	47.1	10.3	48.3	10.4	49.5	10.5
		27	32.4	6.48	38.6	8.35	44.9	10.4	45.9	10.7	46.4	10.7	47.6	10.8	48.8	10.9
		29	32.4	6.91	38.6	8.91	44.6	11.0	45.2	11.1	45.8	11.1	46.9	11.2	48.1	11.4
		31	32.4	7.37	38.6	9.51	43.9	11.5	44.5	11.5	45.1	11.6	46.2	11.7	47.4	11.8
		33	32.4	7.85	38.6	10.1	43.2	11.9	43.8	12.0	44.4	12.0	45.6	12.1	46.7	12.2
		35	32.4	8.36	38.6	10.8	42.5	12.3	43.1	12.4	43.7	12.5	44.9	12.6	46.0	12.7
		37	32.4	8.89	38.6	11.5	41.9	12.8	42.4	12.8	43.0	12.9	44.2	13.0	45.4	13.2
		39	32.4	9.46	38.6	12.3	41.2	13.2	41.8	13.3	42.3	13.3	43.5	13.5	44.7	13.6
110	385 (44.00)	10	29.7	4.36	35.4	5.30	41.1	6.30	44.0	6.81	46.9	7.32	52.5	7.49	53.6	7.49
		12	29.7	4.43	35.4	5.40	41.1	6.42	44.0	6.94	46.9	7.46	51.8	7.64	52.9	7.64
		14	29.7	4.51	35.4	5.50	41.1	6.54	44.0	7.07	46.9	7.61	51.2	7.78	52.2	7.78
		16	29.7	4.60	35.4	5.61	41.1	6.67	44.0	7.21	46.9	7.75	50.5	7.93	51.5	7.91
		18	29.7	4.69	35.4	5.72	41.1	6.80	44.0	7.41	46.9	8.14	49.8	8.79	50.9	8.86
		20	29.7	4.78	35.4	5.83	41.1	7.20	44.0	7.96	46.9	8.75	49.1	9.22	50.2	9.29
		21	29.7	4.82	35.4	6.01	41.1	7.46	44.0	8.25	46.9	9.07	48.8	9.44	49.8	9.51
		23	29.7	5.05	35.4	6.44	41.1	8.00	44.0	8.84	46.9	9.73	48.1	9.87	49.2	9.95
		25	29.7	5.39	35.4	6.88	41.1	8.56	44.0	9.47	46.3	10.2	47.4	10.3	48.5	10.4
		27	29.7	5.75	35.4	7.35	41.1	9.16	44.0	10.1	45.6	10.6	46.7	10.7	47.8	10.8
		29	29.7	6.13	35.4	7.85	41.1	9.79	44.0	10.8	45.0	11.1	46.0	11.2	47.1	11.3
		31	29.7	6.53	35.4	8.37	41.1	10.5	43.7	11.5	44.3	11.5	45.3	11.6	46.4	11.7
		33	29.7	6.95	35.4	8.92	41.1	11.2	43.1	11.9	43.6	11.9	44.7	12.0	45.7	12.2
		35	29.7	7.39	35.4	9.51	41.1	11.9	42.4	12.3	42.9	12.4	44.0	12.5	45.1	12.6
		37	29.7	7.86	35.4	10.1	41.1	12.7	41.7	12.8	42.2	12.8	43.3	12.9	44.4	13.0
		39	29.7	8.36	35.4	10.8	40.5	13.1	41.0	13.2	41.5	13.3	42.6	13.4	43.7	13.5
100	350 (40.00)	10	27.0	3.93	32.2	4.76	37.4	5.64	40.0	6.10	42.6	6.56	47.8	7.49	52.6	7.49
		12	27.0	4.00	32.2	4.85	37.4	5.75	40.0	6.21	42.6	6.68	47.8	7.64	51.9	7.64
		14	27.0	4.07	32.2	4.94	37.4	5.86	40.0	6.33	42.6	6.81	47.8	7.78	51.2	7.78
		16	27.0	4.14	32.2	5.03	37.4	5.97	40.0	6.45	42.6	6.94	47.8	7.93	50.6	7.91
		18	27.0	4.22	32.2	5.13	37.4	6.09	40.0	6.58	42.6	7.08	47.8	8.39	49.9	8.80
		20	27.0	4.30	32.2	5.23	37.4	6.27	40.0	6.91	42.6	7.59	47.8	9.02	49.2	9.23
		21	27.0	4.34	32.2	5.28	37.4	6.50	40.0	7.16	42.6	7.86	47.8	9.35	48.8	9.44
		23	27.0	4.46	32.2	5.64	37.4	6.96	40.0	7.67	42.6	8.43	47.2	9.80	48.2	9.87
		25	27.0	4.75	32.2	6.02	37.4	7.44	40.0	8.21	42.6	9.02	46.5	10.2	47.5	10.3
		27	27.0	5.07	32.2	6.43	37.4	7.96	40.0	8.78	42.6	9.65	45.8	10.7	46.8	10.7
		29	27.0	5.40	32.2	6.86	37.4	8.50	40.0	9.38	42.6	10.3	45.1	11.1	46.1	11.2
		31	27.0	5.74	32.2	7.31	37.4	9.07	40.0	10.0	42.6	11.0	44.5	11.5	45.4	11.6
		33	27.0	6.11	32.2	7.78	37.4	9.67	40.0	10.7	42.6	11.8	43.8	12.0	44.7	12.1
		35	27.0	6.49	32.2	8.28	37.4	10.3	40.0	11.4	42.1	12.3	43.1	12.4	44.1	12.5
		37	27.0	6.89	32.2	8.82	37.4	11.0	40.0	12.2	41.4	12.7	42.4	12.8	43.4	12.9
		39	27.0	7.32	32.2	9.38	37.4	11.7	40.0	13.0	40.7	13.2	41.7	13.3	42.7	13.4

4TW31482-1A

NOTES - ANMERKUNGEN - Σημειώσεις - NOTAS - REMARQUES - NOTE - OPMERKINGEN - примечания - NOTLAR

1 The above table shows the average value of conditions which may occur.
Die obige Tabelle zeigt den Durchschnittswert der Bedingungen, die auftreten können.
Στον παραπάνω πίνακα αναγράφεται η μέση τιμή για συνθήκες που μπορεί να προκύψουν.
La tabla de arriba muestra el valor medio de condiciones que pueden ocurrir.
Le tableau ci-dessus donne la valeur moyenne pour des conditions qui peuvent survenir.
La tabella in alto mostra il valore delle condizioni medie che si possono riscontrare.
De tabel hierboven geeft de gemiddelde waarde aan van situaties die kunnen voorvallen.
Таблица расположенная выше показывает среднее значение условий, которые могут наступить.
Yukarıdaki tablo meydana gelebilecek koşulların ortalama değerini göstermektedir.

4 Capacity tables

4 - 2 Cooling capacity tables

REYQ14P8

TC: Total Capacity: kW ; PI: Power Input: kW (compressor + outdoor fan motor)

Combination (%)	Capacity index (kW)	Outdoor air temp. (°CDB)	Indoor air temperature: 14.0 °CWB / 20.0 °CDB		16.0 °CWB / 23.0 °CDB		18.0 °CWB / 26.0 °CDB		19.0 °CWB / 27.0 °CDB		20.0 °CWB / 28.0 °CDB		22.0 °CWB / 30.0 °CDB		24.0 °CWB / 32.0 °CDB	
			TC	PI	TC	PI	TC	PI	TC	PI	TC	PI	TC	PI	TC	PI
			kW	kW	kW	kW	kW	kW	kW	kW	kW	kW	kW	kW	kW	kW
90	315 (36.00)	10	24.3	3.52	29.0	4.24	33.7	5.01	36.0	5.40	38.3	5.81	43.0	6.63	47.7	7.48
		12	24.3	3.58	29.0	4.32	33.7	5.10	36.0	5.50	38.3	5.92	43.0	6.76	47.7	7.62
		14	24.3	3.64	29.0	4.39	33.7	5.19	36.0	5.61	38.3	6.03	43.0	6.89	47.7	7.76
		16	24.3	3.70	29.0	4.48	33.7	5.29	36.0	5.72	38.3	6.15	43.0	7.02	47.7	7.91
		18	24.3	3.77	29.0	4.56	33.7	5.40	36.0	5.83	38.3	6.27	43.0	7.16	47.7	8.37
		20	24.3	3.84	29.0	4.65	33.7	5.50	36.0	5.95	38.3	6.50	43.0	7.70	47.7	9.00
		21	24.3	3.87	29.0	4.69	33.7	5.60	36.0	6.15	38.3	6.73	43.0	7.97	47.7	9.32
		23	24.3	3.95	29.0	4.89	33.7	5.99	36.0	6.59	38.3	7.21	43.0	8.55	47.2	9.80
		25	24.3	4.16	29.0	5.22	33.7	6.41	36.0	7.05	38.3	7.72	43.0	9.16	46.5	10.2
		27	24.3	4.43	29.0	5.57	33.7	6.84	36.0	7.53	38.3	8.25	43.0	9.80	45.8	10.7
		29	24.3	4.71	29.0	5.93	33.7	7.30	36.0	8.04	38.3	8.81	43.0	10.5	45.1	11.1
		31	24.3	5.01	29.0	6.31	33.7	7.78	36.0	8.57	38.3	9.41	43.0	11.2	44.4	11.5
		33	24.3	5.32	29.0	6.72	33.7	8.29	36.0	9.14	38.3	10.0	42.9	11.9	43.8	12.0
		35	24.3	5.65	29.0	7.15	33.7	8.83	36.0	9.74	38.3	10.7	42.2	12.3	43.1	12.4
		37	24.3	5.99	29.0	7.60	33.7	9.40	36.0	10.4	38.3	11.4	41.5	12.7	42.4	12.8
		39	24.3	6.36	29.0	8.07	33.7	10.0	36.0	11.0	38.3	12.1	40.8	13.2	41.7	13.3
80	280 (32.00)	10	21.6	3.12	25.8	3.74	29.9	4.39	32.0	4.73	34.1	5.08	38.2	5.79	42.4	6.52
		12	21.6	3.17	25.8	3.80	29.9	4.47	32.0	4.82	34.1	5.17	38.2	5.90	42.4	6.65
		14	21.6	3.22	25.8	3.87	29.9	4.55	32.0	4.91	34.1	5.27	38.2	6.01	42.4	6.77
		16	21.6	3.28	25.8	3.94	29.9	4.64	32.0	5.00	34.1	5.37	38.2	6.13	42.4	6.91
		18	21.6	3.34	25.8	4.01	29.9	4.73	32.0	5.10	34.1	5.47	38.2	6.25	42.4	7.04
		20	21.6	3.39	25.8	4.09	29.9	4.82	32.0	5.20	34.1	5.58	38.2	6.48	42.4	7.53
		21	21.6	3.43	25.8	4.12	29.9	4.86	32.0	5.25	34.1	5.70	38.2	6.71	42.4	7.80
		23	21.6	3.49	25.8	4.20	29.9	5.10	32.0	5.59	34.1	6.10	38.2	7.19	42.4	8.37
		25	21.6	3.60	25.8	4.48	29.9	5.45	32.0	5.97	34.1	6.52	38.2	7.69	42.4	8.96
		27	21.6	3.83	25.8	4.77	29.9	5.81	32.0	6.37	34.1	6.96	38.2	8.22	42.4	9.59
		29	21.6	4.07	25.8	5.08	29.9	6.19	32.0	6.80	34.1	7.43	38.2	8.78	42.4	10.2
		31	21.6	4.32	25.8	5.40	29.9	6.60	32.0	7.24	34.1	7.92	38.2	9.37	42.4	10.9
		33	21.6	4.59	25.8	5.74	29.9	7.02	32.0	7.71	34.1	8.44	38.2	9.99	42.4	11.7
		35	21.6	4.86	25.8	6.10	29.9	7.47	32.0	8.21	34.1	8.99	38.2	10.7	42.1	12.3
		37	21.6	5.16	25.8	6.47	29.9	7.94	32.0	8.74	34.1	9.57	38.2	11.4	41.4	12.7
		39	21.6	5.46	25.8	6.87	29.9	8.45	32.0	9.29	34.1	10.2	38.2	12.1	40.7	13.2
70	245 (28.00)	10	18.9	2.74	22.5	3.26	26.2	3.80	28.0	4.09	29.8	4.38	33.5	4.97	37.1	5.59
		12	18.9	2.79	22.5	3.31	26.2	3.87	28.0	4.16	29.8	4.45	33.5	5.07	37.1	5.70
		14	18.9	2.83	22.5	3.37	26.2	3.94	28.0	4.23	29.8	4.54	33.5	5.16	37.1	5.81
		16	18.9	2.88	22.5	3.42	26.2	4.01	28.0	4.31	29.8	4.62	33.5	5.26	37.1	5.92
		18	18.9	2.92	22.5	3.48	26.2	4.08	28.0	4.39	29.8	4.71	33.5	5.36	37.1	6.03
		20	18.9	2.97	22.5	3.55	26.2	4.16	28.0	4.48	29.8	4.80	33.5	5.47	37.1	6.20
		21	18.9	3.00	22.5	3.58	26.2	4.20	28.0	4.52	29.8	4.85	33.5	5.55	37.1	6.42
		23	18.9	3.05	22.5	3.65	26.2	4.28	28.0	4.67	29.8	5.08	33.5	5.94	37.1	6.88
		25	18.9	3.10	22.5	3.79	26.2	4.57	28.0	4.99	29.8	5.42	33.5	6.35	37.1	7.36
		27	18.9	3.28	22.5	4.03	26.2	4.87	28.0	5.32	29.8	5.79	33.5	6.78	37.1	7.87
		29	18.9	3.48	22.5	4.29	26.2	5.18	28.0	5.66	29.8	6.17	33.5	7.24	37.1	8.40
		31	18.9	3.69	22.5	4.56	26.2	5.51	28.0	6.03	29.8	6.57	33.5	7.72	37.1	8.96
		33	18.9	3.91	22.5	4.84	26.2	5.86	28.0	6.41	29.8	6.99	33.5	8.22	37.1	9.56
		35	18.9	4.14	22.5	5.13	26.2	6.23	28.0	6.82	29.8	7.44	33.5	8.75	37.1	10.2
		37	18.9	4.39	22.5	5.44	26.2	6.61	28.0	7.25	29.8	7.91	33.5	9.32	37.1	10.9
		39	18.9	4.64	22.5	5.77	26.2	7.02	28.0	7.70	29.8	8.41	33.5	9.92	37.1	11.6
60	210 (24.00)	10	16.2	2.39	19.3	2.80	22.4	3.24	24.0	3.47	25.6	3.71	28.7	4.19	31.8	4.70
		12	16.2	2.42	19.3	2.85	22.4	3.30	24.0	3.53	25.6	3.77	28.7	4.27	31.8	4.78
		14	16.2	2.46	19.3	2.89	22.4	3.35	24.0	3.59	25.6	3.84	28.7	4.35	31.8	4.87
		16	16.2	2.49	19.3	2.94	22.4	3.41	24.0	3.65	25.6	3.91	28.7	4.43	31.8	4.96
		18	16.2	2.53	19.3	2.99	22.4	3.47	24.0	3.72	25.6	3.98	28.7	4.51	31.8	5.06
		20	16.2	2.57	19.3	3.04	22.4	3.53	24.0	3.79	25.6	4.05	28.7	4.60	31.8	5.16
		21	16.2	2.59	19.3	3.06	22.4	3.56	24.0	3.82	25.6	4.09	28.7	4.64	31.8	5.21
		23	16.2	2.63	19.3	3.12	22.4	3.63	24.0	3.90	25.6	4.17	28.7	4.82	31.8	5.54
		25	16.2	2.68	19.3	3.17	22.4	3.77	24.0	4.09	25.6	4.43	28.7	5.15	31.8	5.92
		27	16.2	2.78	19.3	3.36	22.4	4.01	24.0	4.36	25.6	4.72	28.7	5.49	31.8	6.32
		29	16.2	2.94	19.3	3.57	22.4	4.27	24.0	4.64	25.6	5.02	28.7	5.85	31.8	6.74
		31	16.2	3.11	19.3	3.79	22.4	4.53	24.0	4.93	25.6	5.34	28.7	6.23	31.8	7.18
		33	16.2	3.29	19.3	4.01	22.4	4.81	24.0	5.24	25.6	5.68	28.7	6.63	31.8	7.65
		35	16.2	3.48	19.3	4.25	22.4	5.10	24.0	5.56	25.6	6.03	28.7	7.05	31.8	8.14
		37	16.2	3.68	19.3	4.50	22.4	5.41	24.0	5.90	25.6	6.41	28.7	7.49	31.8	8.66
		39	16.2	3.89	19.3	4.77	22.4	5.74	24.0	6.26	25.6	6.80	28.7	7.96	31.8	9.21
50	175 (20.00)	10	13.5	2.05	16.1	2.37	18.7	2.72	20.0	2.90	21.3	3.08	23.9	3.46	26.5	3.85
		12	13.5	2.08	16.1	2.41	18.7	2.76	20.0	2.94	21.3	3.13	23.9	3.52	26.5	3.92
		14	13.5	2.11	16.1	2.44	18.7	2.80	20.0	2.99	21.3	3.18	23.9	3.58	26.5	3.99
		16	13.5	2.13	16.1	2.48	18.7	2.85	20.0	3.04	21.3	3.23	23.9	3.64	26.5	4.06
		18	13.5	2.16	16.1	2.52	18.7	2.89	20.0	3.09	21.3	3.29	23.9	3.70	26.5	4.14
		20	13.5	2.20	16.1	2.56	18.7	2.94	20.0	3.14	21.3	3.35	23.9	3.77	26.5	4.21
		21	13.5	2.21	16.1	2.58	18.7	2.97	20.0	3.17	21.3	3.38	23.9	3.81	26.5	4.25
		23	13.5	2.24	16.1	2.62	18.7	3.02	20.0	3.23	21.3	3.44	23.9	3.88	26.5	4.35
		25	13.5	2.28	16.1	2.66	18.7	3.07	20.0	3.29	21.3	3.54	23.9	4.07	26.5	4.64
		27	13.5	2.32	16.1	2.76	18.7	3.24	20.0	3.50	21.3	3.77	23.9	4.34	26.5	4.95
		29	13.5	2.45	16.1	2.92	18.7	3.44	20.0	3.72	21.3	4.00	23.9	4.61	26.5	5.27
		31	13.5	2.59	16.1	3.09	18.7	3.65	20.0	3.94	21.3	4.25	23.9	4.90	26.5	5.60
		33	13.5	2.73	16.1	3.27	18.7	3.87	20.0	4.18	21.3	4.51	23.9	5.21	26.5	5.96
		35	13.5	2.88	16.1	3.46	18.7	4.09	20.0	4.43	21.3	4.78	23.9	5.53	26.5	6.33
		37	13.5	3.04	16.1	3.66	18.7	4.33	20.0	4.69	21.3	5.07	23.9	5.87	26.5	6.72
		39	13.5	3.21	16.1	3.86	18.7	4.58	20.0	4.97	21.3	5.37	23.9	6.22	26.5	7.14

4TW31482-1A

4 Capacity tables

4 - 2 Cooling capacity tables

REYQ16P8

TC: Total Capacity: kW ; PI: Power Input: kW (compressor + outdoor fan motor)

Combination (%)	Capacity index (kW)	Outdoor air temp. (°CDB)	Indoor air temperature: 14.0 °CWB 20.0 °CDB TC kW	14.0 °CWB 20.0 °CDB PI kW	16.0 °CWB 23.0 °CDB TC kW	16.0 °CWB 23.0 °CDB PI kW	18.0 °CWB 26.0 °CDB TC kW	18.0 °CWB 26.0 °CDB PI kW	19.0 °CWB 27.0 °CDB TC kW	19.0 °CWB 27.0 °CDB PI kW	20.0 °CWB 28.0 °CDB TC kW	20.0 °CWB 28.0 °CDB PI kW	22.0 °CWB 30.0 °CDB TC kW	22.0 °CWB 30.0 °CDB PI kW	24.0 °CWB 32.0 °CDB TC kW	24.0 °CWB 32.0 °CDB PI kW
130	520 (58.50)	10	39.5	6.49	47.1	7.95	54.7	9.45	58.5	9.45	59.7	9.45	61.1	9.45	62.6	9.45
		12	39.5	6.61	47.1	8.10	54.7	9.63	58.2	9.63	59.0	9.63	60.4	9.63	61.8	9.63
		14	39.5	6.74	47.1	8.25	54.7	9.82	57.5	9.82	58.2	9.82	59.6	9.82	61.0	9.82
		16	39.5	6.87	47.1	8.41	54.7	10.0	56.7	9.86	57.4	9.86	58.8	9.81	60.3	9.79
		18	39.5	7.00	47.1	8.58	54.7	10.7	55.9	10.9	56.6	10.9	58.1	11.0	59.5	11.1
		20	39.5	7.14	47.1	9.14	54.5	11.4	55.2	11.4	55.9	11.5	57.3	11.6	58.7	11.7
		21	39.5	7.34	47.1	9.47	54.1	11.6	54.8	11.7	55.5	11.7	56.9	11.8	58.3	12.0
		23	39.5	7.86	47.1	10.2	53.3	12.2	54.0	12.2	54.7	12.3	56.1	12.4	57.6	12.5
		25	39.5	8.40	47.1	10.9	52.5	12.7	53.2	12.7	54.0	12.8	55.4	12.9	56.8	13.1
		27	39.5	8.98	47.1	11.6	51.8	13.2	52.5	13.3	53.2	13.4	54.6	13.5	56.0	13.6
		29	39.5	9.58	47.1	12.4	51.0	13.8	51.7	13.8	52.4	13.9	53.8	14.0	55.3	14.2
		31	39.5	10.2	47.1	13.3	50.2	14.3	50.9	14.4	51.6	14.4	53.1	14.6	54.5	14.7
		33	39.5	10.9	47.1	14.2	49.5	14.8	50.2	14.9	50.9	15.0	52.3	15.1	53.7	15.3
		35	39.5	11.6	47.1	15.1	48.7	15.4	49.4	15.5	50.1	15.5	51.5	15.7	53.0	15.9
		37	39.5	12.4	46.5	15.7	47.9	15.9	48.6	16.0	49.3	16.1	50.8	16.3	52.2	16.4
		39	39.5	13.2	45.7	16.3	47.1	16.5	47.9	16.6	48.6	16.6	50.0	16.8	51.4	17.0
120	480 (54.00)	10	36.4	5.93	43.5	7.25	50.5	8.62	54.0	9.31	57.5	9.31	60.1	9.31	61.5	9.31
		12	36.4	6.04	43.5	7.38	50.5	8.78	54.0	9.49	57.5	9.49	59.4	9.49	60.7	9.49
		14	36.4	6.15	43.5	7.52	50.5	8.95	54.0	9.67	57.3	9.67	58.6	9.67	59.9	9.67
		16	36.4	6.27	43.5	7.67	50.5	9.12	54.0	9.86	56.5	9.86	57.8	9.81	59.1	9.79
		18	36.4	6.39	43.5	7.82	50.5	9.43	54.0	10.4	55.8	10.9	57.1	11.0	58.4	11.1
		20	36.4	6.52	43.5	8.13	50.5	10.1	54.0	11.2	55.0	11.4	56.3	11.5	57.6	11.6
		21	36.4	6.58	43.5	8.42	50.5	10.5	53.9	11.6	54.6	11.7	55.9	11.8	57.2	11.9
		23	36.4	7.03	43.5	9.02	50.5	11.3	53.2	12.1	53.8	12.2	55.1	12.3	56.5	12.4
		25	36.4	7.51	43.5	9.66	50.5	12.1	52.4	12.7	53.1	12.7	54.4	12.8	55.7	13.0
		27	36.4	8.02	43.5	10.3	50.5	12.9	51.6	13.2	52.3	13.3	53.6	13.4	54.9	13.5
		29	36.4	8.55	43.5	11.0	50.2	13.7	50.9	13.7	51.5	13.8	52.8	13.9	54.1	14.1
		31	36.4	9.12	43.5	11.8	49.4	14.2	50.1	14.3	50.8	14.3	52.1	14.5	53.4	14.6
		33	36.4	9.71	43.5	12.6	48.7	14.7	49.3	14.8	50.0	14.9	51.3	15.0	52.6	15.2
		35	36.4	10.3	43.5	13.4	47.9	15.3	48.6	15.4	49.2	15.4	50.5	15.6	51.8	15.7
		37	36.4	11.0	43.5	14.3	47.1	15.8	47.8	15.9	48.4	16.0	49.8	16.1	51.1	16.3
		39	36.4	11.7	43.5	15.2	46.4	16.4	47.0	16.4	47.7	16.5	49.0	16.7	50.3	16.9
110	440 (49.50)	10	33.4	5.39	39.8	6.56	46.3	7.79	49.5	8.42	52.7	9.06	59.1	9.27	60.3	9.27
		12	33.4	5.48	39.8	6.68	46.3	7.94	49.5	8.58	52.7	9.23	58.4	9.44	59.6	9.44
		14	33.4	5.58	39.8	6.81	46.3	8.09	49.5	8.74	52.7	9.41	57.6	9.63	58.8	9.63
		16	33.4	5.69	39.8	6.94	46.3	8.25	49.5	8.92	52.7	9.59	56.8	9.81	58.0	9.79
		18	33.4	5.80	39.8	7.08	46.3	8.41	49.5	9.16	52.7	10.1	56.1	10.9	57.3	11.0
		20	33.4	5.91	39.8	7.22	46.3	8.91	49.5	9.84	52.7	10.8	55.3	11.4	56.5	11.5
		21	33.4	5.97	39.8	7.44	46.3	9.23	49.5	10.2	52.7	11.2	54.9	11.7	56.1	11.8
		23	33.4	6.25	39.8	7.96	46.3	9.89	49.5	10.9	52.7	12.0	54.1	12.2	55.3	12.3
		25	33.4	6.67	39.8	8.51	46.3	10.6	49.5	11.7	52.2	12.7	53.4	12.8	54.6	12.9
		27	33.4	7.12	39.8	9.10	46.3	11.3	49.5	12.5	51.4	13.2	52.6	13.3	53.8	13.4
		29	33.4	7.58	39.8	9.71	46.3	12.1	49.5	13.4	50.6	13.7	51.8	13.8	53.0	14.0
		31	33.4	8.08	39.8	10.4	46.3	12.9	49.3	14.2	49.9	14.3	51.1	14.4	52.3	14.5
		33	33.4	8.60	39.8	11.0	46.3	13.8	48.5	14.7	49.1	14.8	50.3	14.9	51.5	15.1
		35	33.4	9.14	39.8	11.8	46.3	14.7	47.7	15.3	48.3	15.3	49.5	15.5	50.7	15.6
		37	33.4	9.72	39.8	12.5	46.3	15.7	46.9	15.8	47.5	15.9	48.8	16.0	50.0	16.2
		39	33.4	10.3	39.8	13.3	45.6	16.3	46.2	16.3	46.8	16.4	48.0	16.6	49.2	16.7
100	400 (45.00)	10	30.4	4.86	36.2	5.89	42.1	6.98	45.0	7.54	47.9	8.11	53.8	9.27	59.2	9.27
		12	30.4	4.94	36.2	6.00	42.1	7.11	45.0	7.68	47.9	8.26	53.8	9.44	58.5	9.44
		14	30.4	5.03	36.2	6.11	42.1	7.25	45.0	7.83	47.9	8.42	53.8	9.63	57.7	9.63
		16	30.4	5.12	36.2	6.23	42.1	7.39	45.0	7.98	47.9	8.59	53.8	9.81	56.9	9.79
		18	30.4	5.22	36.2	6.35	42.1	7.53	45.0	8.14	47.9	8.76	53.8	10.4	56.1	10.9
		20	30.4	5.32	36.2	6.47	42.1	7.76	45.0	8.55	47.9	9.38	53.8	11.2	55.4	11.4
		21	30.4	5.37	36.2	6.54	42.1	8.03	45.0	8.86	47.9	9.72	53.8	11.6	55.0	11.7
		23	30.4	5.51	36.2	6.97	42.1	8.61	45.0	9.49	47.9	10.4	53.1	12.1	54.2	12.2
		25	30.4	5.88	36.2	7.45	42.1	9.21	45.0	10.2	47.9	11.2	52.4	12.7	53.5	12.8
		27	30.4	6.27	36.2	7.95	42.1	9.84	45.0	10.9	47.9	11.9	51.6	13.2	52.7	13.3
		29	30.4	6.67	36.2	8.48	42.1	10.5	45.0	11.6	47.9	12.8	50.8	13.7	51.9	13.8
		31	30.4	7.10	36.2	9.04	42.1	11.2	45.0	12.4	47.9	13.6	50.1	14.3	51.1	14.4
		33	30.4	7.55	36.2	9.63	42.1	12.0	45.0	13.2	47.9	14.6	49.3	14.8	50.4	14.9
		35	30.4	8.03	36.2	10.2	42.1	12.7	45.0	14.1	47.4	15.2	48.5	15.4	49.6	15.5
		37	30.4	8.53	36.2	10.9	42.1	13.6	45.0	15.0	46.6	15.8	47.7	15.9	48.8	16.0
		39	30.4	9.06	36.2	11.6	42.1	14.5	45.0	16.0	45.9	16.3	47.0	16.4	48.1	16.6

4TW31482-1A

NOTES - ANMERKUNGEN - Σημειώσεις - NOTAS - REMARQUES - NOTE - OPMERKINGEN - примечания - NOTLAR

1 The above table shows the average value of conditions which may occur.
Die obige Tabelle zeigt den Durchschnittswert der Bedingungen, die auftreten können.
Στον παραπάνω πίνακα αναγράφεται η μέση τιμή για συνθήκες που μπορεί να προκύψουν.
La tabla de arriba muestra el valor medio de condiciones que pueden ocurrir.
Le tableau ci-dessus donne la valeur moyenne pour des conditions qui peuvent survenir.
La tabella in alto mostra il valore delle condizioni medie che si possono riscontrare.
De tabel hierboven geeft de gemiddelde waarde aan van situaties die kunnen voorvallen.
Таблица расположенная выше показывает среднее значение условий, которые могут наступить.
Yukarıdaki tablo meydana gelebilecek koşulların ortalama değerini göstermektedir.

4 Capacity tables

4 - 2 Cooling capacity tables

REYQ16P8

TC: Total Capacity: kW ; PI: Power Input: kW (compressor + outdoor fan motor)

Combination (%)	Capacity index (kW)	Outdoor air temp. (°CDB)	Indoor air temperature: 14.0 °CWB / 20.0 °CDB		16.0 °CWB / 23.0 °CDB		18.0 °CWB / 26.0 °CDB		19.0 °CWB / 27.0 °CDB		20.0 °CWB / 28.0 °CDB		22.0 °CWB / 30.0 °CDB		24.0 °CWB / 32.0 °CDB	
			TC	PI	TC	PI	TC	PI	TC	PI	TC	PI	TC	PI	TC	PI
			kW	kW	kW	kW	kW	kW	kW	kW	kW	kW	kW	kW	kW	kW
90	360 (40.50)	10	27.3	4.35	32.6	5.24	37.9	6.19	40.5	6.68	43.1	7.18	48.4	8.20	53.7	9.25
		12	27.3	4.42	32.6	5.34	37.9	6.31	40.5	6.81	43.1	7.32	48.4	8.36	53.7	9.42
		14	27.3	4.50	32.6	5.44	37.9	6.42	40.5	6.94	43.1	7.46	48.4	8.52	53.7	9.60
		16	27.3	4.58	32.6	5.54	37.9	6.55	40.5	7.07	43.1	7.60	48.4	8.69	53.7	9.79
		18	27.3	4.66	32.6	5.64	37.9	6.68	40.5	7.21	43.1	7.75	48.4	8.86	53.7	10.3
		20	27.3	4.75	32.6	5.75	37.9	6.81	40.5	7.35	43.1	8.04	48.4	9.52	53.7	11.1
		21	27.3	4.79	32.6	5.81	37.9	6.93	40.5	7.61	43.1	8.33	48.4	9.86	53.7	11.5
		23	27.3	4.88	32.6	6.05	37.9	7.41	40.5	8.15	43.1	8.92	48.4	10.6	53.1	12.1
		25	27.3	5.14	32.6	6.45	37.9	7.92	40.5	8.72	43.1	9.55	48.4	11.3	52.3	12.7
		27	27.3	5.47	32.6	6.88	37.9	8.46	40.5	9.31	43.1	10.2	48.4	12.1	51.6	13.2
		29	27.3	5.82	32.6	7.34	37.9	9.03	40.5	9.94	43.1	10.9	48.4	13.0	50.8	13.7
		31	27.3	6.19	32.6	7.81	37.9	9.62	40.5	10.6	43.1	11.6	48.4	13.8	50.0	14.3
		33	27.3	6.58	32.6	8.31	37.9	10.3	40.5	11.3	43.1	12.4	48.3	14.7	49.3	14.8
		35	27.3	6.98	32.6	8.84	37.9	10.9	40.5	12.0	43.1	13.2	47.5	15.2	48.5	15.4
		37	27.3	7.41	32.6	9.40	37.9	11.6	40.5	12.8	43.1	14.1	46.7	15.8	47.7	15.9
		39	27.3	7.86	32.6	9.99	37.9	12.4	40.5	13.7	43.1	15.0	46.0	16.3	47.0	16.4
80	320 (36.00)	10	24.3	3.86	29.0	4.62	33.7	5.43	36.0	5.85	38.3	6.28	43.0	7.16	47.7	8.07
		12	24.3	3.92	29.0	4.70	33.7	5.53	36.0	5.96	38.3	6.40	43.0	7.30	47.7	8.22
		14	24.3	3.99	29.0	4.78	33.7	5.63	36.0	6.07	38.3	6.52	43.0	7.43	47.7	8.38
		16	24.3	4.06	29.0	4.87	33.7	5.74	36.0	6.18	38.3	6.64	43.0	7.58	47.7	8.54
		18	24.3	4.13	29.0	4.96	33.7	5.84	36.0	6.30	38.3	6.77	43.0	7.73	47.7	8.71
		20	24.3	4.20	29.0	5.05	33.7	5.96	36.0	6.43	38.3	6.91	43.0	8.01	47.7	9.32
		21	24.3	4.24	29.0	5.10	33.7	6.02	36.0	6.49	38.3	7.05	43.0	8.30	47.7	9.65
		23	24.3	4.31	29.0	5.20	33.7	6.31	36.0	6.91	38.3	7.54	43.0	8.89	47.7	10.3
		25	24.3	4.45	29.0	5.54	33.7	6.74	36.0	7.39	38.3	8.06	43.0	9.51	47.7	11.1
		27	24.3	4.74	29.0	5.90	33.7	7.19	36.0	7.88	38.3	8.61	43.0	10.2	47.7	11.9
		29	24.3	5.04	29.0	6.28	33.7	7.66	36.0	8.41	38.3	9.19	43.0	10.9	47.7	12.7
		31	24.3	5.35	29.0	6.68	33.7	8.16	36.0	8.96	38.3	9.80	43.0	11.6	47.7	13.5
		33	24.3	5.67	29.0	7.10	33.7	8.69	36.0	9.54	38.3	10.4	43.0	12.4	47.7	14.4
		35	24.3	6.02	29.0	7.54	33.7	9.24	36.0	10.2	38.3	11.1	43.0	13.2	47.4	15.2
		37	24.3	6.38	29.0	8.01	33.7	9.83	36.0	10.8	38.3	11.8	43.0	14.0	46.6	15.8
		39	24.3	6.76	29.0	8.50	33.7	10.4	36.0	11.5	38.3	12.6	43.0	15.0	45.8	16.3
70	280 (31.50)	10	21.3	3.39	25.4	4.03	29.5	4.70	31.5	5.05	33.5	5.41	37.6	6.15	41.7	6.92
		12	21.3	3.45	25.4	4.09	29.5	4.78	31.5	5.14	33.5	5.51	37.6	6.26	41.7	7.05
		14	21.3	3.50	25.4	4.16	29.5	4.87	31.5	5.23	33.5	5.61	37.6	6.38	41.7	7.18
		16	21.3	3.56	25.4	4.24	29.5	4.96	31.5	5.33	33.5	5.71	37.6	6.50	41.7	7.32
		18	21.3	3.61	25.4	4.31	29.5	5.05	31.5	5.43	33.5	5.82	37.6	6.63	41.7	7.46
		20	21.3	3.68	25.4	4.39	29.5	5.14	31.5	5.54	33.5	5.94	37.6	6.76	41.7	7.67
		21	21.3	3.71	25.4	4.43	29.5	5.19	31.5	5.59	33.5	5.99	37.6	6.87	41.7	7.94
		23	21.3	3.77	25.4	4.51	29.5	5.30	31.5	5.78	33.5	6.28	37.6	7.35	41.7	8.51
		25	21.3	3.84	25.4	4.69	29.5	5.65	31.5	6.17	33.5	6.71	37.6	7.86	41.7	9.10
		27	21.3	4.06	25.4	4.99	29.5	6.02	31.5	6.58	33.5	7.16	37.6	8.39	41.7	9.73
		29	21.3	4.31	25.4	5.30	29.5	6.41	31.5	7.01	33.5	7.63	37.6	8.95	41.7	10.4
		31	21.3	4.57	25.4	5.63	29.5	6.82	31.5	7.46	33.5	8.12	37.6	9.54	41.7	11.1
		33	21.3	4.84	25.4	5.98	29.5	7.25	31.5	7.93	33.5	8.65	37.6	10.2	41.7	11.8
		35	21.3	5.12	25.4	6.35	29.5	7.70	31.5	8.43	33.5	9.20	37.6	10.8	41.7	12.6
		37	21.3	5.43	25.4	6.73	29.5	8.18	31.5	8.96	33.5	9.78	37.6	11.5	41.7	13.4
		39	21.3	5.74	25.4	7.13	29.5	8.69	31.5	9.52	33.5	10.4	37.6	12.3	41.7	14.3
60	240 (27.00)	10	18.2	2.95	21.7	3.47	25.2	4.01	27.0	4.29	28.8	4.59	32.3	5.19	35.8	5.81
		12	18.2	3.00	21.7	3.52	25.2	4.08	27.0	4.37	28.8	4.66	32.3	5.28	35.8	5.92
		14	18.2	3.04	21.7	3.57	25.2	4.15	27.0	4.44	28.8	4.75	32.3	5.37	35.8	6.03
		16	18.2	3.08	21.7	3.63	25.2	4.22	27.0	4.52	28.8	4.83	32.3	5.47	35.8	6.14
		18	18.2	3.13	21.7	3.69	25.2	4.29	27.0	4.60	28.8	4.92	32.3	5.58	35.8	6.26
		20	18.2	3.18	21.7	3.76	25.2	4.37	27.0	4.69	28.8	5.01	32.3	5.68	35.8	6.38
		21	18.2	3.21	21.7	3.79	25.2	4.41	27.0	4.73	28.8	5.06	32.3	5.74	35.8	6.45
		23	18.2	3.26	21.7	3.85	25.2	4.49	27.0	4.82	28.8	5.16	32.3	5.96	35.8	6.85
		25	18.2	3.31	21.7	3.92	25.2	4.66	27.0	5.06	28.8	5.48	32.3	6.37	35.8	7.32
		27	18.2	3.43	21.7	4.16	25.2	4.96	27.0	5.39	28.8	5.84	32.3	6.79	35.8	7.82
		29	18.2	3.64	21.7	4.42	25.2	5.28	27.0	5.74	28.8	6.21	32.3	7.23	35.8	8.34
		31	18.2	3.85	21.7	4.68	25.2	5.60	27.0	6.10	28.8	6.61	32.3	7.70	35.8	8.88
		33	18.2	4.07	21.7	4.96	25.2	5.95	27.0	6.48	28.8	7.03	32.3	8.20	35.8	9.46
		35	18.2	4.31	21.7	5.26	25.2	6.31	27.0	6.87	28.8	7.46	32.3	8.72	35.8	10.1
		37	18.2	4.55	21.7	5.57	25.2	6.69	27.0	7.29	28.8	7.92	32.3	9.26	35.8	10.7
		39	18.2	4.81	21.7	5.89	25.2	7.09	27.0	7.74	28.8	8.41	32.3	9.84	35.8	11.4
50	200 (22.50)	10	15.2	2.54	18.1	2.94	21.0	3.36	22.5	3.58	24.0	3.81	26.9	4.28	29.8	4.76
		12	15.2	2.57	18.1	2.98	21.0	3.41	22.5	3.64	24.0	3.87	26.9	4.35	29.8	4.85
		14	15.2	2.60	18.1	3.02	21.0	3.47	22.5	3.70	24.0	3.93	26.9	4.42	29.8	4.93
		16	15.2	2.64	18.1	3.07	21.0	3.52	22.5	3.76	24.0	4.00	26.9	4.50	29.8	5.02
		18	15.2	2.68	18.1	3.11	21.0	3.58	22.5	3.82	24.0	4.07	26.9	4.58	29.8	5.11
		20	15.2	2.72	18.1	3.16	21.0	3.64	22.5	3.89	24.0	4.14	26.9	4.67	29.8	5.21
		21	15.2	2.74	18.1	3.19	21.0	3.67	22.5	3.92	24.0	4.18	26.9	4.71	29.8	5.26
		23	15.2	2.78	18.1	3.24	21.0	3.73	22.5	3.99	24.0	4.25	26.9	4.80	29.8	5.38
		25	15.2	2.82	18.1	3.29	21.0	3.80	22.5	4.07	24.0	4.38	26.9	5.04	29.8	5.74
		27	15.2	2.86	18.1	3.41	21.0	4.01	22.5	4.33	24.0	4.66	26.9	5.36	29.8	6.12
		29	15.2	3.03	18.1	3.61	21.0	4.26	22.5	4.60	24.0	4.95	26.9	5.71	29.8	6.51
		31	15.2	3.20	18.1	3.83	21.0	4.51	22.5	4.88	24.0	5.26	26.9	6.06	29.8	6.93
		33	15.2	3.38	18.1	4.05	21.0	4.78	22.5	5.17	24.0	5.58	26.9	6.44	29.8	7.37
		35	15.2	3.57	18.1	4.28	21.0	5.06	22.5	5.48	24.0	5.92	26.9	6.84	29.8	7.83
		37	15.2	3.76	18.1	4.52	21.0	5.36	22.5	5.80	24.0	6.27	26.9	7.26	29.8	8.32
		39	15.2	3.97	18.1	4.78	21.0	5.67	22.5	6.15	24.0	6.64	26.9	7.70	29.8	8.83

4TW31482-1A

4 Capacity tables

4 - 2 Cooling capacity tables

REYQ18P9

TC: Total Capacity: kW ; PI: Power Input: kW (compressor + outdoor fan motor)

Combination (%)	Capacity index (kW)	Outdoor air temp. (°CDB)	Indoor air temperature: 14.0 °CWB 20.0 °CDB TC kW	14.0 °CWB 20.0 °CDB PI kW	16.0 °CWB 23.0 °CDB TC kW	16.0 °CWB 23.0 °CDB PI kW	18.0 °CWB 26.0 °CDB TC kW	18.0 °CWB 26.0 °CDB PI kW	19.0 °CWB 27.0 °CDB TC kW	19.0 °CWB 27.0 °CDB PI kW	20.0 °CWB 28.0 °CDB TC kW	20.0 °CWB 28.0 °CDB PI kW	22.0 °CWB 30.0 °CDB TC kW	22.0 °CWB 30.0 °CDB PI kW	24.0 °CWB 32.0 °CDB TC kW	24.0 °CWB 32.0 °CDB PI kW
130	585 (65.52)	10	44.2	5.85	52.7	7.16	61.3	8.51	63.5	8.51	64.3	8.51	65.9	8.51	67.5	8.51
		12	44.2	5.96	52.7	7.29	61.3	8.68	62.7	8.68	63.5	8.68	65.1	8.68	66.6	8.68
		14	44.2	6.07	52.7	7.43	61.0	8.78	61.8	8.78	62.6	8.78	64.2	8.78	65.8	8.78
		16	44.2	6.18	52.7	7.58	60.2	8.74	61.0	8.77	61.8	8.77	63.4	8.79	65.0	8.79
		18	44.2	6.31	52.7	7.73	59.4	9.08	60.2	9.12	61.0	9.17	62.6	9.26	64.2	9.34
		20	44.2	6.43	52.7	8.23	58.6	9.52	59.4	9.57	60.2	9.61	61.8	9.71	63.4	9.80
		21	44.2	6.61	52.7	8.53	58.2	9.74	59.0	9.79	59.8	9.84	61.4	9.94	63.0	10.0
		23	44.2	7.08	52.7	9.14	57.4	10.2	58.1	10.2	58.9	10.3	60.5	10.4	62.1	10.5
		25	44.2	7.57	52.7	9.79	56.5	10.6	57.3	10.7	58.1	10.7	59.7	10.9	61.3	11.0
		27	44.2	8.09	52.7	10.5	55.7	11.1	56.5	11.1	57.3	11.2	58.9	11.3	60.5	11.4
		29	44.2	8.63	52.7	11.2	54.9	11.5	55.7	11.6	56.5	11.7	58.1	11.8	59.7	11.9
		31	44.2	9.20	52.5	11.8	54.1	12.0	54.9	12.0	55.7	12.1	57.3	12.2	58.9	12.4
		33	44.2	9.81	51.7	12.3	53.3	12.4	54.1	12.5	54.8	12.6	56.4	12.7	58.0	12.8
		35	44.2	10.5	50.8	12.7	52.4	12.9	53.2	13.0	54.0	13.0	55.6	13.2	57.2	13.3
		37	44.2	11.1	50.0	13.2	51.6	13.3	52.4	13.4	53.2	13.5	54.8	13.7	56.4	13.8
		39	44.2	11.8	49.2	13.6	50.8	13.8	51.6	13.9	52.4	14.0	54.0	14.1	55.6	14.3
120	540 (60.48)	10	40.8	5.34	48.7	6.53	56.5	7.76	60.5	8.39	63.3	8.39	64.7	8.39	66.2	8.39
		12	40.8	5.44	48.7	6.65	56.5	7.91	60.5	8.55	62.5	8.55	63.9	8.55	65.4	8.55
		14	40.8	5.54	48.7	6.78	56.5	8.06	60.5	8.71	61.6	8.71	63.1	8.71	64.6	8.71
		16	40.8	5.65	48.7	6.91	56.5	8.22	60.1	8.77	60.8	8.77	62.3	8.79	63.8	8.79
		18	40.8	5.76	48.7	7.04	56.5	8.50	59.3	9.07	60.0	9.11	61.5	9.19	62.9	9.27
		20	40.8	5.87	48.7	7.32	56.5	9.13	58.4	9.51	59.2	9.55	60.6	9.64	62.1	9.73
		21	40.8	5.93	48.7	7.58	56.5	9.46	58.0	9.73	58.8	9.78	60.2	9.87	61.7	9.96
		23	40.8	6.33	48.7	8.13	56.5	10.1	57.2	10.2	57.9	10.2	59.4	10.3	60.9	10.4
		25	40.8	6.77	48.7	8.70	55.7	10.6	56.4	10.6	57.1	10.7	58.6	10.8	60.1	10.9
		27	40.8	7.22	48.7	9.30	54.8	11.0	55.6	11.1	56.3	11.1	57.8	11.2	59.2	11.3
		29	40.8	7.70	48.7	9.93	54.0	11.5	54.7	11.5	55.5	11.6	57.0	11.7	58.4	11.8
		31	40.8	8.21	48.7	10.6	53.2	11.9	53.9	12.0	54.7	12.0	56.1	12.1	57.6	12.3
		33	40.8	8.74	48.7	11.3	52.4	12.4	53.1	12.4	53.8	12.5	55.3	12.6	56.8	12.7
		35	40.8	9.31	48.7	12.1	51.6	12.8	52.3	12.9	53.0	12.9	54.5	13.1	56.0	13.2
		37	40.8	9.91	48.7	12.8	50.7	13.3	51.5	13.3	52.2	13.4	53.7	13.5	55.1	13.7
		39	40.8	10.5	48.4	13.6	49.9	13.7	50.6	13.8	51.4	13.9	52.9	14.0	54.3	14.2
110	495 (55.44)	10	37.4	4.85	44.6	5.91	51.8	7.02	55.4	7.58	59.0	8.16	63.6	8.35	65.0	8.35
		12	37.4	4.94	44.6	6.02	51.8	7.15	55.4	7.73	59.0	8.31	62.8	8.51	64.1	8.51
		14	37.4	5.03	44.6	6.13	51.8	7.29	55.4	7.88	59.0	8.47	62.0	8.67	63.3	8.67
		16	37.4	5.12	44.6	6.25	51.8	7.43	55.4	8.03	59.0	8.64	61.2	8.79	62.5	8.79
		18	37.4	5.22	44.6	6.37	51.8	7.58	55.4	8.25	59.0	9.05	60.3	9.13	61.7	9.20
		20	37.4	5.32	44.6	6.50	51.8	8.03	55.4	8.87	58.2	9.49	59.5	9.57	60.9	9.65
		21	37.4	5.37	44.6	6.70	51.8	8.31	55.4	9.19	57.8	9.72	59.1	9.80	60.5	9.88
		23	37.4	5.63	44.6	7.17	51.8	8.91	55.4	9.85	56.9	10.2	58.3	10.2	59.6	10.3
		25	37.4	6.01	44.6	7.67	51.8	9.54	55.4	10.6	56.1	10.6	57.5	10.7	58.8	10.8
		27	37.4	6.41	44.6	8.19	51.8	10.2	54.6	11.0	55.3	11.0	56.6	11.1	58.0	11.2
		29	37.4	6.83	44.6	8.75	51.8	10.9	53.8	11.4	54.5	11.5	55.8	11.6	57.2	11.7
		31	37.4	7.27	44.6	9.33	51.8	11.6	53.0	11.9	53.7	11.9	55.0	12.1	56.4	12.2
		33	37.4	7.74	44.6	9.94	51.5	12.3	52.2	12.3	52.8	12.4	54.2	12.5	55.5	12.6
		35	37.4	8.24	44.6	10.6	50.7	12.7	51.3	12.8	52.0	12.8	53.4	13.0	54.7	13.1
		37	37.4	8.76	44.6	11.3	49.8	13.2	50.5	13.2	51.2	13.3	52.5	13.4	53.9	13.6
		39	37.4	9.31	44.6	12.0	49.0	13.6	49.7	13.7	50.4	13.8	51.7	13.9	53.1	14.0
100	450 (50.40)	10	34.0	4.38	40.6	5.31	47.1	6.29	50.4	6.79	53.7	7.31	60.2	8.35	63.7	8.35
		12	34.0	4.45	40.6	5.40	47.1	6.40	50.4	6.92	53.7	7.44	60.2	8.51	62.9	8.51
		14	34.0	4.53	40.6	5.50	47.1	6.53	50.4	7.05	53.7	7.59	60.2	8.67	62.1	8.67
		16	34.0	4.61	40.6	5.61	47.1	6.65	50.4	7.19	53.7	7.73	60.0	8.79	61.3	8.79
		18	34.0	4.70	40.6	5.72	47.1	6.78	50.4	7.33	53.7	7.89	59.2	9.07	60.4	9.13
		20	34.0	4.79	40.6	5.83	47.1	6.99	50.4	7.70	53.7	8.45	58.4	9.51	59.6	9.58
		21	34.0	4.84	40.6	5.89	47.1	7.24	50.4	7.98	53.7	8.75	58.0	9.73	59.2	9.80
		23	34.0	4.96	40.6	6.28	47.1	7.75	50.4	8.55	53.7	9.39	57.2	10.2	58.4	10.3
		25	34.0	5.30	40.6	6.71	47.1	8.29	50.4	9.15	53.7	10.1	56.3	10.6	57.6	10.7
		27	34.0	5.64	40.6	7.16	47.1	8.86	50.4	9.79	53.7	10.8	55.5	11.1	56.7	11.2
		29	34.0	6.01	40.6	7.64	47.1	9.47	50.4	10.5	53.5	11.4	54.7	11.5	55.9	11.6
		31	34.0	6.40	40.6	8.14	47.1	10.1	50.4	11.2	52.7	11.9	53.9	12.0	55.1	12.1
		33	34.0	6.80	40.6	8.67	47.1	10.8	50.4	11.9	51.8	12.3	53.1	12.4	54.3	12.5
		35	34.0	7.23	40.6	9.23	47.1	11.5	50.4	12.7	51.0	12.8	52.2	12.9	53.5	13.0
		37	34.0	7.68	40.6	9.82	47.1	12.2	49.6	13.1	50.2	13.2	51.4	13.3	52.6	13.4
		39	34.0	8.16	40.6	10.4	47.1	13.0	48.8	13.6	49.4	13.7	50.6	13.8	51.8	13.9

4TW31482-1A

NOTES - ANMERKUNGEN - Σημειώσεις - NOTAS - REMARQUES - NOTE - OPMERKINGEN - примечания - NOTLAR

1 The above table shows the average value of conditions which may occur.
Die obige Tabelle zeigt den Durchschnittswert der Bedingungen, die auftreten können.
Στον παραπάνω πίνακα αναγράφεται η μέση τιμή για συνθήκες που μπορεί να προκύψουν.
La tabla de arriba muestra el valor medio de condiciones que pueden ocurrir.
Le tableau ci-dessus donne la valeur moyenne pour des conditions qui peuvent survenir.
La tabella in alto mostra il valore delle condizioni medie che si possono riscontrare.
De tabel hierboven geeft de gemiddelde waarde aan van situaties die kunnen voorvallen.
Таблица расположенная выше показывает среднее значение условий, которые могут наступить.
Yukarıdaki tablo meydana gelebilecek koşulların ortalama değerini göstermektedir.

4 Capacity tables

4 - 2 Cooling capacity tables

REYQ18P9

TC: Total Capacity: kW ; PI: Power Input: kW (compressor + outdoor fan motor)

Combination (%)	Capacity index (kW)	Outdoor air temp. (°CDB)	Indoor air temperature: 14.0 °CWB / 20.0 °CDB		16.0 °CWB / 23.0 °CDB		18.0 °CWB / 26.0 °CDB		19.0 °CWB / 27.0 °CDB		20.0 °CWB / 28.0 °CDB		22.0 °CWB / 30.0 °CDB		24.0 °CWB / 32.0 °CDB	
			TC	PI	TC	PI	TC	PI	TC	PI	TC	PI	TC	PI	TC	PI
			kW	kW	kW	kW	kW	kW	kW	kW	kW	kW	kW	kW	kW	kW
90	405 (45.36)	10	30.6	3.92	36.5	4.72	42.4	5.58	45.4	6.02	48.3	6.47	54.2	7.39	60.1	8.33
		12	30.6	3.98	36.5	4.81	42.4	5.68	45.4	6.13	48.3	6.59	54.2	7.53	60.1	8.49
		14	30.6	4.05	36.5	4.90	42.4	5.79	45.4	6.25	48.3	6.72	54.2	7.67	60.1	8.65
		16	30.6	4.12	36.5	4.99	42.4	5.90	45.4	6.37	48.3	6.85	54.2	7.82	60.0	8.79
		18	30.6	4.20	36.5	5.08	42.4	6.01	45.4	6.49	48.3	6.98	54.2	7.98	59.2	9.07
		20	30.6	4.28	36.5	5.18	42.4	6.13	45.4	6.62	48.3	7.24	54.2	8.57	58.4	9.51
		21	30.6	4.32	36.5	5.23	42.4	6.24	45.4	6.85	48.3	7.50	54.2	8.88	58.0	9.73
		23	30.6	4.40	36.5	5.45	42.4	6.68	45.4	7.34	48.3	8.04	54.2	9.53	57.1	10.2
		25	30.6	4.63	36.5	5.81	42.4	7.14	45.4	7.85	48.3	8.60	54.2	10.2	56.3	10.6
		27	30.6	4.93	36.5	6.20	42.4	7.62	45.4	8.39	48.3	9.19	54.2	10.9	55.5	11.1
		29	30.6	5.25	36.5	6.61	42.4	8.13	45.4	8.95	48.3	9.82	53.6	11.4	54.7	11.5
		31	30.6	5.58	36.5	7.04	42.4	8.67	45.4	9.55	48.3	10.5	52.8	11.9	53.9	12.0
		33	30.6	5.92	36.5	7.49	42.4	9.24	45.4	10.2	48.3	11.2	51.9	12.3	53.0	12.4
		35	30.6	6.29	36.5	7.96	42.4	9.84	45.4	10.9	48.3	11.9	51.1	12.8	52.2	12.9
		37	30.6	6.68	36.5	8.46	42.4	10.5	45.4	11.6	48.3	12.7	50.3	13.2	51.4	13.3
		39	30.6	7.08	36.5	8.99	42.4	11.1	45.4	12.3	48.3	13.5	49.5	13.7	50.6	13.8
80	360 (40.32)	10	27.2	3.48	32.5	4.16	37.7	4.89	40.3	5.27	42.9	5.66	48.2	6.45	53.4	7.27
		12	27.2	3.53	32.5	4.24	37.7	4.98	40.3	5.37	42.9	5.76	48.2	6.57	53.4	7.40
		14	27.2	3.59	32.5	4.31	37.7	5.07	40.3	5.47	42.9	5.87	48.2	6.70	53.4	7.55
		16	27.2	3.65	32.5	4.39	37.7	5.17	40.3	5.57	42.9	5.98	48.2	6.83	53.4	7.69
		18	27.2	3.72	32.5	4.47	37.7	5.26	40.3	5.68	42.9	6.10	48.2	6.96	53.4	7.85
		20	27.2	3.78	32.5	4.55	37.7	5.37	40.3	5.79	42.9	6.22	48.2	7.22	53.4	8.39
		21	27.2	3.82	32.5	4.59	37.7	5.42	40.3	5.85	42.9	6.35	48.2	7.47	53.4	8.69
		23	27.2	3.89	32.5	4.68	37.7	5.68	40.3	6.23	42.9	6.79	48.2	8.01	53.4	9.32
		25	27.2	4.01	32.5	4.99	37.7	6.07	40.3	6.65	42.9	7.26	48.2	8.57	53.4	9.98
		27	27.2	4.27	32.5	5.31	37.7	6.47	40.3	7.10	42.9	7.76	48.2	9.16	53.4	10.7
		29	27.2	4.54	32.5	5.65	37.7	6.90	40.3	7.57	42.9	8.28	48.2	9.78	53.4	11.4
		31	27.2	4.82	32.5	6.01	37.7	7.35	40.3	8.07	42.9	8.82	48.2	10.4	52.6	11.9
		33	27.2	5.11	32.5	6.39	37.7	7.82	40.3	8.59	42.9	9.40	48.2	11.1	51.8	12.3
		35	27.2	5.42	32.5	6.79	37.7	8.32	40.3	9.15	42.9	10.0	48.2	11.9	51.0	12.8
		37	27.2	5.74	32.5	7.21	37.7	8.85	40.3	9.73	42.9	10.7	48.2	12.6	50.1	13.2
		39	27.2	6.09	32.5	7.65	37.7	9.41	40.3	10.4	42.9	11.3	48.2	13.5	49.3	13.7
70	315 (35.28)	10	23.8	3.06	28.4	3.63	33.0	4.24	35.3	4.55	37.6	4.87	42.2	5.54	46.8	6.23
		12	23.8	3.10	28.4	3.69	33.0	4.31	35.3	4.63	37.6	4.96	42.2	5.64	46.8	6.35
		14	23.8	3.15	28.4	3.75	33.0	4.39	35.3	4.72	37.6	5.05	42.2	5.75	46.8	6.47
		16	23.8	3.20	28.4	3.81	33.0	4.46	35.3	4.80	37.6	5.15	42.2	5.86	46.8	6.59
		18	23.8	3.26	28.4	3.88	33.0	4.55	35.3	4.89	37.6	5.25	42.2	5.97	46.8	6.72
		20	23.8	3.31	28.4	3.95	33.0	4.63	35.3	4.99	37.6	5.35	42.2	6.09	46.8	6.91
		21	23.8	3.34	28.4	3.99	33.0	4.68	35.3	5.03	37.6	5.40	42.2	6.19	46.8	7.16
		23	23.8	3.40	28.4	4.06	33.0	4.77	35.3	5.20	37.6	5.66	42.2	6.62	46.8	7.66
		25	23.8	3.46	28.4	4.22	33.0	5.09	35.3	5.56	37.6	6.04	42.2	7.08	46.8	8.20
		27	23.8	3.65	28.4	4.49	33.0	5.42	35.3	5.92	37.6	6.45	42.2	7.56	46.8	8.76
		29	23.8	3.88	28.4	4.78	33.0	5.77	35.3	6.31	37.6	6.87	42.2	8.06	46.8	9.36
		31	23.8	4.11	28.4	5.07	33.0	6.14	35.3	6.72	37.6	7.32	42.2	8.60	46.8	9.98
		33	23.8	4.36	28.4	5.39	33.0	6.53	35.3	7.14	37.6	7.79	42.2	9.16	46.8	10.6
		35	23.8	4.62	28.4	5.72	33.0	6.94	35.3	7.60	37.6	8.28	42.2	9.75	46.8	11.3
		37	23.8	4.89	28.4	6.06	33.0	7.37	35.3	8.07	37.6	8.81	42.2	10.4	46.8	12.1
		39	23.8	5.17	28.4	6.43	33.0	7.82	35.3	8.58	37.6	9.36	42.2	11.0	46.8	12.9
60	270 (30.24)	10	20.4	2.66	24.3	3.12	28.3	3.61	30.2	3.87	32.2	4.13	36.1	4.67	40.1	5.23
		12	20.4	2.70	24.3	3.17	28.3	3.67	30.2	3.93	32.2	4.20	36.1	4.75	40.1	5.33
		14	20.4	2.74	24.3	3.22	28.3	3.73	30.2	4.00	32.2	4.27	36.1	4.84	40.1	5.43
		16	20.4	2.78	24.3	3.27	28.3	3.80	30.2	4.07	32.2	4.35	36.1	4.93	40.1	5.53
		18	20.4	2.82	24.3	3.33	28.3	3.86	30.2	4.14	32.2	4.43	36.1	5.02	40.1	5.64
		20	20.4	2.86	24.3	3.38	28.3	3.93	30.2	4.22	32.2	4.51	36.1	5.12	40.1	5.75
		21	20.4	2.89	24.3	3.41	28.3	3.97	30.2	4.26	32.2	4.56	36.1	5.17	40.1	5.81
		23	20.4	2.93	24.3	3.47	28.3	4.04	30.2	4.34	32.2	4.64	36.1	5.37	40.1	6.17
		25	20.4	2.98	24.3	3.53	28.3	4.20	30.2	4.56	32.2	4.94	36.1	5.74	40.1	6.60
		27	20.4	3.09	24.3	3.75	28.3	4.47	30.2	4.86	32.2	5.26	36.1	6.12	40.1	7.04
		29	20.4	3.28	24.3	3.98	28.3	4.75	30.2	5.17	32.2	5.60	36.1	6.52	40.1	7.51
		31	20.4	3.47	24.3	4.22	28.3	5.05	30.2	5.49	32.2	5.95	36.1	6.94	40.1	8.00
		33	20.4	3.67	24.3	4.47	28.3	5.36	30.2	5.83	32.2	6.33	36.1	7.38	40.1	8.52
		35	20.4	3.88	24.3	4.74	28.3	5.68	30.2	6.19	32.2	6.72	36.1	7.85	40.1	9.07
		37	20.4	4.10	24.3	5.02	28.3	6.03	30.2	6.57	32.2	7.14	36.1	8.34	40.1	9.65
		39	20.4	4.33	24.3	5.31	28.3	6.39	30.2	6.97	32.2	7.58	36.1	8.87	40.1	10.3
50	225 (25.20)	10	17.0	2.29	20.3	2.65	23.6	3.03	25.2	3.23	26.8	3.43	30.1	3.85	33.4	4.29
		12	17.0	2.32	20.3	2.68	23.6	3.07	25.2	3.28	26.8	3.49	30.1	3.92	33.4	4.37
		14	17.0	2.35	20.3	2.72	23.6	3.12	25.2	3.33	26.8	3.54	30.1	3.98	33.4	4.44
		16	17.0	2.38	20.3	2.76	23.6	3.17	25.2	3.38	26.8	3.60	30.1	4.05	33.4	4.52
		18	17.0	2.41	20.3	2.80	23.6	3.22	25.2	3.44	26.8	3.66	30.1	4.13	33.4	4.61
		20	17.0	2.45	20.3	2.85	23.6	3.28	25.2	3.50	26.8	3.73	30.1	4.20	33.4	4.69
		21	17.0	2.46	20.3	2.87	23.6	3.30	25.2	3.53	26.8	3.76	30.1	4.24	33.4	4.74
		23	17.0	2.50	20.3	2.92	23.6	3.36	25.2	3.59	26.8	3.83	30.1	4.32	33.4	4.85
		25	17.0	2.54	20.3	2.97	23.6	3.42	25.2	3.67	26.8	3.95	30.1	4.54	33.4	5.17
		27	17.0	2.58	20.3	3.07	23.6	3.61	25.2	3.90	26.8	4.20	30.1	4.83	33.4	5.51
		29	17.0	2.73	20.3	3.26	23.6	3.83	25.2	4.14	26.8	4.46	30.1	5.14	33.4	5.87
		31	17.0	2.88	20.3	3.45	23.6	4.06	25.2	4.39	26.8	4.74	30.1	5.46	33.4	6.24
		33	17.0	3.04	20.3	3.65	23.6	4.31	25.2	4.66	26.8	5.02	30.1	5.80	33.4	6.64
		35	17.0	3.21	20.3	3.85	23.6	4.56	25.2	4.94	26.8	5.33	30.1	6.16	33.4	7.05
		37	17.0	3.39	20.3	4.07	23.6	4.83	25.2	5.23	26.8	5.65	30.1	6.54	33.4	7.49
		39	17.0	3.57	20.3	4.30	23.6	5.11	25.2	5.54	26.8	5.98	30.1	6.93	33.4	7.95

4TW31482-1A

4 Capacity tables

4 - 2 Cooling capacity tables

REYQ20P9

TC: Total Capacity: kW ; PI: Power Input: kW (compressor + outdoor fan motor)

Combination (%)	Capacity index (kW)	Outdoor air temp. (°CDB)	Indoor air temperature: 14.0 °CWB 20.0 °CDB TC kW	14.0 °CWB 20.0 °CDB PI kW	16.0 °CWB 23.0 °CDB TC kW	16.0 °CWB 23.0 °CDB PI kW	18.0 °CWB 26.0 °CDB TC kW	18.0 °CWB 26.0 °CDB PI kW	19.0 °CWB 27.0 °CDB TC kW	19.0 °CWB 27.0 °CDB PI kW	20.0 °CWB 28.0 °CDB TC kW	20.0 °CWB 28.0 °CDB PI kW	22.0 °CWB 30.0 °CDB TC kW	22.0 °CWB 30.0 °CDB PI kW	24.0 °CWB 32.0 °CDB TC kW	24.0 °CWB 32.0 °CDB PI kW
130	650 (72.67)	10	49.0	6.86	58.5	8.40	67.9	9.99	70.4	9.99	71.3	9.99	73.1	9.99	74.8	9.99
		12	49.0	6.99	58.5	8.56	67.9	10.2	69.5	10.2	70.4	10.2	72.1	10.2	73.9	10.2
		14	49.0	7.12	58.5	8.72	67.7	10.3	68.6	10.3	69.5	10.3	71.2	10.3	73.0	10.3
		16	49.0	7.26	58.5	8.89	66.8	10.3	67.7	10.3	68.6	10.3	70.3	10.3	72.1	10.3
		18	49.0	7.40	58.5	9.07	65.9	10.7	66.8	10.7	67.7	10.8	69.4	10.9	71.2	11.0
		20	49.0	7.55	58.5	9.66	65.0	11.2	65.9	11.2	66.7	11.3	68.5	11.4	70.3	11.5
		21	49.0	7.76	58.5	10.0	64.5	11.4	65.4	11.5	66.3	11.5	68.1	11.7	69.8	11.8
		23	49.0	8.31	58.5	10.7	63.6	11.9	64.5	12.0	65.4	12.1	67.1	12.2	68.9	12.3
		25	49.0	8.88	58.5	11.5	62.7	12.5	63.6	12.5	64.5	12.6	66.2	12.7	68.0	12.9
		27	49.0	9.49	58.5	12.3	61.8	13.0	62.7	13.1	63.6	13.1	65.3	13.3	67.1	13.4
		29	49.0	10.1	58.5	13.1	60.9	13.5	61.8	13.6	62.7	13.7	64.4	13.8	66.2	14.0
		31	49.0	10.8	58.2	13.9	60.0	14.1	60.9	14.1	61.7	14.2	63.5	14.4	65.3	14.5
		33	49.0	11.5	57.3	14.4	59.1	14.6	59.9	14.7	60.8	14.7	62.6	14.9	64.4	15.1
		35	49.0	12.3	56.4	14.9	58.2	15.1	59.0	15.2	59.9	15.3	61.7	15.5	63.5	15.6
		37	49.0	13.1	55.5	15.5	57.2	15.7	58.1	15.7	59.0	15.8	60.8	16.0	62.6	16.2
		39	49.0	13.9	54.6	16.0	56.3	16.2	57.2	16.3	58.1	16.4	59.9	16.6	61.6	16.8
120	600 (67.08)	10	45.3	6.27	54.0	7.66	62.7	9.10	67.1	9.84	70.2	9.84	71.8	9.84	73.4	9.84
		12	45.3	6.38	54.0	7.80	62.7	9.28	67.1	10.0	69.3	10.0	70.9	10.0	72.5	10.0
		14	45.3	6.50	54.0	7.95	62.7	9.45	67.1	10.2	68.4	10.2	70.0	10.2	71.6	10.2
		16	45.3	6.63	54.0	8.10	62.7	9.64	66.6	10.3	67.4	10.3	69.1	10.3	70.7	10.3
		18	45.3	6.75	54.0	8.26	62.7	9.97	65.7	10.6	66.5	10.7	68.2	10.8	69.8	10.9
		20	45.3	6.89	54.0	8.59	62.7	10.7	64.8	11.2	65.6	11.2	67.3	11.3	68.9	11.4
		21	45.3	6.96	54.0	8.90	62.7	11.1	64.4	11.4	65.2	11.5	66.8	11.6	68.4	11.7
		23	45.3	7.43	54.0	9.53	62.6	11.9	63.4	11.9	64.3	12.0	65.9	12.1	67.5	12.2
		25	45.3	7.94	54.0	10.2	61.7	12.4	62.5	12.5	63.4	12.5	65.0	12.6	66.6	12.8
		27	45.3	8.47	54.0	10.9	60.8	12.9	61.6	13.0	62.4	13.0	64.1	13.2	65.7	13.3
		29	45.3	9.04	54.0	11.7	59.9	13.4	60.7	13.5	61.5	13.6	63.2	13.7	64.8	13.8
		31	45.3	9.63	54.0	12.4	59.0	14.0	59.8	14.0	60.6	14.1	62.3	14.3	63.9	14.4
		33	45.3	10.3	54.0	13.3	58.1	14.5	58.9	14.6	59.7	14.6	61.4	14.8	63.0	14.9
		35	45.3	10.9	54.0	14.1	57.2	15.0	58.0	15.1	58.8	15.2	60.4	15.3	62.1	15.5
		37	45.3	11.6	54.0	15.1	56.3	15.6	57.1	15.6	57.9	15.7	59.5	15.9	61.2	16.1
		39	45.3	12.4	53.7	15.9	55.4	16.1	56.2	16.2	57.0	16.3	58.6	16.4	60.3	16.6
110	550 (61.49)	10	41.5	5.69	49.5	6.93	57.5	8.23	61.5	8.90	65.5	9.57	70.6	9.80	72.1	9.80
		12	41.5	5.79	49.5	7.06	57.5	8.39	61.5	9.07	65.5	9.75	69.6	9.98	71.1	9.98
		14	41.5	5.90	49.5	7.19	57.5	8.55	61.5	9.24	65.5	9.94	68.7	10.2	70.2	10.2
		16	41.5	6.01	49.5	7.33	57.5	8.71	61.5	9.42	65.5	10.1	67.8	10.3	69.3	10.3
		18	41.5	6.12	49.5	7.48	57.5	8.89	61.5	9.68	65.4	10.6	66.9	10.7	68.4	10.8
		20	41.5	6.24	49.5	7.63	57.5	9.42	61.5	10.4	64.5	11.1	66.0	11.2	67.5	11.3
		21	41.5	6.30	49.5	7.86	57.5	9.75	61.5	10.8	64.1	11.4	65.6	11.5	67.1	11.6
		23	41.5	6.60	49.5	8.41	57.5	10.5	61.5	11.6	63.2	11.9	64.6	12.0	66.1	12.1
		25	41.5	7.05	49.5	9.00	57.5	11.2	61.5	12.4	62.2	12.4	63.7	12.5	65.2	12.7
		27	41.5	7.52	49.5	9.61	57.5	12.0	60.6	12.9	61.3	13.0	62.8	13.1	64.3	13.2
		29	41.5	8.01	49.5	10.3	57.5	12.8	59.7	13.4	60.4	13.5	61.9	13.6	63.4	13.7
		31	41.5	8.53	49.5	10.9	57.5	13.7	58.8	13.9	59.5	14.0	61.0	14.1	62.5	14.3
		33	41.5	9.08	49.5	11.7	57.1	14.4	57.9	14.5	58.6	14.5	60.1	14.7	61.6	14.8
		35	41.5	9.66	49.5	12.4	56.2	14.9	56.9	15.0	57.7	15.1	59.2	15.2	60.7	15.4
		37	41.5	10.3	49.5	13.2	55.3	15.5	56.0	15.5	56.8	15.6	58.3	15.8	59.8	15.9
		39	41.5	10.9	49.5	14.1	54.4	16.0	55.1	16.1	55.9	16.1	57.4	16.3	58.9	16.5
100	500 (55.90)	10	37.7	5.13	45.0	6.23	52.3	7.38	55.9	7.97	59.5	8.57	66.8	9.80	70.7	9.80
		12	37.7	5.22	45.0	6.34	52.3	7.51	55.9	8.12	59.5	8.73	66.8	9.98	69.8	9.98
		14	37.7	5.32	45.0	6.46	52.3	7.66	55.9	8.27	59.5	8.90	66.8	10.2	68.8	10.2
		16	37.7	5.41	45.0	6.58	52.3	7.81	55.9	8.44	59.5	9.07	66.6	10.3	67.9	10.3
		18	37.7	5.51	45.0	6.71	52.3	7.96	55.9	8.60	59.5	9.25	65.7	10.6	67.0	10.7
		20	37.7	5.62	45.0	6.84	52.3	8.20	55.9	9.04	59.5	9.91	64.8	11.2	66.1	11.2
		21	37.7	5.67	45.0	6.91	52.3	8.49	55.9	9.36	59.5	10.3	64.3	11.4	65.7	11.5
		23	37.7	5.82	45.0	7.37	52.3	9.10	55.9	10.0	59.5	11.0	63.4	11.9	64.8	12.0
		25	37.7	6.21	45.0	7.87	52.3	9.73	55.9	10.7	59.5	11.8	62.5	12.5	63.8	12.6
		27	37.7	6.62	45.0	8.40	52.3	10.4	55.9	11.5	59.5	12.6	61.6	13.0	62.9	13.1
		29	37.7	7.05	45.0	8.96	52.3	11.1	55.9	12.3	59.3	13.4	60.7	13.5	62.0	13.6
		31	37.7	7.50	45.0	9.55	52.3	11.9	55.9	13.1	58.4	13.9	59.8	14.0	61.1	14.2
		33	37.7	7.98	45.0	10.2	52.3	12.6	55.9	14.0	57.5	14.4	58.9	14.6	60.2	14.7
		35	37.7	8.48	45.0	10.8	52.3	13.5	55.9	14.9	56.6	15.0	57.9	15.1	59.3	15.2
		37	37.7	9.01	45.0	11.5	52.3	14.4	55.0	15.4	55.7	15.5	57.0	15.6	58.4	15.8
		39	37.7	9.57	45.0	12.3	52.3	15.3	54.1	16.0	54.8	16.0	56.1	16.2	57.5	16.3

4TW31482-1A

NOTES - ANMERKUNGEN - Σημειώσεις - NOTAS - REMARQUES - NOTE - OPMERKINGEN - примечания - NOTLAR

1 The above table shows the average value of conditions which may occur.
Die obige Tabelle zeigt den Durchschnittswert der Bedingungen, die auftreten können.
Στον παραπάνω πίνακα αναγράφεται η μέση τιμή για συνθήκες που μπορεί να προκύψουν.
La tabla de arriba muestra el valor medio de condiciones que pueden ocurrir.
Le tableau ci-dessus donne la valeur moyenne pour des conditions qui peuvent survenir.
La tabella in alto mostra il valore delle condizioni medie che si possono riscontrare.
De tabel hierboven geeft de gemiddelde waarde aan van situaties die kunnen voorvallen.
Таблица расположенная выше показывает среднее значение условий, которые могут наступить.
Yukarıdaki tablo meydana gelebilecek koşulların ortalama değerini göstermektedir.

4 Capacity tables

4 - 2 Cooling capacity tables

REYQ20P9

TC: Total Capacity: kW ; PI: Power Input: kW (compressor + outdoor fan motor)

Combination (%)	Capacity index (kW)	Outdoor air temp. (°CDB)	Indoor air temperature: 14.0 °CWB / 20.0 °CDB		16.0 °CWB / 23.0 °CDB		18.0 °CWB / 26.0 °CDB		19.0 °CWB / 27.0 °CDB		20.0 °CWB / 28.0 °CDB		22.0 °CWB / 30.0 °CDB		24.0 °CWB / 32.0 °CDB	
			TC	PI	TC	PI	TC	PI	TC	PI	TC	PI	TC	PI	TC	PI
			kW	kW	kW	kW	kW	kW	kW	kW	kW	kW	kW	kW	kW	kW
90	450 (50.31)	10	34.0	4.60	40.5	5.54	47.0	6.54	50.3	7.06	53.6	7.59	60.1	8.67	66.7	9.77
		12	34.0	4.67	40.5	5.64	47.0	6.66	50.3	7.19	53.6	7.73	60.1	8.83	66.7	9.96
		14	34.0	4.75	40.5	5.74	47.0	6.79	50.3	7.33	53.6	7.88	60.1	9.00	66.7	10.1
		16	34.0	4.84	40.5	5.85	47.0	6.92	50.3	7.47	53.6	8.03	60.1	9.18	66.6	10.3
		18	34.0	4.93	40.5	5.96	47.0	7.05	50.3	7.62	53.6	8.19	60.1	9.36	65.6	10.6
		20	34.0	5.02	40.5	6.08	47.0	7.19	50.3	7.77	53.6	8.50	60.1	10.1	64.7	11.2
		21	34.0	5.06	40.5	6.14	47.0	7.32	50.3	8.04	53.6	8.80	60.1	10.4	64.3	11.4
		23	34.0	5.16	40.5	6.39	47.0	7.83	50.3	8.61	53.6	9.43	60.1	11.2	63.4	11.9
		25	34.0	5.43	40.5	6.82	47.0	8.37	50.3	9.21	53.6	10.1	60.1	12.0	62.5	12.5
		27	34.0	5.79	40.5	7.27	47.0	8.94	50.3	9.84	53.6	10.8	60.1	12.8	61.6	13.0
		29	34.0	6.16	40.5	7.75	47.0	9.54	50.3	10.5	53.6	11.5	59.4	13.4	60.6	13.5
		31	34.0	6.54	40.5	8.25	47.0	10.2	50.3	11.2	53.6	12.3	58.5	13.9	59.7	14.0
		33	34.0	6.95	40.5	8.78	47.0	10.8	50.3	11.9	53.6	13.1	57.6	14.5	58.8	14.6
		35	34.0	7.38	40.5	9.34	47.0	11.5	50.3	12.7	53.6	14.0	56.7	15.0	57.9	15.1
		37	34.0	7.83	40.5	9.93	47.0	12.3	50.3	13.6	53.6	14.9	55.8	15.5	57.0	15.6
		39	34.0	8.31	40.5	10.6	47.0	13.1	50.3	14.4	53.6	15.9	54.9	16.0	56.1	16.2
80	400 (44.72)	10	30.2	4.08	36.0	4.89	41.8	5.74	44.7	6.18	47.6	6.64	53.4	7.57	59.3	8.53
		12	30.2	4.15	36.0	4.97	41.8	5.84	44.7	6.30	47.6	6.76	53.4	7.71	59.3	8.69
		14	30.2	4.21	36.0	5.06	41.8	5.95	44.7	6.41	47.6	6.89	53.4	7.86	59.3	8.85
		16	30.2	4.29	36.0	5.15	41.8	6.06	44.7	6.53	47.6	7.02	53.4	8.01	59.3	9.03
		18	30.2	4.36	36.0	5.24	41.8	6.18	44.7	6.66	47.6	7.15	53.4	8.17	59.3	9.21
		20	30.2	4.44	36.0	5.34	41.8	6.30	44.7	6.79	47.6	7.30	53.4	8.47	59.3	9.85
		21	30.2	4.48	36.0	5.39	41.8	6.36	44.7	6.86	47.6	7.45	53.4	8.77	59.3	10.2
		23	30.2	4.56	36.0	5.50	41.8	6.67	44.7	7.30	47.6	7.97	53.4	9.39	59.3	10.9
		25	30.2	4.71	36.0	5.85	41.8	7.12	44.7	7.80	47.6	8.52	53.4	10.1	59.3	11.7
		27	30.2	5.01	36.0	6.23	41.8	7.60	44.7	8.33	47.6	9.10	53.4	10.7	59.3	12.5
		29	30.2	5.32	36.0	6.63	41.8	8.10	44.7	8.88	47.6	9.71	53.4	11.5	59.3	13.4
		31	30.2	5.65	36.0	7.06	41.8	8.62	44.7	9.47	47.6	10.4	53.4	12.2	58.3	13.9
		33	30.2	6.00	36.0	7.50	41.8	9.18	44.7	10.1	47.6	11.0	53.4	13.1	57.4	14.4
		35	30.2	6.36	36.0	7.97	41.8	9.76	44.7	10.7	47.6	11.8	53.4	13.9	56.5	15.0
		37	30.2	6.74	36.0	8.46	41.8	10.4	44.7	11.4	47.6	12.5	53.4	14.8	55.6	15.5
		39	30.2	7.14	36.0	8.98	41.8	11.0	44.7	12.1	47.6	13.3	53.4	15.8	54.7	16.0
70	350 (39.13)	10	26.4	3.59	31.5	4.26	36.6	4.97	39.1	5.34	41.7	5.72	46.8	6.50	51.9	7.31
		12	26.4	3.64	31.5	4.33	36.6	5.06	39.1	5.43	41.7	5.82	46.8	6.62	51.9	7.45
		14	26.4	3.70	31.5	4.40	36.6	5.14	39.1	5.53	41.7	5.93	46.8	6.74	51.9	7.59
		16	26.4	3.76	31.5	4.48	36.6	5.24	39.1	5.63	41.7	6.04	46.8	6.87	51.9	7.73
		18	26.4	3.82	31.5	4.55	36.6	5.33	39.1	5.74	41.7	6.15	46.8	7.01	51.9	7.89
		20	26.4	3.88	31.5	4.64	36.6	5.43	39.1	5.85	41.7	6.27	46.8	7.15	51.9	8.11
		21	26.4	3.92	31.5	4.68	36.6	5.49	39.1	5.91	41.7	6.33	46.8	7.26	51.9	8.39
		23	26.4	3.99	31.5	4.77	36.6	5.60	39.1	6.11	41.7	6.64	46.8	7.77	51.9	8.99
		25	26.4	4.06	31.5	4.95	36.6	5.97	39.1	6.52	41.7	7.09	46.8	8.30	51.9	9.62
		27	26.4	4.29	31.5	5.27	36.6	6.36	39.1	6.95	41.7	7.56	46.8	8.87	51.9	10.3
		29	26.4	4.55	31.5	5.60	36.6	6.77	39.1	7.40	41.7	8.06	46.8	9.46	51.9	11.0
		31	26.4	4.83	31.5	5.95	36.6	7.21	39.1	7.88	41.7	8.58	46.8	10.1	51.9	11.7
		33	26.4	5.11	31.5	6.32	36.6	7.66	39.1	8.38	41.7	9.14	46.8	10.7	51.9	12.5
		35	26.4	5.42	31.5	6.71	36.6	8.14	39.1	8.91	41.7	9.72	46.8	11.4	51.9	13.3
		37	26.4	5.73	31.5	7.11	36.6	8.65	39.1	9.47	41.7	10.3	46.8	12.2	51.9	14.2
		39	26.4	6.07	31.5	7.54	36.6	9.18	39.1	10.1	41.7	11.0	46.8	13.0	51.9	15.1
60	300 (33.54)	10	22.6	3.12	27.0	3.66	31.4	4.24	33.5	4.54	35.7	4.85	40.1	5.48	44.4	6.14
		12	22.6	3.16	27.0	3.72	31.4	4.31	33.5	4.61	35.7	4.93	40.1	5.58	44.4	6.25
		14	22.6	3.21	27.0	3.78	31.4	4.38	33.5	4.69	35.7	5.02	40.1	5.68	44.4	6.37
		16	22.6	3.26	27.0	3.84	31.4	4.46	33.5	4.78	35.7	5.11	40.1	5.78	44.4	6.49
		18	22.6	3.31	27.0	3.90	31.4	4.53	33.5	4.86	35.7	5.20	40.1	5.89	44.4	6.61
		20	22.6	3.36	27.0	3.97	31.4	4.61	33.5	4.95	35.7	5.30	40.1	6.01	44.4	6.74
		21	22.6	3.39	27.0	4.00	31.4	4.66	33.5	5.00	35.7	5.35	40.1	6.07	44.4	6.81
		23	22.6	3.44	27.0	4.07	31.4	4.74	33.5	5.09	35.7	5.45	40.1	6.30	44.4	7.24
		25	22.6	3.50	27.0	4.15	31.4	4.93	33.5	5.35	35.7	5.79	40.1	6.73	44.4	7.74
		27	22.6	3.63	27.0	4.40	31.4	5.24	33.5	5.70	35.7	6.17	40.1	7.18	44.4	8.26
		29	22.6	3.84	27.0	4.67	31.4	5.57	33.5	6.06	35.7	6.57	40.1	7.65	44.4	8.81
		31	22.6	4.07	27.0	4.95	31.4	5.92	33.5	6.44	35.7	6.98	40.1	8.14	44.4	9.39
		33	22.6	4.31	27.0	5.25	31.4	6.29	33.5	6.84	35.7	7.42	40.1	8.66	44.4	10.00
		35	22.6	4.55	27.0	5.56	31.4	6.67	33.5	7.26	35.7	7.89	40.1	9.21	44.4	10.6
		37	22.6	4.81	27.0	5.88	31.4	7.07	33.5	7.71	35.7	8.37	40.1	9.79	44.4	11.3
		39	22.6	5.08	27.0	6.23	31.4	7.50	33.5	8.18	35.7	8.89	40.1	10.4	44.4	12.0
50	250 (27.95)	10	18.9	2.68	22.5	3.10	26.1	3.55	28.0	3.79	29.8	4.02	33.4	4.52	37.0	5.03
		12	18.9	2.72	22.5	3.15	26.1	3.61	28.0	3.84	29.8	4.09	33.4	4.60	37.0	5.12
		14	18.9	2.75	22.5	3.19	26.1	3.66	28.0	3.91	29.8	4.16	33.4	4.67	37.0	5.21
		16	18.9	2.79	22.5	3.24	26.1	3.72	28.0	3.97	29.8	4.23	33.4	4.76	37.0	5.31
		18	18.9	2.83	22.5	3.29	26.1	3.78	28.0	4.04	29.8	4.30	33.4	4.84	37.0	5.41
		20	18.9	2.87	22.5	3.34	26.1	3.84	28.0	4.11	29.8	4.37	33.4	4.93	37.0	5.51
		21	18.9	2.89	22.5	3.37	26.1	3.88	28.0	4.14	29.8	4.41	33.4	4.98	37.0	5.56
		23	18.9	2.93	22.5	3.42	26.1	3.94	28.0	4.22	29.8	4.49	33.4	5.07	37.0	5.69
		25	18.9	2.98	22.5	3.48	26.1	4.02	28.0	4.30	29.8	4.63	33.4	5.32	37.0	6.07
		27	18.9	3.03	22.5	3.60	26.1	4.24	28.0	4.57	29.8	4.93	33.4	5.67	37.0	6.47
		29	18.9	3.20	22.5	3.82	26.1	4.50	28.0	4.86	29.8	5.23	33.4	6.03	37.0	6.88
		31	18.9	3.38	22.5	4.04	26.1	4.77	28.0	5.15	29.8	5.56	33.4	6.41	37.0	7.32
		33	18.9	3.57	22.5	4.28	26.1	5.05	28.0	5.47	29.8	5.90	33.4	6.81	37.0	7.79
		35	18.9	3.77	22.5	4.52	26.1	5.35	28.0	5.79	29.8	6.25	33.4	7.23	37.0	8.27
		37	18.9	3.98	22.5	4.78	26.1	5.66	28.0	6.13	29.8	6.63	33.4	7.67	37.0	8.79
		39	18.9	4.19	22.5	5.05	26.1	5.99	28.0	6.49	29.8	7.02	33.4	8.13	37.0	9.33

4TW31482-1A

4 Capacity tables

4 - 2 Cooling capacity tables

REYQ22P8

TC: Total Capacity: kW ; PI: Power Input: kW (compressor + outdoor fan motor)

Combination (%)	Capacity index (kW)	Outdoor air temp. (°CDB)	Indoor air temperature: 14.0 °CWB 20.0 °CDB TC kW	14.0 °CWB 20.0 °CDB PI kW	16.0 °CWB 23.0 °CDB TC kW	16.0 °CWB 23.0 °CDB PI kW	18.0 °CWB 26.0 °CDB TC kW	18.0 °CWB 26.0 °CDB PI kW	19.0 °CWB 27.0 °CDB TC kW	19.0 °CWB 27.0 °CDB PI kW	20.0 °CWB 28.0 °CDB TC kW	20.0 °CWB 28.0 °CDB PI kW	22.0 °CWB 30.0 °CDB TC kW	22.0 °CWB 30.0 °CDB PI kW	24.0 °CWB 32.0 °CDB TC kW	24.0 °CWB 32.0 °CDB PI kW
130	715 (79.95)	10	54.0	7.83	64.4	9.58	74.8	11.4	77.5	11.4	78.4	11.4	80.4	11.4	82.3	11.4
		12	54.0	7.97	64.4	9.76	74.8	11.6	76.5	11.6	77.4	11.6	79.4	11.6	81.3	11.6
		14	54.0	8.12	64.4	9.95	74.5	11.8	75.5	11.8	76.4	11.8	78.4	11.8	80.3	11.8
		16	54.0	8.28	64.4	10.1	73.5	11.7	74.5	11.7	75.4	11.7	77.4	11.8	79.3	11.8
		18	54.0	8.44	64.4	10.3	72.5	12.2	73.5	12.2	74.4	12.3	76.4	12.4	78.3	12.5
		20	54.0	8.61	64.4	11.0	71.5	12.7	72.5	12.8	73.4	12.9	75.4	13.0	77.3	13.1
		21	54.0	8.85	64.4	11.4	71.0	13.0	72.0	13.1	72.9	13.2	74.9	13.3	76.8	13.4
		23	54.0	9.48	64.4	12.2	70.0	13.6	71.0	13.7	71.9	13.8	73.9	13.9	75.8	14.1
		25	54.0	10.1	64.4	13.1	69.0	14.2	70.0	14.3	70.9	14.4	72.9	14.5	74.8	14.7
		27	54.0	10.8	64.4	14.0	68.0	14.8	69.0	14.9	69.9	15.0	71.9	15.1	73.8	15.3
		29	54.0	11.6	64.4	15.0	67.0	15.4	68.0	15.5	68.9	15.6	70.9	15.8	72.8	15.9
		31	54.0	12.3	64.0	15.9	66.0	16.0	67.0	16.1	67.9	16.2	69.9	16.4	71.8	16.6
		33	54.0	13.1	63.0	16.5	65.0	16.6	66.0	16.7	66.9	16.8	68.9	17.0	70.8	17.2
		35	54.0	14.0	62.0	17.1	64.0	17.2	65.0	17.3	65.9	17.4	67.9	17.6	69.8	17.8
		37	54.0	14.9	61.0	17.7	63.0	17.9	64.0	18.0	64.9	18.1	66.9	18.3	68.8	18.5
		39	54.0	15.9	60.0	18.3	62.0	18.5	63.0	18.6	63.9	18.7	65.9	18.9	67.8	19.1
120	660 (73.80)	10	49.8	7.15	59.4	8.74	69.0	10.4	73.8	11.2	77.2	11.2	79.0	11.2	80.8	11.2
		12	49.8	7.28	59.4	8.90	69.0	10.6	73.8	11.4	76.2	11.4	78.0	11.4	79.8	11.4
		14	49.8	7.42	59.4	9.07	69.0	10.8	73.8	11.7	75.2	11.7	77.0	11.7	78.8	11.7
		16	49.8	7.56	59.4	9.25	69.0	11.0	73.3	11.7	74.2	11.7	76.0	11.8	77.8	11.8
		18	49.8	7.71	59.4	9.43	69.0	11.4	72.3	12.1	73.2	12.2	75.0	12.3	76.8	12.4
		20	49.8	7.86	59.4	9.80	69.0	12.2	71.3	12.7	72.2	12.8	74.0	12.9	75.8	13.0
		21	49.8	7.94	59.4	10.2	69.0	12.7	70.8	13.0	71.7	13.1	73.5	13.2	75.3	13.3
		23	49.8	8.47	59.4	10.9	68.9	13.6	69.8	13.6	70.7	13.7	72.5	13.8	74.3	13.9
		25	49.8	9.06	59.4	11.6	67.9	14.1	68.8	14.2	69.7	14.3	71.5	14.4	73.3	14.6
		27	49.8	9.67	59.4	12.4	66.9	14.7	67.8	14.8	68.7	14.9	70.5	15.0	72.3	15.2
		29	49.8	10.3	59.4	13.3	65.9	15.3	66.8	15.4	67.7	15.5	69.5	15.6	71.3	15.8
		31	49.8	11.0	59.4	14.2	64.9	15.9	65.8	16.0	66.7	16.1	68.5	16.3	70.3	16.4
		33	49.8	11.7	59.4	15.1	63.9	16.5	64.8	16.6	65.7	16.7	67.5	16.9	69.3	17.1
		35	49.8	12.5	59.4	16.1	62.9	17.1	63.8	17.2	64.7	17.3	66.5	17.5	68.3	17.7
		37	49.8	13.3	59.4	17.2	61.9	17.7	62.8	17.8	63.7	17.9	65.5	18.1	67.3	18.3
		39	49.8	14.1	59.1	18.2	60.9	18.4	61.8	18.5	62.7	18.6	64.5	18.8	66.3	19.0
110	605 (67.65)	10	45.7	6.50	54.5	7.91	63.3	9.39	67.7	10.2	72.0	10.9	77.6	11.2	79.3	11.2
		12	45.7	6.61	54.5	8.06	63.3	9.57	67.7	10.3	72.0	11.1	76.6	11.4	78.3	11.4
		14	45.7	6.73	54.5	8.21	63.3	9.75	67.7	10.5	72.0	11.3	75.6	11.6	77.3	11.6
		16	45.7	6.86	54.5	8.37	63.3	9.94	67.7	10.7	72.0	11.6	74.6	11.8	76.3	11.8
		18	45.7	6.99	54.5	8.53	63.3	10.1	67.7	11.0	72.0	12.1	73.6	12.2	75.3	12.3
		20	45.7	7.12	54.5	8.70	63.3	10.7	67.7	11.9	71.0	12.7	72.6	12.8	74.3	12.9
		21	45.7	7.19	54.5	8.97	63.3	11.1	67.7	12.3	70.5	13.0	72.1	13.1	73.8	13.2
		23	45.7	7.53	54.5	9.60	63.3	11.9	67.7	13.2	69.5	13.6	71.1	13.7	72.8	13.8
		25	45.7	8.04	54.5	10.3	63.3	12.8	67.7	14.1	68.5	14.2	70.1	14.3	71.8	14.4
		27	45.7	8.58	54.5	11.0	63.3	13.7	66.7	14.7	67.5	14.8	69.1	14.9	70.8	15.1
		29	45.7	9.14	54.5	11.7	63.3	14.6	65.7	15.3	66.5	15.4	68.1	15.5	69.8	15.7
		31	45.7	9.74	54.5	12.5	63.3	15.6	64.7	15.9	65.5	16.0	67.1	16.1	68.8	16.3
		33	45.7	10.4	54.5	13.3	62.8	16.4	63.7	16.5	64.5	16.6	66.1	16.7	67.8	16.9
		35	45.7	11.0	54.5	14.2	61.8	17.0	62.7	17.1	63.5	17.2	65.1	17.4	66.8	17.5
		37	45.7	11.7	54.5	15.1	60.8	17.6	61.7	17.7	62.5	17.8	64.1	18.0	65.8	18.2
		39	45.7	12.5	54.5	16.1	59.8	18.2	60.7	18.3	61.5	18.4	63.1	18.6	64.8	18.8
100	550 (61.50)	10	41.5	5.86	49.5	7.10	57.5	8.42	61.5	9.09	65.5	9.78	73.5	11.2	77.7	11.2
		12	41.5	5.96	49.5	7.23	57.5	8.57	61.5	9.26	65.5	9.96	73.5	11.4	76.7	11.4
		14	41.5	6.07	49.5	7.37	57.5	8.74	61.5	9.44	65.5	10.2	73.5	11.6	75.7	11.6
		16	41.5	6.18	49.5	7.51	57.5	8.91	61.5	9.62	65.5	10.4	73.2	11.8	74.7	11.8
		18	41.5	6.29	49.5	7.65	57.5	9.08	61.5	9.82	65.5	10.6	72.2	12.1	73.7	12.2
		20	41.5	6.41	49.5	7.80	57.5	9.36	61.5	10.3	65.5	11.3	71.2	12.7	72.7	12.8
		21	41.5	6.47	49.5	7.88	57.5	9.69	61.5	10.7	65.5	11.7	70.7	13.0	72.2	13.1
		23	41.5	6.64	49.5	8.40	57.5	10.4	61.5	11.4	65.5	12.6	69.7	13.6	71.2	13.7
		25	41.5	7.09	49.5	8.98	57.5	11.1	61.5	12.3	65.5	13.5	68.7	14.2	70.2	14.3
		27	41.5	7.56	49.5	9.59	57.5	11.9	61.5	13.1	65.5	14.4	67.7	14.8	69.2	14.9
		29	41.5	8.05	49.5	10.2	57.5	12.7	61.5	14.0	65.3	15.3	66.7	15.4	68.2	15.5
		31	41.5	8.56	49.5	10.9	57.5	13.5	61.5	14.9	64.3	15.9	65.7	16.0	67.2	16.1
		33	41.5	9.10	49.5	11.6	57.5	14.4	61.5	15.9	63.2	16.5	64.7	16.6	66.2	16.8
		35	41.5	9.68	49.5	12.4	57.5	15.4	61.5	17.0	62.2	17.1	63.7	17.2	65.2	17.4
		37	41.5	10.3	49.5	13.1	57.5	16.4	60.5	17.6	61.2	17.7	62.7	17.8	64.2	18.0
		39	41.5	10.9	49.5	14.0	57.5	17.4	59.5	18.2	60.2	18.3	61.7	18.5	63.2	18.6

4TW31482-1A

NOTES - ANMERKUNGEN - Σημειώσεις - NOTAS - REMARQUES - NOTE - OPMERKINGEN - примечания - NOTLAR

1 The above table shows the average value of conditions which may occur.
Die obige Tabelle zeigt den Durchschnittswert der Bedingungen, die auftreten können.
Στον παραπάνω πίνακα αναγράφεται η μέση τιμή για συνθήκες που μπορεί να προκύψουν.
La tabla de arriba muestra el valor medio de condiciones que pueden ocurrir.
Le tableau ci-dessus donne la valeur moyenne pour des conditions qui peuvent survenir.
La tabella in alto mostra il valore delle condizioni medie che si possono riscontrare.
De tabel hierboven geeft de gemiddelde waarde aan van situaties die kunnen voorvallen.
Таблица расположенная выше показывает среднее значение условий, которые могут наступить.
Yukarıdaki tablo meydana gelebilecek koşulların ortalama değerini göstermektedir.

4 Capacity tables

4 - 2 Cooling capacity tables

REYQ22P8

TC: Total Capacity: kW ; PI: Power Input: kW (compressor + outdoor fan motor)

Combination (%)	Capacity index (kW)	Outdoor air temp. (°CDB)	Indoor air temperature: 14.0 °CWB / 20.0 °CDB		16.0 °CWB / 23.0 °CDB		18.0 °CWB / 26.0 °CDB		19.0 °CWB / 27.0 °CDB		20.0 °CWB / 28.0 °CDB		22.0 °CWB / 30.0 °CDB		24.0 °CWB / 32.0 °CDB	
			TC	PI	TC	PI	TC	PI	TC	PI	TC	PI	TC	PI	TC	PI
			kW	kW	kW	kW	kW	kW	kW	kW	kW	kW	kW	kW	kW	kW
90	495	10	37.4	5.24	44.6	6.32	51.8	7.47	55.4	8.06	59.0	8.66	66.1	9.89	73.3	11.2
	(55.35)	12	37.4	5.33	44.6	6.44	51.8	7.60	55.4	8.21	59.0	8.82	66.1	10.1	73.3	11.4
		14	37.4	5.42	44.6	6.55	51.8	7.75	55.4	8.36	59.0	8.99	66.1	10.3	73.3	11.6
		16	37.4	5.52	44.6	6.67	51.8	7.89	55.4	8.52	59.0	9.16	66.1	10.5	73.2	11.8
		18	37.4	5.62	44.6	6.80	51.8	8.05	55.4	8.69	59.0	9.35	66.1	10.7	72.2	12.1
		20	37.4	5.72	44.6	6.93	51.8	8.21	55.4	8.87	59.0	9.70	66.1	11.5	71.2	12.7
		21	37.4	5.78	44.6	7.00	51.8	8.35	55.4	9.18	59.0	10.0	66.1	11.9	70.7	13.0
		23	37.4	5.89	44.6	7.29	51.8	8.94	55.4	9.83	59.0	10.8	66.1	12.8	69.7	13.6
		25	37.4	6.20	44.6	7.78	51.8	9.55	55.4	10.5	59.0	11.5	66.1	13.7	68.7	14.2
		27	37.4	6.60	44.6	8.30	51.8	10.2	55.4	11.2	59.0	12.3	66.1	14.6	67.7	14.8
		29	37.4	7.02	44.6	8.84	51.8	10.9	55.4	12.0	59.0	13.1	65.4	15.3	66.7	15.4
		31	37.4	7.47	44.6	9.42	51.8	11.6	55.4	12.8	59.0	14.0	64.4	15.9	65.7	16.0
		33	37.4	7.93	44.6	10.0	51.8	12.4	55.4	13.6	59.0	15.0	63.4	16.5	64.7	16.6
		35	37.4	8.42	44.6	10.7	51.8	13.2	55.4	14.5	59.0	15.9	62.4	17.1	63.7	17.2
		37	37.4	8.94	44.6	11.3	51.8	14.0	55.4	15.5	59.0	17.0	61.4	17.7	62.7	17.8
		39	37.4	9.48	44.6	12.0	51.8	14.9	55.4	16.5	59.0	18.1	60.4	18.3	61.7	18.4
80	440	10	33.2	4.65	39.6	5.57	46.0	6.55	49.2	7.06	52.4	7.57	58.8	8.63	65.2	9.73
	(49.20)	12	33.2	4.73	39.6	5.67	46.0	6.67	49.2	7.18	52.4	7.71	58.8	8.80	65.2	9.91
		14	33.2	4.81	39.6	5.77	46.0	6.79	49.2	7.32	52.4	7.86	58.8	8.96	65.2	10.1
		16	33.2	4.89	39.6	5.87	46.0	6.91	49.2	7.46	52.4	8.01	58.8	9.14	65.2	10.3
		18	33.2	4.97	39.6	5.98	46.0	7.05	49.2	7.60	52.4	8.16	58.8	9.32	65.2	10.5
		20	33.2	5.06	39.6	6.09	46.0	7.18	49.2	7.75	52.4	8.33	58.8	9.66	65.2	11.2
		21	33.2	5.11	39.6	6.15	46.0	7.25	49.2	7.83	52.4	8.50	58.8	10.0	65.2	11.6
		23	33.2	5.20	39.6	6.27	46.0	7.61	49.2	8.33	52.4	9.09	58.8	10.7	65.2	12.5
		25	33.2	5.37	39.6	6.67	46.0	8.12	49.2	8.90	52.4	9.72	58.8	11.5	65.2	13.4
		27	33.2	5.71	39.6	7.11	46.0	8.67	49.2	9.50	52.4	10.4	58.8	12.3	65.2	14.3
		29	33.2	6.07	39.6	7.57	46.0	9.24	49.2	10.1	52.4	11.1	58.8	13.1	65.2	15.3
		31	33.2	6.45	39.6	8.05	46.0	9.84	49.2	10.8	52.4	11.8	58.8	14.0	64.2	15.9
		33	33.2	6.84	39.6	8.56	46.0	10.5	49.2	11.5	52.4	12.6	58.8	14.9	63.2	16.5
		35	33.2	7.25	39.6	9.09	46.0	11.1	49.2	12.2	52.4	13.4	58.8	15.9	62.2	17.1
		37	33.2	7.69	39.6	9.65	46.0	11.8	49.2	13.0	52.4	14.3	58.8	16.9	61.2	17.7
		39	33.2	8.15	39.6	10.2	46.0	12.6	49.2	13.9	52.4	15.2	58.8	18.0	60.2	18.3
70	385	10	29.1	4.09	34.7	4.86	40.3	5.67	43.1	6.09	45.9	6.53	51.4	7.42	57.0	8.34
	(43.05)	12	29.1	4.16	34.7	4.94	40.3	5.77	43.1	6.20	45.9	6.64	51.4	7.55	57.0	8.50
		14	29.1	4.22	34.7	5.02	40.3	5.87	43.1	6.31	45.9	6.76	51.4	7.69	57.0	8.66
		16	29.1	4.29	34.7	5.11	40.3	5.98	43.1	6.43	45.9	6.89	51.4	7.84	57.0	8.82
		18	29.1	4.36	34.7	5.20	40.3	6.09	43.1	6.55	45.9	7.02	51.4	7.99	57.0	9.00
		20	29.1	4.43	34.7	5.29	40.3	6.20	43.1	6.67	45.9	7.16	51.4	8.15	57.0	9.25
		21	29.1	4.47	34.7	5.34	40.3	6.26	43.1	6.74	45.9	7.23	51.4	8.28	57.0	9.58
		23	29.1	4.55	34.7	5.44	40.3	6.39	43.1	6.97	45.9	7.57	51.4	8.86	57.0	10.3
		25	29.1	4.63	34.7	5.65	40.3	6.81	43.1	7.44	45.9	8.09	51.4	9.47	57.0	11.0
		27	29.1	4.89	34.7	6.02	40.3	7.26	43.1	7.93	45.9	8.63	51.4	10.1	57.0	11.7
		29	29.1	5.19	34.7	6.39	40.3	7.73	43.1	8.45	45.9	9.20	51.4	10.8	57.0	12.5
		31	29.1	5.51	34.7	6.79	40.3	8.22	43.1	8.99	45.9	9.79	51.4	11.5	57.0	13.4
		33	29.1	5.83	34.7	7.21	40.3	8.74	43.1	9.56	45.9	10.4	51.4	12.3	57.0	14.3
		35	29.1	6.18	34.7	7.65	40.3	9.29	43.1	10.2	45.9	11.1	51.4	13.1	57.0	15.2
		37	29.1	6.54	34.7	8.11	40.3	9.86	43.1	10.8	45.9	11.8	51.4	13.9	57.0	16.2
		39	29.1	6.92	34.7	8.60	40.3	10.5	43.1	11.5	45.9	12.5	51.4	14.8	57.0	17.2
60	330	10	24.9	3.56	29.7	4.18	34.5	4.84	36.9	5.18	39.3	5.53	44.1	6.25	48.9	7.01
	(36.90)	12	24.9	3.61	29.7	4.24	34.5	4.92	36.9	5.27	39.3	5.62	44.1	6.36	48.9	7.13
		14	24.9	3.66	29.7	4.31	34.5	5.00	36.9	5.36	39.3	5.72	44.1	6.48	48.9	7.27
		16	24.9	3.72	29.7	4.38	34.5	5.08	36.9	5.45	39.3	5.82	44.1	6.60	48.9	7.40
		18	24.9	3.78	29.7	4.45	34.5	5.17	36.9	5.55	39.3	5.93	44.1	6.72	48.9	7.55
		20	24.9	3.83	29.7	4.53	34.5	5.27	36.9	5.65	39.3	6.04	44.1	6.85	48.9	7.70
		21	24.9	3.86	29.7	4.57	34.5	5.31	36.9	5.70	39.3	6.10	44.1	6.92	48.9	7.77
		23	24.9	3.93	29.7	4.65	34.5	5.41	36.9	5.81	39.3	6.22	44.1	7.19	48.9	8.26
		25	24.9	3.99	29.7	4.73	34.5	5.62	36.9	6.11	39.3	6.61	44.1	7.68	48.9	8.83
		27	24.9	4.14	29.7	5.02	34.5	5.98	36.9	6.50	39.3	7.04	44.1	8.19	48.9	9.42
		29	24.9	4.39	29.7	5.32	34.5	6.36	36.9	6.91	39.3	7.49	44.1	8.72	48.9	10.1
		31	24.9	4.64	29.7	5.65	34.5	6.76	36.9	7.35	39.3	7.97	44.1	9.29	48.9	10.7
		33	24.9	4.91	29.7	5.99	34.5	7.17	36.9	7.81	39.3	8.47	44.1	9.88	48.9	11.4
		35	24.9	5.19	29.7	6.34	34.5	7.61	36.9	8.29	39.3	9.00	44.1	10.5	48.9	12.1
		37	24.9	5.49	29.7	6.71	34.5	8.07	36.9	8.79	39.3	9.55	44.1	11.2	48.9	12.9
		39	24.9	5.80	29.7	7.11	34.5	8.55	36.9	9.33	39.3	10.1	44.1	11.9	48.9	13.7
50	275	10	20.8	3.06	24.8	3.54	28.8	4.05	30.8	4.32	32.8	4.59	36.7	5.16	40.7	5.74
	(30.75)	12	20.8	3.10	24.8	3.59	28.8	4.11	30.8	4.39	32.8	4.67	36.7	5.24	40.7	5.84
		14	20.8	3.14	24.8	3.64	28.8	4.18	30.8	4.46	32.8	4.74	36.7	5.33	40.7	5.95
		16	20.8	3.18	24.8	3.70	28.8	4.25	30.8	4.53	32.8	4.82	36.7	5.43	40.7	6.05
		18	20.8	3.23	24.8	3.75	28.8	4.31	30.8	4.61	32.8	4.90	36.7	5.52	40.7	6.17
		20	20.8	3.27	24.8	3.81	28.8	4.39	30.8	4.69	32.8	4.99	36.7	5.62	40.7	6.28
		21	20.8	3.30	24.8	3.84	28.8	4.42	30.8	4.73	32.8	5.04	36.7	5.68	40.7	6.34
		23	20.8	3.35	24.8	3.91	28.8	4.50	30.8	4.81	32.8	5.13	36.7	5.78	40.7	6.49
		25	20.8	3.40	24.8	3.97	28.8	4.58	30.8	4.91	32.8	5.28	36.7	6.07	40.7	6.92
		27	20.8	3.45	24.8	4.11	28.8	4.84	30.8	5.22	32.8	5.62	36.7	6.47	40.7	7.38
		29	20.8	3.65	24.8	4.36	28.8	5.13	30.8	5.54	32.8	5.97	36.7	6.88	40.7	7.85
		31	20.8	3.86	24.8	4.61	28.8	5.44	30.8	5.88	32.8	6.34	36.7	7.31	40.7	8.36
		33	20.8	4.08	24.8	4.88	28.8	5.76	30.8	6.24	32.8	6.73	36.7	7.77	40.7	8.88
		35	20.8	4.30	24.8	5.16	28.8	6.10	30.8	6.61	32.8	7.13	36.7	8.24	40.7	9.44
		37	20.8	4.54	24.8	5.45	28.8	6.46	30.8	7.00	32.8	7.56	36.7	8.75	40.7	10.0
		39	20.8	4.78	24.8	5.76	28.8	6.84	30.8	7.41	32.8	8.01	36.7	9.28	40.7	10.6

4TW31482-1A

4 Capacity tables

4 - 2 Cooling capacity tables

REYQ24P8

TC: Total Capacity: kW ; PI: Power Input: kW (compressor + outdoor fan motor)

Combination (%)	Capacity index (kW)	Outdoor air temp. (°CDB)	Indoor air temperature: 14.0 °CWB 20.0 °CDB TC kW	14.0 °CWB 20.0 °CDB PI kW	16.0 °CWB 23.0 °CDB TC kW	16.0 °CWB 23.0 °CDB PI kW	18.0 °CWB 26.0 °CDB TC kW	18.0 °CWB 26.0 °CDB PI kW	19.0 °CWB 27.0 °CDB TC kW	19.0 °CWB 27.0 °CDB PI kW	20.0 °CWB 28.0 °CDB TC kW	20.0 °CWB 28.0 °CDB PI kW	22.0 °CWB 30.0 °CDB TC kW	22.0 °CWB 30.0 °CDB PI kW	24.0 °CWB 32.0 °CDB TC kW	24.0 °CWB 32.0 °CDB PI kW
130	780 (87.10)	10	58.8	8.84	70.1	10.8	81.4	12.9	84.4	12.9	85.4	12.9	87.6	12.9	89.7	12.9
		12	58.8	9.00	70.1	11.0	81.4	13.1	83.3	13.1	84.4	13.1	86.5	13.1	88.6	13.1
		14	58.8	9.17	70.1	11.2	81.1	13.3	82.2	13.3	83.3	13.3	85.4	13.3	87.5	13.3
		16	58.8	9.35	70.1	11.5	80.1	13.2	81.1	13.3	82.2	13.3	84.3	13.3	86.4	13.3
		18	58.8	9.53	70.1	11.7	79.0	13.7	80.0	13.8	81.1	13.9	83.2	14.0	85.3	14.1
		20	58.8	9.72	70.1	12.4	77.9	14.4	78.9	14.5	80.0	14.5	82.1	14.7	84.2	14.8
		21	58.8	10.00	70.1	12.9	77.3	14.7	78.4	14.8	79.5	14.9	81.6	15.0	83.7	15.2
		23	58.8	10.7	70.1	13.8	76.2	15.4	77.3	15.5	78.4	15.6	80.5	15.7	82.6	15.9
		25	58.8	11.4	70.1	14.8	75.2	16.1	76.2	16.2	77.3	16.2	79.4	16.4	81.5	16.6
		27	58.8	12.2	70.1	15.8	74.1	16.7	75.1	16.8	76.2	16.9	78.3	17.1	80.4	17.3
		29	58.8	13.0	70.1	16.9	73.0	17.4	74.0	17.5	75.1	17.6	77.2	17.8	79.3	18.0
		31	58.8	13.9	69.8	17.9	71.9	18.1	72.9	18.2	74.0	18.3	76.1	18.5	78.2	18.7
		33	58.8	14.8	68.7	18.6	70.8	18.8	71.9	18.9	72.9	19.0	75.0	19.2	77.2	19.4
		35	58.8	15.8	67.6	19.3	69.7	19.5	70.8	19.6	71.8	19.7	73.9	19.9	76.1	20.1
		37	58.8	16.8	66.5	19.9	68.6	20.2	69.7	20.3	70.7	20.4	72.9	20.6	75.0	20.9
		39	58.8	17.9	65.4	20.6	67.5	20.9	68.6	21.0	69.6	21.1	71.8	21.4	73.9	21.6
120	720 (80.40)	10	54.3	8.08	64.7	9.87	75.2	11.7	80.4	12.7	84.1	12.7	86.1	12.7	88.0	12.7
		12	54.3	8.23	64.7	10.1	75.2	12.0	80.4	12.9	83.0	12.9	85.0	12.9	86.9	12.9
		14	54.3	8.38	64.7	10.2	75.2	12.2	80.4	13.2	81.9	13.2	83.9	13.2	85.8	13.2
		16	54.3	8.54	64.7	10.4	75.2	12.4	79.9	13.3	80.8	13.3	82.8	13.3	84.8	13.3
		18	54.3	8.70	64.7	10.7	75.2	12.8	78.8	13.7	79.8	13.8	81.7	13.9	83.7	14.0
		20	54.3	8.87	64.7	11.1	75.2	13.8	77.7	14.4	78.7	14.4	80.6	14.6	82.6	14.7
		21	54.3	8.96	64.7	11.5	75.2	14.3	77.1	14.7	78.1	14.8	80.1	14.9	82.0	15.1
		23	54.3	9.57	64.7	12.3	75.1	15.3	76.0	15.4	77.0	15.5	79.0	15.6	80.9	15.7
		25	54.3	10.2	64.7	13.1	74.0	16.0	75.0	16.1	75.9	16.1	77.9	16.3	79.8	16.4
		27	54.3	10.9	64.7	14.1	72.9	16.7	73.9	16.7	74.8	16.8	76.8	17.0	78.8	17.1
		29	54.3	11.6	64.7	15.0	71.8	17.3	72.8	17.4	73.8	17.5	75.7	17.7	77.7	17.8
		31	54.3	12.4	64.7	16.0	70.7	18.0	71.7	18.1	72.7	18.2	74.6	18.4	76.6	18.5
		33	54.3	13.2	64.7	17.1	69.6	18.7	70.6	18.8	71.6	18.9	73.5	19.1	75.5	19.3
		35	54.3	14.1	64.7	18.2	68.5	19.4	69.5	19.5	70.5	19.6	72.4	19.8	74.4	20.0
		37	54.3	15.0	64.7	19.4	67.4	20.0	68.4	20.2	69.4	20.3	71.4	20.5	73.3	20.7
		39	54.3	15.9	64.4	20.5	66.4	20.7	67.3	20.8	68.3	21.0	70.3	21.2	72.2	21.4
110	660 (73.70)	10	49.7	7.34	59.3	8.93	68.9	10.6	73.7	11.5	78.5	12.3	84.6	12.6	86.4	12.6
		12	49.7	7.47	59.3	9.10	68.9	10.8	73.7	11.7	78.5	12.6	83.5	12.9	85.3	12.9
		14	49.7	7.60	59.3	9.27	68.9	11.0	73.7	11.9	78.5	12.8	82.4	13.1	84.2	13.1
		16	49.7	7.74	59.3	9.45	68.9	11.2	73.7	12.1	78.5	13.1	81.3	13.3	83.1	13.3
		18	49.7	7.89	59.3	9.63	68.9	11.5	73.7	12.5	78.4	13.7	80.2	13.8	82.0	13.9
		20	49.7	8.05	59.3	9.83	68.9	12.1	73.7	13.4	77.3	14.4	79.1	14.5	80.9	14.6
		21	49.7	8.12	59.3	10.1	68.9	12.6	73.7	13.9	76.8	14.7	78.6	14.8	80.4	14.9
		23	49.7	8.50	59.3	10.8	68.9	13.5	73.7	14.9	75.7	15.4	77.5	15.5	79.3	15.6
		25	49.7	9.08	59.3	11.6	68.9	14.4	73.7	16.0	74.6	16.0	76.4	16.2	78.2	16.3
		27	49.7	9.69	59.3	12.4	68.9	15.4	72.6	16.6	73.5	16.7	75.3	16.9	77.1	17.0
		29	49.7	10.3	59.3	13.2	68.9	16.5	71.5	17.3	72.4	17.4	74.2	17.5	76.0	17.7
		31	49.7	11.0	59.3	14.1	68.9	17.6	70.4	18.0	71.3	18.1	73.1	18.2	74.9	18.4
		33	49.7	11.7	59.3	15.0	68.4	18.6	69.3	18.7	70.2	18.7	72.0	18.9	73.8	19.1
		35	49.7	12.5	59.3	16.0	67.4	19.2	68.3	19.3	69.2	19.4	70.9	19.6	72.7	19.8
		37	49.7	13.2	59.3	17.1	66.3	19.9	67.2	20.0	68.1	20.1	69.9	20.3	71.6	20.5
		39	49.7	14.1	59.3	18.2	65.2	20.6	66.1	20.7	67.0	20.8	68.8	21.0	70.6	21.2
100	600 (67.00)	10	45.2	6.62	53.9	8.02	62.6	9.51	67.0	10.3	71.4	11.0	80.1	12.6	84.7	12.6
		12	45.2	6.73	53.9	8.17	62.6	9.68	67.0	10.5	71.4	11.3	80.1	12.9	83.6	12.9
		14	45.2	6.85	53.9	8.32	62.6	9.87	67.0	10.7	71.4	11.5	80.1	13.1	82.5	13.1
		16	45.2	6.98	53.9	8.48	62.6	10.1	67.0	10.9	71.4	11.7	79.8	13.3	81.4	13.3
		18	45.2	7.11	53.9	8.64	62.6	10.3	67.0	11.1	71.4	11.9	78.7	13.7	80.3	13.8
		20	45.2	7.24	53.9	8.81	62.6	10.6	67.0	11.6	71.4	12.8	77.6	14.4	79.3	14.5
		21	45.2	7.31	53.9	8.90	62.6	10.9	67.0	12.1	71.4	13.2	77.1	14.7	78.7	14.8
		23	45.2	7.50	53.9	9.49	62.6	11.7	67.0	12.9	71.4	14.2	76.0	15.4	77.6	15.5
		25	45.2	8.01	53.9	10.1	62.6	12.5	67.0	13.8	71.4	15.2	74.9	16.1	76.5	16.2
		27	45.2	8.53	53.9	10.8	62.6	13.4	67.0	14.8	71.4	16.3	73.8	16.7	75.4	16.9
		29	45.2	9.09	53.9	11.5	62.6	14.3	67.0	15.8	71.1	17.3	72.7	17.4	74.3	17.5
		31	45.2	9.67	53.9	12.3	62.6	15.3	67.0	16.9	70.0	17.9	71.6	18.1	73.3	18.2
		33	45.2	10.3	53.9	13.1	62.6	16.3	67.0	18.0	68.9	18.6	70.5	18.8	72.2	18.9
		35	45.2	10.9	53.9	14.0	62.6	17.4	67.0	19.2	67.8	19.3	69.4	19.5	71.1	19.6
		37	45.2	11.6	53.9	14.8	62.6	18.5	65.9	19.9	66.7	20.0	68.4	20.1	70.0	20.3
		39	45.2	12.3	53.9	15.8	62.6	19.7	64.8	20.6	65.6	20.7	67.3	20.8	68.9	21.0

4TW31482-1A

NOTES - ANMERKUNGEN - Σημειώσεις - NOTAS - REMARQUES - NOTE - OPMERKINGEN - примечания - NOTLAR

1 The above table shows the average value of conditions which may occur.
Die obige Tabelle zeigt den Durchschnittswert der Bedingungen, die auftreten können.
Στον παραπάνω πίνακα αναγράφεται η μέση τιμή για συνθήκες που μπορεί να προκύψουν.
La tabla de arriba muestra el valor medio de condiciones que pueden ocurrir.
Le tableau ci-dessus donne la valeur moyenne pour des conditions qui peuvent survenir.
La tabella in alto mostra il valore delle condizioni medie che si possono riscontrare.
De tabel hierboven geeft de gemiddelde waarde aan van situaties die kunnen voorvallen.
Таблица расположенная выше показывает среднее значение условий, которые могут наступить.
Yukarıdaki tablo meydana gelebilecek koşulların ortalama değerini göstermektedir.

4 Capacity tables

4 - 2 Cooling capacity tables

REYQ24P8

TC: Total Capacity: kW ; PI: Power Input: kW (compressor + outdoor fan motor)

Combination (%)	Capacity index (kW)	Outdoor air temp. (°CDB)	Indoor air temperature: 14.0 °CWB / 20.0 °CDB		16.0 °CWB / 23.0 °CDB		18.0 °CWB / 26.0 °CDB		19.0 °CWB / 27.0 °CDB		20.0 °CWB / 28.0 °CDB		22.0 °CWB / 30.0 °CDB		24.0 °CWB / 32.0 °CDB	
			TC	PI	TC	PI	TC	PI	TC	PI	TC	PI	TC	PI	TC	PI
			kW	kW	kW	kW	kW	kW	kW	kW	kW	kW	kW	kW	kW	kW
90	540 (60.30)	10	40.7	5.92	48.5	7.14	56.4	8.43	60.3	9.10	64.2	9.78	72.1	11.2	79.9	12.6
		12	40.7	6.02	48.5	7.27	56.4	8.59	60.3	9.27	64.2	9.96	72.1	11.4	79.9	12.8
		14	40.7	6.13	48.5	7.40	56.4	8.75	60.3	9.44	64.2	10.2	72.1	11.6	79.9	13.1
		16	40.7	6.23	48.5	7.54	56.4	8.92	60.3	9.63	64.2	10.4	72.1	11.8	79.8	13.3
		18	40.7	6.35	48.5	7.68	56.4	9.09	60.3	9.82	64.2	10.6	72.1	12.1	78.7	13.7
		20	40.7	6.46	48.5	7.83	56.4	9.27	60.3	10.0	64.2	11.0	72.1	13.0	77.6	14.4
		21	40.7	6.52	48.5	7.91	56.4	9.43	60.3	10.4	64.2	11.3	72.1	13.4	77.0	14.7
		23	40.7	6.65	48.5	8.23	56.4	10.1	60.3	11.1	64.2	12.2	72.1	14.4	76.0	15.4
		25	40.7	7.00	48.5	8.79	56.4	10.8	60.3	11.9	64.2	13.0	72.1	15.4	74.9	16.0
		27	40.7	7.46	48.5	9.37	56.4	11.5	60.3	12.7	64.2	13.9	72.1	16.5	73.8	16.7
		29	40.7	7.93	48.5	9.99	56.4	12.3	60.3	13.5	64.2	14.8	71.2	17.3	72.7	17.4
		31	40.7	8.43	48.5	10.6	56.4	13.1	60.3	14.4	64.2	15.8	70.1	17.9	71.6	18.1
		33	40.7	8.96	48.5	11.3	56.4	14.0	60.3	15.4	64.2	16.9	69.0	18.6	70.5	18.8
		35	40.7	9.51	48.5	12.0	56.4	14.9	60.3	16.4	64.2	18.0	67.9	19.3	69.4	19.5
		37	40.7	10.1	48.5	12.8	56.4	15.8	60.3	17.5	64.2	19.2	66.9	20.0	68.3	20.1
		39	40.7	10.7	48.5	13.6	56.4	16.8	60.3	18.6	64.2	20.5	65.8	20.7	67.2	20.8
80	480 (53.60)	10	36.2	5.26	43.1	6.29	50.1	7.40	53.6	7.97	57.1	8.55	64.1	9.75	71.0	11.0
		12	36.2	5.34	43.1	6.40	50.1	7.53	53.6	8.11	57.1	8.71	64.1	9.93	71.0	11.2
		14	36.2	5.43	43.1	6.52	50.1	7.67	53.6	8.26	57.1	8.87	64.1	10.1	71.0	11.4
		16	36.2	5.52	43.1	6.63	50.1	7.81	53.6	8.42	57.1	9.04	64.1	10.3	71.0	11.6
		18	36.2	5.62	43.1	6.75	50.1	7.96	53.6	8.58	57.1	9.22	64.1	10.5	71.0	11.9
		20	36.2	5.72	43.1	6.88	50.1	8.11	53.6	8.75	57.1	9.40	64.1	10.9	71.0	12.7
		21	36.2	5.77	43.1	6.95	50.1	8.19	53.6	8.84	57.1	9.59	64.1	11.3	71.0	13.1
		23	36.2	5.87	43.1	7.08	50.1	8.59	53.6	9.41	57.1	10.3	64.1	12.1	71.0	14.1
		25	36.2	6.07	43.1	7.54	50.1	9.17	53.6	10.1	57.1	11.0	64.1	13.0	71.0	15.1
		27	36.2	6.45	43.1	8.03	50.1	9.79	53.6	10.7	57.1	11.7	64.1	13.8	71.0	16.1
		29	36.2	6.86	43.1	8.55	50.1	10.4	53.6	11.4	57.1	12.5	64.1	14.8	71.0	17.3
		31	36.2	7.28	43.1	9.09	50.1	11.1	53.6	12.2	57.1	13.3	64.1	15.8	69.9	17.9
		33	36.2	7.73	43.1	9.66	50.1	11.8	53.6	13.0	57.1	14.2	64.1	16.8	68.8	18.6
		35	36.2	8.19	43.1	10.3	50.1	12.6	53.6	13.8	57.1	15.1	64.1	17.9	67.8	19.3
		37	36.2	8.68	43.1	10.9	50.1	13.4	53.6	14.7	57.1	16.1	64.1	19.1	66.7	20.0
		39	36.2	9.20	43.1	11.6	50.1	14.2	53.6	15.7	57.1	17.2	64.1	20.4	65.6	20.6
70	420 (46.90)	10	31.7	4.62	37.8	5.49	43.9	6.40	46.9	6.88	50.0	7.37	56.0	8.38	62.1	9.42
		12	31.7	4.69	37.8	5.58	43.9	6.51	46.9	7.00	50.0	7.50	56.0	8.53	62.1	9.60
		14	31.7	4.77	37.8	5.67	43.9	6.63	46.9	7.13	50.0	7.64	56.0	8.69	62.1	9.78
		16	31.7	4.84	37.8	5.77	43.9	6.75	46.9	7.26	50.0	7.78	56.0	8.86	62.1	9.97
		18	31.7	4.92	37.8	5.87	43.9	6.87	46.9	7.40	50.0	7.93	56.0	9.03	62.1	10.2
		20	31.7	5.00	37.8	5.97	43.9	7.00	46.9	7.54	50.0	8.08	56.0	9.21	62.1	10.4
		21	31.7	5.05	37.8	6.03	43.9	7.07	46.9	7.61	50.0	8.16	56.0	9.35	62.1	10.8
		23	31.7	5.14	37.8	6.14	43.9	7.21	46.9	7.87	50.0	8.55	56.0	10.0	62.1	11.6
		25	31.7	5.23	37.8	6.38	43.9	7.70	46.9	8.40	50.0	9.13	56.0	10.7	62.1	12.4
		27	31.7	5.53	37.8	6.79	43.9	8.20	46.9	8.95	50.0	9.74	56.0	11.4	62.1	13.2
		29	31.7	5.86	37.8	7.22	43.9	8.73	46.9	9.54	50.0	10.4	56.0	12.2	62.1	14.1
		31	31.7	6.22	37.8	7.67	43.9	9.29	46.9	10.2	50.0	11.1	56.0	13.0	62.1	15.1
		33	31.7	6.59	37.8	8.14	43.9	9.87	46.9	10.8	50.0	11.8	56.0	13.8	62.1	16.1
		35	31.7	6.98	37.8	8.64	43.9	10.5	46.9	11.5	50.0	12.5	56.0	14.7	62.1	17.2
		37	31.7	7.39	37.8	9.16	43.9	11.1	46.9	12.2	50.0	13.3	56.0	15.7	62.1	18.3
		39	31.7	7.82	37.8	9.71	43.9	11.8	46.9	13.0	50.0	14.2	56.0	16.7	62.1	19.5
60	360 (40.20)	10	27.1	4.02	32.4	4.72	37.6	5.46	40.2	5.85	42.8	6.24	48.0	7.06	53.3	7.91
		12	27.1	4.08	32.4	4.79	37.6	5.55	40.2	5.95	42.8	6.35	48.0	7.19	53.3	8.06
		14	27.1	4.14	32.4	4.87	37.6	5.64	40.2	6.05	42.8	6.46	48.0	7.32	53.3	8.21
		16	27.1	4.20	32.4	4.95	37.6	5.74	40.2	6.15	42.8	6.58	48.0	7.45	53.3	8.36
		18	27.1	4.26	32.4	5.03	37.6	5.84	40.2	6.27	42.8	6.70	48.0	7.59	53.3	8.52
		20	27.1	4.33	32.4	5.11	37.6	5.95	40.2	6.38	42.8	6.82	48.0	7.74	53.3	8.69
		21	27.1	4.37	32.4	5.16	37.6	6.00	40.2	6.44	42.8	6.89	48.0	7.82	53.3	8.78
		23	27.1	4.44	32.4	5.25	37.6	6.11	40.2	6.56	42.8	7.02	48.0	8.12	53.3	9.33
		25	27.1	4.51	32.4	5.34	37.6	6.35	40.2	6.90	42.8	7.46	48.0	8.67	53.3	9.97
		27	27.1	4.67	32.4	5.67	37.6	6.76	40.2	7.34	42.8	7.95	48.0	9.25	53.3	10.6
		29	27.1	4.95	32.4	6.01	37.6	7.18	40.2	7.81	42.8	8.46	48.0	9.85	53.3	11.4
		31	27.1	5.24	32.4	6.38	37.6	7.63	40.2	8.30	42.8	9.00	48.0	10.5	53.3	12.1
		33	27.1	5.55	32.4	6.76	37.6	8.10	40.2	8.82	42.8	9.57	48.0	11.2	53.3	12.9
		35	27.1	5.87	32.4	7.16	37.6	8.59	40.2	9.36	42.8	10.2	48.0	11.9	53.3	13.7
		37	27.1	6.20	32.4	7.58	37.6	9.11	40.2	9.93	42.8	10.8	48.0	12.6	53.3	14.6
		39	27.1	6.55	32.4	8.03	37.6	9.66	40.2	10.5	42.8	11.5	48.0	13.4	53.3	15.5
50	300 (33.50)	10	22.6	3.46	27.0	4.00	31.3	4.58	33.5	4.88	35.7	5.19	40.0	5.82	44.4	6.49
		12	22.6	3.50	27.0	4.06	31.3	4.65	33.5	4.95	35.7	5.27	40.0	5.92	44.4	6.60
		14	22.6	3.55	27.0	4.12	31.3	4.72	33.5	5.03	35.7	5.36	40.0	6.02	44.4	6.72
		16	22.6	3.60	27.0	4.18	31.3	4.79	33.5	5.12	35.7	5.45	40.0	6.13	44.4	6.84
		18	22.6	3.65	27.0	4.24	31.3	4.87	33.5	5.20	35.7	5.54	40.0	6.24	44.4	6.96
		20	22.6	3.70	27.0	4.31	31.3	4.95	33.5	5.29	35.7	5.64	40.0	6.35	44.4	7.10
		21	22.6	3.72	27.0	4.34	31.3	5.00	33.5	5.34	35.7	5.69	40.0	6.41	44.4	7.16
		23	22.6	3.78	27.0	4.41	31.3	5.08	33.5	5.43	35.7	5.79	40.0	6.53	44.4	7.33
		25	22.6	3.84	27.0	4.49	31.3	5.17	33.5	5.55	35.7	5.97	40.0	6.86	44.4	7.82
		27	22.6	3.90	27.0	4.64	31.3	5.46	33.5	5.90	35.7	6.35	40.0	7.30	44.4	8.33
		29	22.6	4.12	27.0	4.92	31.3	5.79	33.5	6.26	35.7	6.74	40.0	7.77	44.4	8.87
		31	22.6	4.36	27.0	5.21	31.3	6.14	33.5	6.64	35.7	7.16	40.0	8.26	44.4	9.44
		33	22.6	4.60	27.0	5.51	31.3	6.51	33.5	7.04	35.7	7.60	40.0	8.77	44.4	10.0
		35	22.6	4.86	27.0	5.83	31.3	6.89	33.5	7.46	35.7	8.05	40.0	9.31	44.4	10.7
		37	22.6	5.12	27.0	6.16	31.3	7.30	33.5	7.90	35.7	8.54	40.0	9.88	44.4	11.3
		39	22.6	5.40	27.0	6.51	31.3	7.72	33.5	8.37	35.7	9.05	40.0	10.5	44.4	12.0

4TW31482-1A

4 Capacity tables

4 - 2 Cooling capacity tables

REYQ26P8

TC: Total Capacity: kW ; PI: Power Input: kW (compressor + outdoor fan motor)

Combination (%)	Capacity index (kW)	Outdoor air temp. (°CDB)	Indoor air temperature: 14.0 °CWB 20.0 °CDB TC kW	14.0 °CWB 20.0 °CDB PI kW	16.0 °CWB 23.0 °CDB TC kW	16.0 °CWB 23.0 °CDB PI kW	18.0 °CWB 26.0 °CDB TC kW	18.0 °CWB 26.0 °CDB PI kW	19.0 °CWB 27.0 °CDB TC kW	19.0 °CWB 27.0 °CDB PI kW	20.0 °CWB 28.0 °CDB TC kW	20.0 °CWB 28.0 °CDB PI kW	22.0 °CWB 30.0 °CDB TC kW	22.0 °CWB 30.0 °CDB PI kW	24.0 °CWB 32.0 °CDB TC kW	24.0 °CWB 32.0 °CDB PI kW
130	845 (94.90)	10	64.0	9.95	76.4	12.2	88.7	14.5	91.9	14.5	93.1	14.5	95.4	14.5	97.7	14.5
		12	64.0	10.1	76.4	12.4	88.7	14.8	90.8	14.8	91.9	14.8	94.2	14.8	96.5	14.8
		14	64.0	10.3	76.4	12.6	88.4	14.9	89.6	14.9	90.7	14.9	93.0	14.9	95.3	14.9
		16	64.0	10.5	76.4	12.9	87.2	14.9	88.4	14.9	89.5	14.9	91.8	14.9	94.2	15.0
		18	64.0	10.7	76.4	13.1	86.0	15.4	87.2	15.5	88.3	15.6	90.7	15.7	93.0	15.9
		20	64.0	10.9	76.4	14.0	84.9	16.2	86.0	16.3	87.2	16.4	89.5	16.5	91.8	16.7
		21	64.0	11.2	76.4	14.5	84.3	16.6	85.4	16.7	86.6	16.7	88.9	16.9	91.2	17.1
		23	64.0	12.0	76.4	15.6	83.1	17.3	84.2	17.4	85.4	17.5	87.7	17.7	90.0	17.9
		25	64.0	12.9	76.4	16.7	81.9	18.1	83.0	18.2	84.2	18.3	86.5	18.5	88.8	18.6
		27	64.0	13.8	76.4	17.8	80.7	18.8	81.8	18.9	83.0	19.0	85.3	19.2	87.6	19.4
		29	64.0	14.7	76.4	19.0	79.5	19.6	80.7	19.7	81.8	19.8	84.1	20.0	86.4	20.2
		31	64.0	15.7	76.0	20.2	78.3	20.4	79.5	20.5	80.6	20.6	82.9	20.8	85.2	21.0
		33	64.0	16.7	74.8	20.9	77.1	21.1	78.3	21.3	79.4	21.4	81.8	21.6	84.1	21.8
		35	64.0	17.8	73.6	21.7	75.9	21.9	77.1	22.0	78.3	22.2	80.6	22.4	82.9	22.7
		37	64.0	18.9	72.4	22.4	74.8	22.7	75.9	22.8	77.1	23.0	79.4	23.2	81.7	23.5
		39	64.0	20.2	71.3	23.2	73.6	23.5	74.7	23.6	75.9	23.8	78.2	24.0	80.5	24.3
120	780 (87.60)	10	59.1	9.09	70.5	11.1	81.9	13.2	87.6	14.3	91.6	14.3	93.8	14.3	95.9	14.3
		12	59.1	9.25	70.5	11.3	81.9	13.4	87.6	14.5	90.5	14.5	92.6	14.5	94.7	14.5
		14	59.1	9.43	70.5	11.5	81.9	13.7	87.6	14.8	89.3	14.8	91.4	14.8	93.5	14.8
		16	59.1	9.60	70.5	11.7	81.9	14.0	87.0	14.9	88.1	14.9	90.2	14.9	92.3	15.0
		18	59.1	9.79	70.5	12.0	81.9	14.5	85.8	15.4	86.9	15.5	89.0	15.6	91.2	15.8
		20	59.1	9.98	70.5	12.5	81.9	15.5	84.6	16.2	85.7	16.3	87.8	16.4	90.0	16.5
		21	59.1	10.1	70.5	12.9	81.9	16.1	84.0	16.6	85.1	16.6	87.2	16.8	89.4	16.9
		23	59.1	10.8	70.5	13.8	81.8	17.2	82.9	17.3	83.9	17.4	86.1	17.6	88.2	17.7
		25	59.1	11.5	70.5	14.8	80.6	18.0	81.7	18.1	82.7	18.1	84.9	18.3	87.0	18.5
		27	59.1	12.3	70.5	15.8	79.4	18.7	80.5	18.8	81.5	18.9	83.7	19.1	85.8	19.3
		29	59.1	13.1	70.5	16.9	78.2	19.5	79.3	19.6	80.4	19.7	82.5	19.9	84.6	20.1
		31	59.1	14.0	70.5	18.0	77.0	20.2	78.1	20.4	79.2	20.5	81.3	20.7	83.4	20.9
		33	59.1	14.9	70.5	19.2	75.9	21.0	76.9	21.1	78.0	21.2	80.1	21.4	82.2	21.7
		35	59.1	15.8	70.5	20.5	74.7	21.8	75.7	21.9	76.8	22.0	78.9	22.2	81.1	22.5
		37	59.1	16.9	70.5	21.8	73.5	22.6	74.5	22.7	75.6	22.8	77.7	23.0	79.9	23.3
		39	59.1	17.9	70.2	23.1	72.3	23.3	73.4	23.5	74.4	23.6	76.6	23.8	78.7	24.1
110	715 (80.30)	10	54.2	8.25	64.6	10.1	75.1	11.9	80.3	12.9	85.5	13.9	92.1	14.2	94.1	14.2
		12	54.2	8.40	64.6	10.2	75.1	12.2	80.3	13.1	85.5	14.1	91.0	14.5	92.9	14.5
		14	54.2	8.55	64.6	10.4	75.1	12.4	80.3	13.4	85.5	14.4	89.8	14.7	91.7	14.7
		16	54.2	8.71	64.6	10.6	75.1	12.6	80.3	13.7	85.5	14.7	88.6	14.9	90.5	15.0
		18	54.2	8.88	64.6	10.8	75.1	12.9	80.3	14.0	85.4	15.4	87.4	15.5	89.3	15.7
		20	54.2	9.05	64.6	11.1	75.1	13.6	80.3	15.1	84.3	16.1	86.2	16.3	88.2	16.4
		21	54.2	9.14	64.6	11.4	75.1	14.1	80.3	15.6	83.7	16.5	85.6	16.7	87.6	16.8
		23	54.2	9.57	64.6	12.2	75.1	15.2	80.3	16.8	82.5	17.3	84.4	17.4	86.4	17.6
		25	54.2	10.2	64.6	13.0	75.1	16.2	80.3	18.0	81.3	18.0	83.2	18.2	85.2	18.3
		27	54.2	10.9	64.6	13.9	75.1	17.4	79.1	18.7	80.1	18.8	82.0	19.0	84.0	19.1
		29	54.2	11.6	64.6	14.9	75.1	18.5	77.9	19.5	78.9	19.6	80.9	19.7	82.8	19.9
		31	54.2	12.4	64.6	15.9	75.1	19.8	76.7	20.2	77.7	20.3	79.7	20.5	81.6	20.7
		33	54.2	13.2	64.6	16.9	74.6	20.9	75.6	21.0	76.5	21.1	78.5	21.3	80.4	21.5
		35	54.2	14.0	64.6	18.0	73.4	21.6	74.4	21.7	75.3	21.9	77.3	22.1	79.3	22.3
		37	54.2	14.9	64.6	19.2	72.2	22.4	73.2	22.5	74.2	22.6	76.1	22.8	78.1	23.1
		39	54.2	15.8	64.6	20.4	71.0	23.2	72.0	23.3	73.0	23.4	74.9	23.6	76.9	23.9
100	650 (73.00)	10	49.3	7.44	58.8	9.03	68.3	10.7	73.0	11.6	77.7	12.4	87.2	14.2	92.3	14.2
		12	49.3	7.57	58.8	9.19	68.3	10.9	73.0	11.8	77.7	12.7	87.2	14.5	91.1	14.5
		14	49.3	7.71	58.8	9.36	68.3	11.1	73.0	12.0	77.7	12.9	87.2	14.7	89.9	14.7
		16	49.3	7.85	58.8	9.54	68.3	11.3	73.0	12.2	77.7	13.2	86.9	14.9	88.7	15.0
		18	49.3	7.99	58.8	9.72	68.3	11.5	73.0	12.5	77.7	13.4	85.8	15.4	87.5	15.5
		20	49.3	8.15	58.8	9.91	68.3	11.9	73.0	13.1	77.7	14.4	84.6	16.2	86.3	16.3
		21	49.3	8.22	58.8	10.0	68.3	12.3	73.0	13.6	77.7	14.9	84.0	16.5	85.8	16.7
		23	49.3	8.44	58.8	10.7	68.3	13.2	73.0	14.5	77.7	16.0	82.8	17.3	84.6	17.4
		25	49.3	9.01	58.8	11.4	68.3	14.1	73.0	15.6	77.7	17.1	81.6	18.1	83.4	18.2
		27	49.3	9.60	58.8	12.2	68.3	15.1	73.0	16.6	77.7	18.3	80.4	18.8	82.2	19.0
		29	49.3	10.2	58.8	13.0	68.3	16.1	73.0	17.8	77.5	19.4	79.2	19.6	81.0	19.7
		31	49.3	10.9	58.8	13.8	68.3	17.2	73.0	19.0	76.3	20.2	78.0	20.3	79.8	20.5
		33	49.3	11.6	58.8	14.7	68.3	18.3	73.0	20.3	75.1	20.9	76.9	21.1	78.6	21.3
		35	49.3	12.3	58.8	15.7	68.3	19.5	73.0	21.6	73.9	21.7	75.7	21.9	77.4	22.1
		37	49.3	13.1	58.8	16.7	68.3	20.8	71.8	22.4	72.7	22.5	74.5	22.7	76.3	22.9
		39	49.3	13.9	58.8	17.8	68.3	22.2	70.6	23.1	71.5	23.2	73.3	23.4	75.1	23.7

4TW31482-1A

NOTES - ANMERKUNGEN - Σημειώσεις - NOTAS - REMARQUES - NOTE - OPMERKINGEN - примечания - NOTLAR

1 The above table shows the average value of conditions which may occur.
Die obige Tabelle zeigt den Durchschnittswert der Bedingungen, die auftreten können.
Στον παραπάνω πίνακα αναγράφεται η μέση τιμή για συνθήκες που μπορεί να προκύψουν.
La tabla de arriba muestra el valor medio de condiciones que pueden ocurrir.
Le tableau ci-dessus donne la valeur moyenne pour des conditions qui peuvent survenir.
La tabella in alto mostra il valore delle condizioni medie che si possono riscontrare.
De tabel hierboven geeft de gemiddelde waarde aan van situaties die kunnen voorvallen.
Таблица расположенная выше показывает среднее значение условий, которые могут наступить.
Yukarıdaki tablo meydana gelebilecek koşulların ortalama değerini göstermektedir.

4 Capacity tables

4 - 2 Cooling capacity tables

REYQ26P8

TC: Total Capacity: kW ; PI: Power Input: kW (compressor + outdoor fan motor)

Combination (%)	Capacity index (kW)	Outdoor air temp. (°CDB)	Indoor air temperature: 14.0 °CWB 20.0 °CDB TC kW	14.0 °CWB 20.0 °CDB PI kW	16.0 °CWB 23.0 °CDB TC kW	16.0 °CWB 23.0 °CDB PI kW	18.0 °CWB 26.0 °CDB TC kW	18.0 °CWB 26.0 °CDB PI kW	19.0 °CWB 27.0 °CDB TC kW	19.0 °CWB 27.0 °CDB PI kW	20.0 °CWB 28.0 °CDB TC kW	20.0 °CWB 28.0 °CDB PI kW	22.0 °CWB 30.0 °CDB TC kW	22.0 °CWB 30.0 °CDB PI kW	24.0 °CWB 32.0 °CDB TC kW	24.0 °CWB 32.0 °CDB PI kW
90	585	10	44.3	6.66	52.9	8.03	61.4	9.49	65.7	10.2	70.0	11.0	78.5	12.6	87.1	14.2
	(65.70)	12	44.3	6.78	52.9	8.18	61.4	9.66	65.7	10.4	70.0	11.2	78.5	12.8	87.1	14.4
		14	44.3	6.89	52.9	8.33	61.4	9.84	65.7	10.6	70.0	11.4	78.5	13.1	87.1	14.7
		16	44.3	7.01	52.9	8.48	61.4	10.0	65.7	10.8	70.0	11.6	78.5	13.3	86.9	15.0
		18	44.3	7.14	52.9	8.64	61.4	10.2	65.7	11.0	70.0	11.9	78.5	13.6	85.7	15.4
		20	44.3	7.27	52.9	8.81	61.4	10.4	65.7	11.3	70.0	12.3	78.5	14.6	84.5	16.2
		21	44.3	7.34	52.9	8.89	61.4	10.6	65.7	11.7	70.0	12.8	78.5	15.1	83.9	16.5
		23	44.3	7.48	52.9	9.26	61.4	11.4	65.7	12.5	70.0	13.7	78.5	16.2	82.8	17.3
		25	44.3	7.88	52.9	9.89	61.4	12.1	65.7	13.4	70.0	14.6	78.5	17.4	81.6	18.1
		27	44.3	8.39	52.9	10.5	61.4	13.0	65.7	14.3	70.0	15.6	78.5	18.6	80.4	18.8
		29	44.3	8.92	52.9	11.2	61.4	13.8	65.7	15.2	70.0	16.7	77.6	19.4	79.2	19.6
		31	44.3	9.48	52.9	12.0	61.4	14.7	65.7	16.2	70.0	17.8	76.4	20.2	78.0	20.3
		33	44.3	10.1	52.9	12.7	61.4	15.7	65.7	17.3	70.0	19.0	75.2	20.9	76.8	21.1
		35	44.3	10.7	52.9	13.5	61.4	16.7	65.7	18.5	70.0	20.3	74.0	21.7	75.6	21.9
		37	44.3	11.4	52.9	14.4	61.4	17.8	65.7	19.7	70.0	21.6	72.8	22.5	74.4	22.7
		39	44.3	12.0	52.9	15.3	61.4	19.0	65.7	20.9	70.0	23.0	71.7	23.2	73.3	23.4
80	520	10	39.4	5.91	47.0	7.08	54.6	8.32	58.4	8.96	62.2	9.62	69.8	11.0	77.4	12.4
	(58.40)	12	39.4	6.01	47.0	7.20	54.6	8.47	58.4	9.13	62.2	9.80	69.8	11.2	77.4	12.6
		14	39.4	6.11	47.0	7.33	54.6	8.63	58.4	9.30	62.2	9.98	69.8	11.4	77.4	12.8
		16	39.4	6.21	47.0	7.46	54.6	8.79	58.4	9.47	62.2	10.2	69.8	11.6	77.4	13.1
		18	39.4	6.32	47.0	7.60	54.6	8.95	58.4	9.66	62.2	10.4	69.8	11.8	77.4	13.3
		20	39.4	6.43	47.0	7.74	54.6	9.13	58.4	9.85	62.2	10.6	69.8	12.3	77.4	14.3
		21	39.4	6.49	47.0	7.81	54.6	9.22	58.4	9.94	62.2	10.8	69.8	12.7	77.4	14.8
		23	39.4	6.61	47.0	7.97	54.6	9.67	58.4	10.6	62.2	11.6	69.8	13.6	77.4	15.9
		25	39.4	6.82	47.0	8.48	54.6	10.3	58.4	11.3	62.2	12.4	69.8	14.6	77.4	17.0
		27	39.4	7.26	47.0	9.03	54.6	11.0	58.4	12.1	62.2	13.2	69.8	15.6	77.4	18.2
		29	39.4	7.71	47.0	9.62	54.6	11.7	58.4	12.9	62.2	14.1	69.8	16.6	77.4	19.4
		31	39.4	8.19	47.0	10.2	54.6	12.5	58.4	13.7	62.2	15.0	69.8	17.8	76.2	20.2
		33	39.4	8.69	47.0	10.9	54.6	13.3	58.4	14.6	62.2	16.0	69.8	18.9	75.0	20.9
		35	39.4	9.22	47.0	11.5	54.6	14.2	58.4	15.6	62.2	17.0	69.8	20.2	73.8	21.7
		37	39.4	9.77	47.0	12.3	54.6	15.1	58.4	16.6	62.2	18.1	69.8	21.5	72.6	22.5
		39	39.4	10.4	47.0	13.0	54.6	16.0	58.4	17.6	62.2	19.3	69.8	22.9	71.4	23.2
70	455	10	34.5	5.20	41.1	6.17	47.8	7.20	51.1	7.74	54.4	8.29	61.1	9.42	67.7	10.6
	(51.10)	12	34.5	5.28	41.1	6.27	47.8	7.33	51.1	7.88	54.4	8.44	61.1	9.60	67.7	10.8
		14	34.5	5.36	41.1	6.38	47.8	7.46	51.1	8.02	54.4	8.59	61.1	9.78	67.7	11.0
		16	34.5	5.45	41.1	6.49	47.8	7.59	51.1	8.17	54.4	8.75	61.1	9.96	67.7	11.2
		18	34.5	5.54	41.1	6.60	47.8	7.73	51.1	8.32	54.4	8.92	61.1	10.2	67.7	11.4
		20	34.5	5.63	41.1	6.72	47.8	7.88	51.1	8.48	54.4	9.09	61.1	10.4	67.7	11.8
		21	34.5	5.68	41.1	6.78	47.8	7.95	51.1	8.56	54.4	9.18	61.1	10.5	67.7	12.2
		23	34.5	5.78	41.1	6.91	47.8	8.12	51.1	8.85	54.4	9.62	61.1	11.3	67.7	13.0
		25	34.5	5.88	41.1	7.18	47.8	8.66	51.1	9.45	54.4	10.3	61.1	12.0	67.7	13.9
		27	34.5	6.22	41.1	7.64	47.8	9.22	51.1	10.1	54.4	11.0	61.1	12.9	67.7	14.9
		29	34.5	6.60	41.1	8.13	47.8	9.82	51.1	10.7	54.4	11.7	61.1	13.7	67.7	15.9
		31	34.5	7.00	41.1	8.63	47.8	10.4	51.1	11.4	54.4	12.4	61.1	14.6	67.7	17.0
		33	34.5	7.41	41.1	9.16	47.8	11.1	51.1	12.2	54.4	13.2	61.1	15.6	67.7	18.1
		35	34.5	7.85	41.1	9.72	47.8	11.8	51.1	12.9	54.4	14.1	61.1	16.6	67.7	19.3
		37	34.5	8.31	41.1	10.3	47.8	12.5	51.1	13.7	54.4	15.0	61.1	17.7	67.7	20.6
		39	34.5	8.79	41.1	10.9	47.8	13.3	51.1	14.6	54.4	15.9	61.1	18.8	67.7	21.9
60	390	10	29.6	4.52	35.3	5.31	41.0	6.14	43.8	6.58	46.6	7.02	52.3	7.95	58.0	8.90
	(43.80)	12	29.6	4.59	35.3	5.39	41.0	6.25	43.8	6.69	46.6	7.15	52.3	8.09	58.0	9.06
		14	29.6	4.65	35.3	5.48	41.0	6.35	43.8	6.80	46.6	7.27	52.3	8.23	58.0	9.23
		16	29.6	4.72	35.3	5.56	41.0	6.46	43.8	6.92	46.6	7.40	52.3	8.39	58.0	9.41
		18	29.6	4.80	35.3	5.66	41.0	6.57	43.8	7.05	46.6	7.54	52.3	8.54	58.0	9.59
		20	29.6	4.87	35.3	5.75	41.0	6.69	43.8	7.18	46.6	7.68	52.3	8.71	58.0	9.78
		21	29.6	4.91	35.3	5.80	41.0	6.75	43.8	7.24	46.6	7.75	52.3	8.79	58.0	9.87
		23	29.6	4.99	35.3	5.90	41.0	6.88	43.8	7.38	46.6	7.90	52.3	9.14	58.0	10.5
		25	29.6	5.07	35.3	6.01	41.0	7.14	43.8	7.76	46.6	8.40	52.3	9.75	58.0	11.2
		27	29.6	5.26	35.3	6.37	41.0	7.60	43.8	8.26	46.6	8.95	52.3	10.4	58.0	12.0
		29	29.6	5.57	35.3	6.77	41.0	8.08	43.8	8.79	46.6	9.52	52.3	11.1	58.0	12.8
		31	29.6	5.90	35.3	7.18	41.0	8.58	43.8	9.34	46.6	10.1	52.3	11.8	58.0	13.6
		33	29.6	6.24	35.3	7.61	41.0	9.11	43.8	9.92	46.6	10.8	52.3	12.6	58.0	14.5
		35	29.6	6.60	35.3	8.06	41.0	9.67	43.8	10.5	46.6	11.4	52.3	13.4	58.0	15.4
		37	29.6	6.97	35.3	8.53	41.0	10.3	43.8	11.2	46.6	12.1	52.3	14.2	58.0	16.4
		39	29.6	7.37	35.3	9.03	41.0	10.9	43.8	11.9	46.6	12.9	52.3	15.1	58.0	17.5
50	325	10	24.6	3.89	29.4	4.50	34.1	5.15	36.5	5.49	38.9	5.83	43.6	6.55	48.4	7.30
	(36.50)	12	24.6	3.94	29.4	4.56	34.1	5.23	36.5	5.57	38.9	5.93	43.6	6.66	48.4	7.43
		14	24.6	3.99	29.4	4.63	34.1	5.31	36.5	5.66	38.9	6.03	43.6	6.78	48.4	7.56
		16	24.6	4.04	29.4	4.70	34.1	5.39	36.5	5.76	38.9	6.13	43.6	6.89	48.4	7.69
		18	24.6	4.10	29.4	4.77	34.1	5.48	36.5	5.85	38.9	6.23	43.6	7.02	48.4	7.84
		20	24.6	4.16	29.4	4.85	34.1	5.57	36.5	5.95	38.9	6.34	43.6	7.15	48.4	7.98
		21	24.6	4.19	29.4	4.88	34.1	5.62	36.5	6.01	38.9	6.40	43.6	7.21	48.4	8.06
		23	24.6	4.25	29.4	4.96	34.1	5.72	36.5	6.11	38.9	6.52	43.6	7.35	48.4	8.24
		25	24.6	4.32	29.4	5.05	34.1	5.82	36.5	6.24	38.9	6.71	43.6	7.72	48.4	8.80
		27	24.6	4.39	29.4	5.23	34.1	6.14	36.5	6.63	38.9	7.14	43.6	8.22	48.4	9.37
		29	24.6	4.64	29.4	5.54	34.1	6.52	36.5	7.04	38.9	7.59	43.6	8.74	48.4	9.98
		31	24.6	4.90	29.4	5.86	34.1	6.91	36.5	7.47	38.9	8.05	43.6	9.29	48.4	10.6
		33	24.6	5.18	29.4	6.20	34.1	7.32	36.5	7.92	38.9	8.55	43.6	9.87	48.4	11.3
		35	24.6	5.46	29.4	6.56	34.1	7.76	36.5	8.40	38.9	9.06	43.6	10.5	48.4	12.0
		37	24.6	5.76	29.4	6.93	34.1	8.21	36.5	8.89	38.9	9.60	43.6	11.1	48.4	12.7
		39	24.6	6.08	29.4	7.32	34.1	8.69	36.5	9.42	38.9	10.2	43.6	11.8	48.4	13.5

4TW31482-1A

4 Capacity tables

4 - 2 Cooling capacity tables

REYQ28P8

TC: Total Capacity: kW ; PI: Power Input: kW (compressor + outdoor fan motor)

Combination (%)	Capacity index (kW)	Outdoor air temp. (°CDB)	Indoor air temperature: 14.0 °CWB 20.0 °CDB TC kW	14.0 °CWB 20.0 °CDB PI kW	16.0 °CWB 23.0 °CDB TC kW	16.0 °CWB 23.0 °CDB PI kW	18.0 °CWB 26.0 °CDB TC kW	18.0 °CWB 26.0 °CDB PI kW	19.0 °CWB 27.0 °CDB TC kW	19.0 °CWB 27.0 °CDB PI kW	20.0 °CWB 28.0 °CDB TC kW	20.0 °CWB 28.0 °CDB PI kW	22.0 °CWB 30.0 °CDB TC kW	22.0 °CWB 30.0 °CDB PI kW	24.0 °CWB 32.0 °CDB TC kW	24.0 °CWB 32.0 °CDB PI kW
130	910 (102.05)	10	68.9	11.0	82.1	13.4	95.4	16.0	98.9	16.0	100	16.0	103	16.0	105	16.0
		12	68.9	11.2	82.1	13.7	95.4	16.3	97.6	16.3	98.8	16.3	101	16.3	104	16.3
		14	68.9	11.4	82.1	13.9	95.1	16.5	96.3	16.5	97.6	16.5	100	16.5	103	16.5
		16	68.9	11.6	82.1	14.2	93.8	16.4	95.0	16.4	96.3	16.4	98.8	16.5	101	16.5
		18	68.9	11.8	82.1	14.5	92.5	17.0	93.8	17.1	95.0	17.2	97.5	17.3	100.0	17.5
		20	68.9	12.1	82.1	15.4	91.2	17.8	92.5	17.9	93.7	18.0	96.2	18.2	98.7	18.4
		21	68.9	12.4	82.1	16.0	90.6	18.3	91.8	18.3	93.1	18.4	95.6	18.6	98.1	18.8
		23	68.9	13.3	82.1	17.1	89.3	19.1	90.6	19.2	91.8	19.3	94.3	19.5	96.8	19.7
		25	68.9	14.2	82.1	18.3	88.1	19.9	89.3	20.0	90.5	20.1	93.0	20.3	95.5	20.5
		27	68.9	15.2	82.1	19.6	86.8	20.8	88.0	20.9	89.3	21.0	91.7	21.2	94.2	21.4
		29	68.9	16.2	82.1	21.0	85.5	21.6	86.7	21.7	88.0	21.8	90.5	22.1	92.9	22.3
		31	68.9	17.3	81.7	22.2	84.2	22.4	85.5	22.6	86.7	22.7	89.2	22.9	91.7	23.2
		33	68.9	18.4	80.5	23.0	82.9	23.3	84.2	23.4	85.4	23.6	87.9	23.8	90.4	24.1
		35	68.9	19.6	79.2	23.9	81.7	24.1	82.9	24.3	84.1	24.4	86.6	24.7	89.1	25.0
		37	68.9	20.9	77.9	24.7	80.4	25.0	81.6	25.2	82.9	25.3	85.4	25.6	87.8	25.9
		39	68.9	22.2	76.6	25.6	79.1	25.9	80.4	26.0	81.6	26.2	84.1	26.5	86.6	26.8
120	840 (94.20)	10	63.6	10.0	75.8	12.2	88.1	14.5	94.2	15.7	98.5	15.7	101	15.7	103	15.7
		12	63.6	10.2	75.8	12.5	88.1	14.8	94.2	16.0	97.3	16.0	99.6	16.0	102	16.0
		14	63.6	10.4	75.8	12.7	88.1	15.1	94.2	16.3	96.0	16.3	98.3	16.3	101	16.3
		16	63.6	10.6	75.8	12.9	88.1	15.4	93.6	16.4	94.7	16.4	97.0	16.5	99.3	16.5
		18	63.6	10.8	75.8	13.2	88.1	15.9	92.3	17.0	93.4	17.1	95.7	17.2	98.0	17.4
		20	63.6	11.0	75.8	13.7	88.1	17.1	91.0	17.8	92.2	17.9	94.5	18.1	96.7	18.2
		21	63.6	11.1	75.8	14.2	88.1	17.7	90.4	18.2	91.5	18.3	93.8	18.5	96.1	18.7
		23	63.6	11.9	75.8	15.2	88.0	19.0	89.1	19.1	90.2	19.2	92.5	19.3	94.8	19.5
		25	63.6	12.7	75.8	16.3	86.7	19.8	87.8	19.9	89.0	20.0	91.3	20.2	93.6	20.4
		27	63.6	13.5	75.8	17.4	85.4	20.6	86.5	20.7	87.7	20.8	90.0	21.0	92.3	21.2
		29	63.6	14.4	75.8	18.6	84.1	21.5	85.3	21.6	86.4	21.7	88.7	21.9	91.0	22.1
		31	63.6	15.4	75.8	19.9	82.8	22.3	84.0	22.4	85.1	22.5	87.4	22.8	89.7	23.0
		33	63.6	16.4	75.8	21.2	81.6	23.2	82.7	23.3	83.9	23.4	86.2	23.6	88.4	23.9
		35	63.6	17.4	75.8	22.6	80.3	24.0	81.4	24.1	82.6	24.3	84.9	24.5	87.2	24.8
		37	63.6	18.6	75.8	24.1	79.0	24.8	80.2	25.0	81.3	25.1	83.6	25.4	85.9	25.6
		39	63.6	19.8	75.4	25.4	77.7	25.7	78.9	25.8	80.0	26.0	82.3	26.3	84.6	26.5
110	770 (86.35)	10	58.3	9.09	69.5	11.1	80.7	13.2	86.4	14.2	92.0	15.3	99.1	15.6	101	15.6
		12	58.3	9.26	69.5	11.3	80.7	13.4	86.4	14.5	92.0	15.6	97.8	15.9	99.9	15.9
		14	58.3	9.42	69.5	11.5	80.7	13.7	86.4	14.8	92.0	15.9	96.5	16.2	98.6	16.2
		16	58.3	9.60	69.5	11.7	80.7	13.9	86.4	15.0	92.0	16.2	95.3	16.5	97.4	16.5
		18	58.3	9.78	69.5	11.9	80.7	14.2	86.4	15.5	91.9	17.0	94.0	17.1	96.1	17.3
		20	58.3	9.97	69.5	12.2	80.7	15.0	86.4	16.6	90.6	17.8	92.7	17.9	94.8	18.1
		21	58.3	10.1	69.5	12.6	80.7	15.6	86.4	17.2	90.0	18.2	92.1	18.4	94.2	18.5
		23	58.3	10.5	69.5	13.4	80.7	16.7	86.4	18.5	88.7	19.0	90.8	19.2	92.9	19.4
		25	58.3	11.3	69.5	14.4	80.7	17.9	86.4	19.8	87.4	19.9	89.5	20.0	91.6	20.2
		27	58.3	12.0	69.5	15.4	80.7	19.1	85.1	20.6	86.1	20.7	88.2	20.9	90.3	21.1
		29	58.3	12.8	69.5	16.4	80.7	20.4	83.8	21.4	84.9	21.5	87.0	21.7	89.1	21.9
		31	58.3	13.6	69.5	17.5	80.7	21.8	82.5	22.3	83.6	22.4	85.7	22.6	87.8	22.8
		33	58.3	14.5	69.5	18.6	80.2	23.0	81.2	23.1	82.3	23.2	84.4	23.4	86.5	23.7
		35	58.3	15.4	69.5	19.9	78.9	23.8	80.0	24.0	81.0	24.1	83.1	24.3	85.2	24.5
		37	58.3	16.4	69.5	21.1	77.6	24.7	78.7	24.8	79.7	24.9	81.8	25.2	83.9	25.4
		39	58.3	17.4	69.5	22.5	76.4	25.5	77.4	25.7	78.5	25.8	80.6	26.0	82.7	26.3
100	700 (78.50)	10	53.0	8.20	63.2	9.95	73.4	11.8	78.5	12.7	83.6	13.7	93.8	15.6	99.2	15.6
		12	53.0	8.34	63.2	10.1	73.4	12.0	78.5	13.0	83.6	14.0	93.8	15.9	98.0	15.9
		14	53.0	8.49	63.2	10.3	73.4	12.2	78.5	13.2	83.6	14.2	93.8	16.2	96.7	16.2
		16	53.0	8.65	63.2	10.5	73.4	12.5	78.5	13.5	83.6	14.5	93.5	16.5	95.4	16.5
		18	53.0	8.81	63.2	10.7	73.4	12.7	78.5	13.7	83.6	14.8	92.2	17.0	94.1	17.1
		20	53.0	8.98	63.2	10.9	73.4	13.1	78.5	14.4	83.6	15.8	90.9	17.8	92.9	18.0
		21	53.0	9.06	63.2	11.0	73.4	13.6	78.5	15.0	83.6	16.4	90.3	18.2	92.2	18.4
		23	53.0	9.30	63.2	11.8	73.4	14.5	78.5	16.0	83.6	17.6	89.0	19.1	90.9	19.2
		25	53.0	9.92	63.2	12.6	73.4	15.5	78.5	17.2	83.6	18.8	87.8	19.9	89.7	20.1
		27	53.0	10.6	63.2	13.4	73.4	16.6	78.5	18.3	83.6	20.2	86.5	20.7	88.4	20.9
		29	53.0	11.3	63.2	14.3	73.4	17.7	78.5	19.6	83.3	21.4	85.2	21.6	87.1	21.8
		31	53.0	12.0	63.2	15.3	73.4	18.9	78.5	20.9	82.0	22.2	83.9	22.4	85.8	22.6
		33	53.0	12.7	63.2	16.2	73.4	20.2	78.5	22.3	80.7	23.1	82.6	23.3	84.6	23.5
		35	53.0	13.5	63.2	17.3	73.4	21.5	78.5	23.8	79.5	23.9	81.4	24.1	83.3	24.3
		37	53.0	14.4	63.2	18.4	73.4	22.9	77.2	24.6	78.2	24.8	80.1	25.0	82.0	25.2
		39	53.0	15.3	63.2	19.6	73.4	24.4	75.9	25.5	76.9	25.6	78.8	25.8	80.7	26.1

4TW31482-1A

NOTES - ANMERKUNGEN - Σημειώσεις - NOTAS - REMARQUES - NOTE - OPMERKINGEN - примечания - NOTLAR

1 The above table shows the average value of conditions which may occur.
Die obige Tabelle zeigt den Durchschnittswert der Bedingungen, die auftreten können.
Στον παραπάνω πίνακα αναγράφεται η μέση τιμή για συνθήκες που μπορεί να προκύψουν.
La tabla de arriba muestra el valor medio de condiciones que pueden ocurrir.
Le tableau ci-dessus donne la valeur moyenne pour des conditions qui peuvent survenir.
La tabella in alto mostra il valore delle condizioni medie che si possono riscontrare.
De tabel hierboven geeft de gemiddelde waarde aan van situaties die kunnen voorvallen.
Таблица расположенная выше показывает среднее значение условий, которые могут наступить.
Yukarıdaki tablo meydana gelebilecek koşulların ortalama değerini göstermektedir.

4 Capacity tables

4 - 2 Cooling capacity tables

REYQ28P8

TC: Total Capacity: kW ; PI: Power Input: kW (compressor + outdoor fan motor)

Combination (%)	Capacity index (kW)	Outdoor air temp. (°CDB)	Indoor air temperature: 14.0 °CWB / 20.0 °CDB TC kW	14.0 °CWB / 20.0 °CDB PI kW	16.0 °CWB / 23.0 °CDB TC kW	16.0 °CWB / 23.0 °CDB PI kW	18.0 °CWB / 26.0 °CDB TC kW	18.0 °CWB / 26.0 °CDB PI kW	19.0 °CWB / 27.0 °CDB TC kW	19.0 °CWB / 27.0 °CDB PI kW	20.0 °CWB / 28.0 °CDB TC kW	20.0 °CWB / 28.0 °CDB PI kW	22.0 °CWB / 30.0 °CDB TC kW	22.0 °CWB / 30.0 °CDB PI kW	24.0 °CWB / 32.0 °CDB TC kW	24.0 °CWB / 32.0 °CDB PI kW
90	630 (70.65)	10	47.7	7.34	56.9	8.85	66.1	10.5	70.7	11.3	75.2	12.1	84.4	13.8	93.6	15.6
		12	47.7	7.47	56.9	9.01	66.1	10.6	70.7	11.5	75.2	12.4	84.4	14.1	93.6	15.9
		14	47.7	7.59	56.9	9.17	66.1	10.8	70.7	11.7	75.2	12.6	84.4	14.4	93.6	16.2
		16	47.7	7.73	56.9	9.34	66.1	11.1	70.7	11.9	75.2	12.8	84.4	14.7	93.5	16.5
		18	47.7	7.87	56.9	9.52	66.1	11.3	70.7	12.2	75.2	13.1	84.4	15.0	92.2	17.0
		20	47.7	8.01	56.9	9.70	66.1	11.5	70.7	12.4	75.2	13.6	84.4	16.1	90.9	17.8
		21	47.7	8.09	56.9	9.80	66.1	11.7	70.7	12.8	75.2	14.1	84.4	16.6	90.3	18.2
		23	47.7	8.24	56.9	10.2	66.1	12.5	70.7	13.8	75.2	15.1	84.4	17.9	89.0	19.1
		25	47.7	8.68	56.9	10.9	66.1	13.4	70.7	14.7	75.2	16.1	84.4	19.1	87.7	19.9
		27	47.7	9.24	56.9	11.6	66.1	14.3	70.7	15.7	75.2	17.2	84.4	20.5	86.4	20.7
		29	47.7	9.83	56.9	12.4	66.1	15.2	70.7	16.8	75.2	18.4	83.4	21.4	85.2	21.6
		31	47.7	10.5	56.9	13.2	66.1	16.2	70.7	17.9	75.2	19.6	82.2	22.2	83.9	22.4
		33	47.7	11.1	56.9	14.0	66.1	17.3	70.7	19.1	75.2	20.9	80.9	23.1	82.6	23.3
		35	47.7	11.8	56.9	14.9	66.1	18.4	70.7	20.3	75.2	22.3	79.6	23.9	81.3	24.1
		37	47.7	12.5	56.9	15.9	66.1	19.6	70.7	21.7	75.2	23.8	78.3	24.8	80.1	25.0
		39	47.7	13.3	56.9	16.9	66.1	20.9	70.7	23.1	75.2	25.4	77.1	25.6	78.8	25.8
80	560 (62.80)	10	42.4	6.52	50.6	7.80	58.7	9.17	62.8	9.88	66.9	10.6	75.1	12.1	83.2	13.6
		12	42.4	6.62	50.6	7.94	58.7	9.33	62.8	10.1	66.9	10.8	75.1	12.3	83.2	13.9
		14	42.4	6.73	50.6	8.08	58.7	9.50	62.8	10.2	66.9	11.0	75.1	12.6	83.2	14.1
		16	42.4	6.84	50.6	8.22	58.7	9.68	62.8	10.4	66.9	11.2	75.1	12.8	83.2	14.4
		18	42.4	6.96	50.6	8.37	58.7	9.87	62.8	10.6	66.9	11.4	75.1	13.0	83.2	14.7
		20	42.4	7.09	50.6	8.53	58.7	10.1	62.8	10.8	66.9	11.7	75.1	13.5	83.2	15.7
		21	42.4	7.15	50.6	8.61	58.7	10.2	62.8	11.0	66.9	11.9	75.1	14.0	83.2	16.3
		23	42.4	7.28	50.6	8.78	58.7	10.7	62.8	11.7	66.9	12.7	75.1	15.0	83.2	17.5
		25	42.4	7.52	50.6	9.34	58.7	11.4	62.8	12.5	66.9	13.6	75.1	16.1	83.2	18.7
		27	42.4	8.00	50.6	9.95	58.7	12.1	62.8	13.3	66.9	14.5	75.1	17.2	83.2	20.0
		29	42.4	8.50	50.6	10.6	58.7	12.9	62.8	14.2	66.9	15.5	75.1	18.3	83.2	21.4
		31	42.4	9.02	50.6	11.3	58.7	13.8	62.8	15.1	66.9	16.5	75.1	19.6	81.9	22.2
		33	42.4	9.58	50.6	12.0	58.7	14.7	62.8	16.1	66.9	17.6	75.1	20.9	80.7	23.1
		35	42.4	10.2	50.6	12.7	58.7	15.6	62.8	17.1	66.9	18.8	75.1	22.2	79.4	23.9
		37	42.4	10.8	50.6	13.5	58.7	16.6	62.8	18.2	66.9	20.0	75.1	23.7	78.1	24.7
		39	42.4	11.4	50.6	14.3	58.7	17.6	62.8	19.4	66.9	21.3	75.1	25.3	76.8	25.6
70	490 (54.95)	10	37.1	5.73	44.2	6.80	51.4	7.94	55.0	8.53	58.5	9.14	65.7	10.4	72.8	11.7
		12	37.1	5.82	44.2	6.91	51.4	8.08	55.0	8.68	58.5	9.30	65.7	10.6	72.8	11.9
		14	37.1	5.91	44.2	7.03	51.4	8.22	55.0	8.84	58.5	9.47	65.7	10.8	72.8	12.1
		16	37.1	6.00	44.2	7.15	51.4	8.37	55.0	9.00	58.5	9.65	65.7	11.0	72.8	12.4
		18	37.1	6.10	44.2	7.27	51.4	8.52	55.0	9.17	58.5	9.83	65.7	11.2	72.8	12.6
		20	37.1	6.20	44.2	7.40	51.4	8.68	55.0	9.34	58.5	10.0	65.7	11.4	72.8	13.0
		21	37.1	6.26	44.2	7.47	51.4	8.76	55.0	9.43	58.5	10.1	65.7	11.6	72.8	13.4
		23	37.1	6.37	44.2	7.61	51.4	8.94	55.0	9.75	58.5	10.6	65.7	12.4	72.8	14.4
		25	37.1	6.48	44.2	7.91	51.4	9.54	55.0	10.4	58.5	11.3	65.7	13.3	72.8	15.4
		27	37.1	6.85	44.2	8.42	51.4	10.2	55.0	11.1	58.5	12.1	65.7	14.2	72.8	16.4
		29	37.1	7.27	44.2	8.95	51.4	10.8	55.0	11.8	58.5	12.9	65.7	15.1	72.8	17.5
		31	37.1	7.71	44.2	9.51	51.4	11.5	55.0	12.6	58.5	13.7	65.7	16.1	72.8	18.7
		33	37.1	8.17	44.2	10.1	51.4	12.2	55.0	13.4	58.5	14.6	65.7	17.2	72.8	19.9
		35	37.1	8.65	44.2	10.7	51.4	13.0	55.0	14.2	58.5	15.5	65.7	18.3	72.8	21.3
		37	37.1	9.16	44.2	11.4	51.4	13.8	55.0	15.1	58.5	16.5	65.7	19.5	72.8	22.7
		39	37.1	9.69	44.2	12.0	51.4	14.7	55.0	16.1	58.5	17.5	65.7	20.7	72.8	24.1
60	420 (47.10)	10	31.8	4.98	37.9	5.85	44.0	6.77	47.1	7.25	50.2	7.74	56.3	8.75	62.4	9.81
		12	31.8	5.06	37.9	5.94	44.0	6.88	47.1	7.37	50.2	7.87	56.3	8.91	62.4	9.99
		14	31.8	5.13	37.9	6.03	44.0	7.00	47.1	7.50	50.2	8.01	56.3	9.07	62.4	10.2
		16	31.8	5.21	37.9	6.13	44.0	7.12	47.1	7.63	50.2	8.15	56.3	9.24	62.4	10.4
		18	31.8	5.29	37.9	6.23	44.0	7.24	47.1	7.77	50.2	8.30	56.3	9.41	62.4	10.6
		20	31.8	5.37	37.9	6.34	44.0	7.37	47.1	7.91	50.2	8.46	56.3	9.59	62.4	10.8
		21	31.8	5.41	37.9	6.39	44.0	7.44	47.1	7.98	50.2	8.54	56.3	9.69	62.4	10.9
		23	31.8	5.50	37.9	6.51	44.0	7.58	47.1	8.13	50.2	8.70	56.3	10.1	62.4	11.6
		25	31.8	5.59	37.9	6.62	44.0	7.87	47.1	8.55	50.2	9.25	56.3	10.7	62.4	12.4
		27	31.8	5.79	37.9	7.02	44.0	8.38	47.1	9.10	50.2	9.86	56.3	11.5	62.4	13.2
		29	31.8	6.14	37.9	7.45	44.0	8.90	47.1	9.68	50.2	10.5	56.3	12.2	62.4	14.1
		31	31.8	6.50	37.9	7.91	44.0	9.46	47.1	10.3	50.2	11.2	56.3	13.0	62.4	15.0
		33	31.8	6.88	37.9	8.38	44.0	10.0	47.1	10.9	50.2	11.9	56.3	13.8	62.4	16.0
		35	31.8	7.27	37.9	8.88	44.0	10.7	47.1	11.6	50.2	12.6	56.3	14.7	62.4	17.0
		37	31.8	7.69	37.9	9.40	44.0	11.3	47.1	12.3	50.2	13.4	56.3	15.6	62.4	18.1
		39	31.8	8.12	37.9	9.95	44.0	12.0	47.1	13.1	50.2	14.2	56.3	16.6	62.4	19.2
50	350 (39.25)	10	26.5	4.28	31.6	4.96	36.7	5.67	39.3	6.05	41.8	6.43	46.9	7.22	52.0	8.04
		12	26.5	4.34	31.6	5.03	36.7	5.76	39.3	6.14	41.8	6.53	46.9	7.34	52.0	8.18
		14	26.5	4.40	31.6	5.10	36.7	5.85	39.3	6.24	41.8	6.64	46.9	7.47	52.0	8.33
		16	26.5	4.46	31.6	5.18	36.7	5.94	39.3	6.34	41.8	6.75	46.9	7.60	52.0	8.48
		18	26.5	4.52	31.6	5.26	36.7	6.04	39.3	6.45	41.8	6.87	46.9	7.73	52.0	8.63
		20	26.5	4.58	31.6	5.34	36.7	6.14	39.3	6.56	41.8	6.99	46.9	7.87	52.0	8.80
		21	26.5	4.62	31.6	5.38	36.7	6.19	39.3	6.62	41.8	7.05	46.9	7.95	52.0	8.88
		23	26.5	4.69	31.6	5.47	36.7	6.30	39.3	6.73	41.8	7.18	46.9	8.10	52.0	9.08
		25	26.5	4.76	31.6	5.56	36.7	6.41	39.3	6.88	41.8	7.40	46.9	8.50	52.0	9.69
		27	26.5	4.83	31.6	5.76	36.7	6.77	39.3	7.31	41.8	7.87	46.9	9.05	52.0	10.3
		29	26.5	5.11	31.6	6.10	36.7	7.18	39.3	7.76	41.8	8.36	46.9	9.63	52.0	11.0
		31	26.5	5.40	31.6	6.46	36.7	7.62	39.3	8.23	41.8	8.88	46.9	10.2	52.0	11.7
		33	26.5	5.71	31.6	6.83	36.7	8.07	39.3	8.73	41.8	9.42	46.9	10.9	52.0	12.4
		35	26.5	6.02	31.6	7.22	36.7	8.55	39.3	9.25	41.8	9.98	46.9	11.5	52.0	13.2
		37	26.5	6.35	31.6	7.63	36.7	9.04	39.3	9.80	41.8	10.6	46.9	12.2	52.0	14.0
		39	26.5	6.69	31.6	8.06	36.7	9.57	39.3	10.4	41.8	11.2	46.9	13.0	52.0	14.9

4TW31482-1A

4 Capacity tables

4 - 2 Cooling capacity tables

REYQ30P8

TC: Total Capacity: kW ; PI: Power Input: kW (compressor + outdoor fan motor)

Combination (%)	Capacity index (kW)	Outdoor air temp. (°CDB)	Indoor air temperature: 14.0 °CWB 20.0 °CDB TC kW	14.0 °CWB 20.0 °CDB PI kW	16.0 °CWB 23.0 °CDB TC kW	16.0 °CWB 23.0 °CDB PI kW	18.0 °CWB 26.0 °CDB TC kW	18.0 °CWB 26.0 °CDB PI kW	19.0 °CWB 27.0 °CDB TC kW	19.0 °CWB 27.0 °CDB PI kW	20.0 °CWB 28.0 °CDB TC kW	20.0 °CWB 28.0 °CDB PI kW	22.0 °CWB 30.0 °CDB TC kW	22.0 °CWB 30.0 °CDB PI kW	24.0 °CWB 32.0 °CDB TC kW	24.0 °CWB 32.0 °CDB PI kW
130	975 (110.50)	10	74.6	12.2	88.9	15.0	103	17.8	107	17.8	108	17.8	111	17.8	114	17.8
		12	74.6	12.5	88.9	15.3	103	18.2	106	18.2	107	18.2	110	18.2	112	18.2
		14	74.6	12.7	88.9	15.6	103	18.4	104	18.4	106	18.4	108	18.4	111	18.4
		16	74.6	13.0	88.9	15.9	102	18.3	103	18.4	104	18.4	107	18.4	110	18.4
		18	74.6	13.2	88.9	16.2	100	19.0	102	19.1	103	19.2	106	19.4	108	19.6
		20	74.6	13.5	88.9	17.2	98.8	19.9	100	20.0	101	20.1	104	20.3	107	20.5
		21	74.6	13.8	88.9	17.9	98.1	20.4	99.5	20.5	101	20.6	103	20.8	106	21.0
		23	74.6	14.8	88.9	19.1	96.7	21.3	98.1	21.4	99.4	21.5	102	21.8	105	22.0
		25	74.6	15.9	88.9	20.5	95.3	22.3	96.7	22.4	98.0	22.5	101	22.7	103	23.0
		27	74.6	16.9	88.9	21.9	94.0	23.2	95.3	23.3	96.6	23.4	99.3	23.7	102	23.9
		29	74.6	18.1	88.9	23.4	92.6	24.1	93.9	24.3	95.3	24.4	98.0	24.7	101	24.9
		31	74.6	19.3	88.5	24.8	91.2	25.1	92.5	25.2	93.9	25.4	96.6	25.6	99.3	25.9
		33	74.6	20.5	87.1	25.7	89.8	26.0	91.2	26.2	92.5	26.3	95.2	26.6	97.9	26.9
		35	74.6	21.9	85.7	26.7	88.4	27.0	89.8	27.1	91.1	27.3	93.8	27.6	96.5	27.9
		37	74.6	23.3	84.4	27.6	87.0	27.9	88.4	28.1	89.7	28.3	92.4	28.6	95.1	28.9
		39	74.6	24.8	83.0	28.6	85.7	28.9	87.0	29.1	88.4	29.3	91.0	29.6	93.7	29.9
120	900 (102.00)	10	68.8	11.2	82.1	13.7	95.4	16.3	102	17.6	107	17.6	109	17.6	112	17.6
		12	68.8	11.4	82.1	13.9	95.4	16.6	102	17.9	105	17.9	108	17.9	110	17.9
		14	68.8	11.6	82.1	14.2	95.4	16.9	102	18.2	104	18.2	106	18.2	109	18.2
		16	68.8	11.8	82.1	14.5	95.4	17.2	101	18.4	103	18.4	105	18.4	108	18.4
		18	68.8	12.1	82.1	14.8	95.4	17.8	99.9	19.0	101	19.1	104	19.3	106	19.4
		20	68.8	12.3	82.1	15.3	95.4	19.1	98.6	19.9	99.8	20.0	102	20.2	105	20.4
		21	68.8	12.4	82.1	15.9	95.4	19.8	97.9	20.4	99.1	20.5	102	20.7	104	20.9
		23	68.8	13.3	82.1	17.0	95.2	21.2	96.5	21.3	97.7	21.4	100	21.6	103	21.8
		25	68.8	14.2	82.1	18.2	93.9	22.1	95.1	22.2	96.3	22.4	98.8	22.6	101	22.8
		27	68.8	15.1	82.1	19.5	92.5	23.1	93.7	23.2	95.0	23.3	97.4	23.5	99.9	23.7
		29	68.8	16.1	82.1	20.8	91.1	24.0	92.3	24.1	93.6	24.2	96.1	24.5	98.5	24.7
		31	68.8	17.2	82.1	22.2	89.7	24.9	90.9	25.1	92.2	25.2	94.7	25.4	97.2	25.7
		33	68.8	18.3	82.1	23.7	88.3	25.9	89.6	26.0	90.8	26.1	93.3	26.4	95.8	26.7
		35	68.8	19.5	82.1	25.2	86.9	26.8	88.2	27.0	89.4	27.1	91.9	27.4	94.4	27.7
		37	68.8	20.8	82.1	26.9	85.6	27.8	86.8	27.9	88.0	28.1	90.5	28.4	93.0	28.7
		39	68.8	22.1	81.7	28.4	84.2	28.7	85.4	28.9	86.7	29.0	89.1	29.4	91.6	29.7
110	825 (93.50)	10	63.1	10.2	75.3	12.4	87.4	14.7	93.5	15.9	99.6	17.1	107	17.5	110	17.5
		12	63.1	10.3	75.3	12.6	87.4	15.0	93.5	16.2	99.6	17.4	106	17.8	108	17.8
		14	63.1	10.5	75.3	12.8	87.4	15.3	93.5	16.5	99.6	17.7	105	18.2	107	18.2
		16	63.1	10.7	75.3	13.1	87.4	15.6	93.5	16.8	99.6	18.1	103	18.4	105	18.4
		18	63.1	10.9	75.3	13.3	87.4	15.9	93.5	17.3	99.5	19.0	102	19.1	104	19.3
		20	63.1	11.1	75.3	13.6	87.4	16.8	93.5	18.6	98.1	19.9	100	20.1	103	20.2
		21	63.1	11.3	75.3	14.0	87.4	17.4	93.5	19.2	97.4	20.3	99.7	20.5	102	20.7
		23	63.1	11.8	75.3	15.0	87.4	18.7	93.5	20.6	96.0	21.3	98.3	21.5	101	21.6
		25	63.1	12.6	75.3	16.1	87.4	20.0	93.5	22.1	94.6	22.2	96.9	22.4	99.2	22.6
		27	63.1	13.4	75.3	17.2	87.4	21.4	92.1	23.0	93.3	23.1	95.5	23.3	97.8	23.6
		29	63.1	14.3	75.3	18.3	87.4	22.8	90.7	24.0	91.9	24.1	94.2	24.3	96.4	24.5
		31	63.1	15.2	75.3	19.5	87.4	24.4	89.4	24.9	90.5	25.0	92.8	25.2	95.0	25.5
		33	63.1	16.2	75.3	20.8	86.8	25.7	88.0	25.8	89.1	26.0	91.4	26.2	93.7	26.5
		35	63.1	17.2	75.3	22.2	85.5	26.7	86.6	26.8	87.7	26.9	90.0	27.2	92.3	27.4
		37	63.1	18.3	75.3	23.6	84.1	27.6	85.2	27.7	86.3	27.9	88.6	28.1	90.9	28.4
		39	63.1	19.5	75.3	25.2	82.7	28.5	83.8	28.7	85.0	28.8	87.2	29.1	89.5	29.4
100	750 (85.00)	10	57.4	9.17	68.4	11.1	79.5	13.2	85.0	14.2	90.5	15.3	102	17.5	107	17.5
		12	57.4	9.33	68.4	11.3	79.5	13.4	85.0	14.5	90.5	15.6	102	17.8	106	17.8
		14	57.4	9.49	68.4	11.5	79.5	13.7	85.0	14.8	90.5	15.9	102	18.2	105	18.2
		16	57.4	9.66	68.4	11.7	79.5	13.9	85.0	15.1	90.5	16.2	101	18.4	103	18.4
		18	57.4	9.84	68.4	12.0	79.5	14.2	85.0	15.4	90.5	16.5	99.9	19.0	102	19.1
		20	57.4	10.0	68.4	12.2	79.5	14.6	85.0	16.1	90.5	17.7	98.5	19.9	101	20.1
		21	57.4	10.1	68.4	12.3	79.5	15.2	85.0	16.7	90.5	18.3	97.8	20.4	99.9	20.5
		23	57.4	10.4	68.4	13.1	79.5	16.2	85.0	17.9	90.5	19.7	96.4	21.3	98.5	21.5
		25	57.4	11.1	68.4	14.1	79.5	17.4	85.0	19.2	90.5	21.1	95.0	22.2	97.1	22.4
		27	57.4	11.8	68.4	15.0	79.5	18.6	85.0	20.5	90.5	22.5	93.6	23.2	95.7	23.4
		29	57.4	12.6	68.4	16.0	79.5	19.8	85.0	21.9	90.2	23.9	92.3	24.1	94.3	24.3
		31	57.4	13.4	68.4	17.0	79.5	21.2	85.0	23.4	88.8	24.8	90.9	25.1	92.9	25.3
		33	57.4	14.2	68.4	18.2	79.5	22.6	85.0	24.9	87.4	25.8	89.5	26.0	91.6	26.2
		35	57.4	15.1	68.4	19.3	79.5	24.0	85.0	26.6	86.0	26.7	88.1	27.0	90.2	27.2
		37	57.4	16.1	68.4	20.6	79.5	25.6	83.6	27.5	84.7	27.7	86.7	27.9	88.8	28.2
		39	57.4	17.1	68.4	21.9	79.5	27.3	82.2	28.5	83.3	28.6	85.3	28.9	87.4	29.1

4TW31482-1A

NOTES - ANMERKUNGEN - Σημειώσεις - NOTAS - REMARQUES - NOTE - OPMERKINGEN - примечания - NOTLAR

1 The above table shows the average value of conditions which may occur.
Die obige Tabelle zeigt den Durchschnittswert der Bedingungen, die auftreten können.
Στον παραπάνω πίνακα αναγράφεται η μέση τιμή για συνθήκες που μπορεί να προκύψουν.
La tabla de arriba muestra el valor medio de condiciones que pueden ocurrir.
Le tableau ci-dessus donne la valeur moyenne pour des conditions qui peuvent survenir.
La tabella in alto mostra il valore delle condizioni medie che si possono riscontrare.
De tabel hierboven geeft de gemiddelde waarde aan van situaties die kunnen voorvallen.
Таблица расположенная выше показывает среднее значение условий, которые могут наступить.
Yukarıdaki tablo meydana gelebilecek koşulların ortalama değerini göstermektedir.

4 Capacity tables

4 - 2 Cooling capacity tables

REYQ30P8

TC: Total Capacity: kW ; PI: Power Input: kW (compressor + outdoor fan motor)

Combination (%)	Capacity index (kW)	Outdoor air temp. (°CDB)	Indoor air temperature: 14.0 °CWB / 20.0 °CDB		16.0 °CWB / 23.0 °CDB		18.0 °CWB / 26.0 °CDB		19.0 °CWB / 27.0 °CDB		20.0 °CWB / 28.0 °CDB		22.0 °CWB / 30.0 °CDB		24.0 °CWB / 32.0 °CDB	
			TC	PI	TC	PI	TC	PI	TC	PI	TC	PI	TC	PI	TC	PI
			kW	kW	kW	kW	kW	kW	kW	kW	kW	kW	kW	kW	kW	kW
90	675	10	51.6	8.21	61.6	9.89	71.5	11.7	76.5	12.6	81.5	13.6	91.4	15.5	101	17.4
	(76.50)	12	51.6	8.34	61.6	10.1	71.5	11.9	76.5	12.8	81.5	13.8	91.4	15.8	101	17.8
		14	51.6	8.49	61.6	10.3	71.5	12.1	76.5	13.1	81.5	14.1	91.4	16.1	101	18.1
		16	51.6	8.64	61.6	10.4	71.5	12.4	76.5	13.3	81.5	14.3	91.4	16.4	101	18.4
		18	51.6	8.79	61.6	10.6	71.5	12.6	76.5	13.6	81.5	14.6	91.4	16.7	99.8	19.0
		20	51.6	8.95	61.6	10.8	71.5	12.8	76.5	13.9	81.5	15.2	91.4	18.0	98.4	19.9
		21	51.6	9.04	61.6	11.0	71.5	13.1	76.5	14.4	81.5	15.7	91.4	18.6	97.7	20.4
		23	51.6	9.21	61.6	11.4	71.5	14.0	76.5	15.4	81.5	16.8	91.4	20.0	96.4	21.3
		25	51.6	9.70	61.6	12.2	71.5	14.9	76.5	16.4	81.5	18.0	91.4	21.4	95.0	22.2
		27	51.6	10.3	61.6	13.0	71.5	16.0	76.5	17.6	81.5	19.3	91.4	22.9	93.6	23.2
		29	51.6	11.0	61.6	13.8	71.5	17.0	76.5	18.8	81.5	20.6	90.4	23.9	92.2	24.1
		31	51.6	11.7	61.6	14.7	71.5	18.2	76.5	20.0	81.5	21.9	89.0	24.9	90.8	25.1
		33	51.6	12.4	61.6	15.7	71.5	19.3	76.5	21.3	81.5	23.4	87.6	25.8	89.4	26.0
		35	51.6	13.2	61.6	16.7	71.5	20.6	76.5	22.7	81.5	25.0	86.2	26.7	88.1	26.9
		37	51.6	14.0	61.6	17.7	71.5	21.9	76.5	24.2	81.5	26.6	84.8	27.7	86.7	27.9
		39	51.6	14.8	61.6	18.8	71.5	23.3	76.5	25.8	81.5	28.3	83.4	28.6	85.3	28.9
80	600	10	45.9	7.28	54.7	8.72	63.6	10.2	68.0	11.0	72.4	11.8	81.3	13.5	90.1	15.2
	(68.00)	12	45.9	7.40	54.7	8.87	63.6	10.4	68.0	11.2	72.4	12.1	81.3	13.8	90.1	15.5
		14	45.9	7.52	54.7	9.03	63.6	10.6	68.0	11.4	72.4	12.3	81.3	14.0	90.1	15.8
		16	45.9	7.65	54.7	9.19	63.6	10.8	68.0	11.7	72.4	12.5	81.3	14.3	90.1	16.1
		18	45.9	7.78	54.7	9.36	63.6	11.0	68.0	11.9	72.4	12.8	81.3	14.6	90.1	16.4
		20	45.9	7.92	54.7	9.53	63.6	11.2	68.0	12.1	72.4	13.0	81.3	15.1	90.1	17.6
		21	45.9	7.99	54.7	9.62	63.6	11.4	68.0	12.2	72.4	13.3	81.3	15.7	90.1	18.2
		23	45.9	8.14	54.7	9.81	63.6	11.9	68.0	13.0	72.4	14.2	81.3	16.8	90.1	19.5
		25	45.9	8.40	54.7	10.4	63.6	12.7	68.0	13.9	72.4	15.2	81.3	17.9	90.1	20.9
		27	45.9	8.94	54.7	11.1	63.6	13.6	68.0	14.9	72.4	16.2	81.3	19.2	90.1	22.4
		29	45.9	9.50	54.7	11.8	63.6	14.5	68.0	15.9	72.4	17.3	81.3	20.5	90.1	23.9
		31	45.9	10.1	54.7	12.6	63.6	15.4	68.0	16.9	72.4	18.5	81.3	21.9	88.7	24.8
		33	45.9	10.7	54.7	13.4	63.6	16.4	68.0	18.0	72.4	19.7	81.3	23.3	87.3	25.8
		35	45.9	11.4	54.7	14.2	63.6	17.4	68.0	19.2	72.4	21.0	81.3	24.9	86.0	26.7
		37	45.9	12.0	54.7	15.1	63.6	18.5	68.0	20.4	72.4	22.3	81.3	26.5	84.6	27.7
		39	45.9	12.8	54.7	16.0	63.6	19.7	68.0	21.7	72.4	23.8	81.3	28.2	83.2	28.6
70	525	10	40.2	6.40	47.9	7.60	55.6	8.87	59.5	9.53	63.4	10.2	71.1	11.6	78.8	13.1
	(59.50)	12	40.2	6.50	47.9	7.72	55.6	9.03	59.5	9.70	63.4	10.4	71.1	11.8	78.8	13.3
		14	40.2	6.60	47.9	7.85	55.6	9.18	59.5	9.88	63.4	10.6	71.1	12.0	78.8	13.5
		16	40.2	6.71	47.9	7.99	55.6	9.35	59.5	10.1	63.4	10.8	71.1	12.3	78.8	13.8
		18	40.2	6.82	47.9	8.13	55.6	9.52	59.5	10.2	63.4	11.0	71.1	12.5	78.8	14.1
		20	40.2	6.93	47.9	8.28	55.6	9.70	59.5	10.4	63.4	11.2	71.1	12.8	78.8	14.5
		21	40.2	6.99	47.9	8.35	55.6	9.79	59.5	10.5	63.4	11.3	71.1	13.0	78.8	15.0
		23	40.2	7.12	47.9	8.51	55.6	9.99	59.5	10.9	63.4	11.9	71.1	13.9	78.8	16.1
		25	40.2	7.24	47.9	8.85	55.6	10.7	59.5	11.6	63.4	12.7	71.1	14.8	78.8	17.2
		27	40.2	7.66	47.9	9.41	55.6	11.4	59.5	12.4	63.4	13.5	71.1	15.8	78.8	18.4
		29	40.2	8.12	47.9	10.0	55.6	12.1	59.5	13.2	63.4	14.4	71.1	16.9	78.8	19.6
		31	40.2	8.61	47.9	10.6	55.6	12.9	59.5	14.1	63.4	15.3	71.1	18.0	78.8	20.9
		33	40.2	9.13	47.9	11.3	55.6	13.7	59.5	15.0	63.4	16.3	71.1	19.2	78.8	22.3
		35	40.2	9.67	47.9	12.0	55.6	14.5	59.5	15.9	63.4	17.4	71.1	20.4	78.8	23.8
		37	40.2	10.2	47.9	12.7	55.6	15.4	59.5	16.9	63.4	18.5	71.1	21.7	78.8	25.3
		39	40.2	10.8	47.9	13.5	55.6	16.4	59.5	18.0	63.4	19.6	71.1	23.1	78.8	27.0
60	450	10	34.4	5.57	41.1	6.54	47.7	7.57	51.0	8.10	54.3	8.65	60.9	9.78	67.6	11.0
	(51.00)	12	34.4	5.65	41.1	6.64	47.7	7.69	51.0	8.24	54.3	8.80	60.9	9.96	67.6	11.2
		14	34.4	5.73	41.1	6.74	47.7	7.82	51.0	8.38	54.3	8.95	60.9	10.1	67.6	11.4
		16	34.4	5.82	41.1	6.85	47.7	7.95	51.0	8.53	54.3	9.11	60.9	10.3	67.6	11.6
		18	34.4	5.91	41.1	6.97	47.7	8.09	51.0	8.68	54.3	9.28	60.9	10.5	67.6	11.8
		20	34.4	6.00	41.1	7.08	47.7	8.24	51.0	8.84	54.3	9.45	60.9	10.7	67.6	12.0
		21	34.4	6.05	41.1	7.15	47.7	8.31	51.0	8.92	54.3	9.54	60.9	10.8	67.6	12.2
		23	34.4	6.15	41.1	7.27	47.7	8.47	51.0	9.09	54.3	9.73	60.9	11.3	67.6	12.9
		25	34.4	6.25	41.1	7.40	47.7	8.80	51.0	9.55	54.3	10.3	60.9	12.0	67.6	13.8
		27	34.4	6.48	41.1	7.85	47.7	9.36	51.0	10.2	54.3	11.0	60.9	12.8	67.6	14.7
		29	34.4	6.86	41.1	8.33	47.7	9.95	51.0	10.8	54.3	11.7	60.9	13.6	67.6	15.7
		31	34.4	7.27	41.1	8.84	47.7	10.6	51.0	11.5	54.3	12.5	60.9	14.5	67.6	16.8
		33	34.4	7.69	41.1	9.37	47.7	11.2	51.0	12.2	54.3	13.3	60.9	15.5	67.6	17.8
		35	34.4	8.13	41.1	9.92	47.7	11.9	51.0	13.0	54.3	14.1	60.9	16.4	67.6	19.0
		37	34.4	8.59	41.1	10.5	47.7	12.6	51.0	13.8	54.3	14.9	60.9	17.5	67.6	20.2
		39	34.4	9.07	41.1	11.1	47.7	13.4	51.0	14.6	54.3	15.9	60.9	18.6	67.6	21.5
50	375	10	28.7	4.79	34.2	5.54	39.7	6.34	42.5	6.76	45.3	7.18	50.8	8.07	56.3	8.99
	(42.50)	12	28.7	4.85	34.2	5.62	39.7	6.44	42.5	6.86	45.3	7.30	50.8	8.20	56.3	9.14
		14	28.7	4.91	34.2	5.70	39.7	6.54	42.5	6.97	45.3	7.42	50.8	8.34	56.3	9.31
		16	28.7	4.98	34.2	5.79	39.7	6.64	42.5	7.09	45.3	7.54	50.8	8.49	56.3	9.47
		18	28.7	5.05	34.2	5.87	39.7	6.75	42.5	7.21	45.3	7.67	50.8	8.64	56.3	9.65
		20	28.7	5.12	34.2	5.97	39.7	6.86	42.5	7.33	45.3	7.81	50.8	8.80	56.3	9.83
		21	28.7	5.16	34.2	6.01	39.7	6.92	42.5	7.40	45.3	7.88	50.8	8.88	56.3	9.93
		23	28.7	5.24	34.2	6.11	39.7	7.04	42.5	7.53	45.3	8.02	50.8	9.05	56.3	10.2
		25	28.7	5.32	34.2	6.21	39.7	7.17	42.5	7.68	45.3	8.27	50.8	9.50	56.3	10.8
		27	28.7	5.40	34.2	6.44	39.7	7.57	42.5	8.17	45.3	8.79	50.8	10.1	56.3	11.5
		29	28.7	5.71	34.2	6.82	39.7	8.03	42.5	8.67	45.3	9.34	50.8	10.8	56.3	12.3
		31	28.7	6.04	34.2	7.22	39.7	8.51	42.5	9.20	45.3	9.92	50.8	11.4	56.3	13.1
		33	28.7	6.38	34.2	7.64	39.7	9.02	42.5	9.76	45.3	10.5	50.8	12.2	56.3	13.9
		35	28.7	6.73	34.2	8.07	39.7	9.55	42.5	10.3	45.3	11.2	50.8	12.9	56.3	14.8
		37	28.7	7.10	34.2	8.53	39.7	10.1	42.5	11.0	45.3	11.8	50.8	13.7	56.3	15.7
		39	28.7	7.48	34.2	9.01	39.7	10.7	42.5	11.6	45.3	12.5	50.8	14.5	56.3	16.7

4TW31482-1A

4 Capacity tables

4 - 2 Cooling capacity tables

REYQ32P8

TC: Total Capacity: kW ; PI: Power Input: kW (compressor + outdoor fan motor)

Combination (%)	Capacity index (kW)	Outdoor air temp. (°CDB)	Indoor air temperature: 14.0 °CWB 20.0 °CDB TC kW	14.0 °CWB 20.0 °CDB PI kW	16.0 °CWB 23.0 °CDB TC kW	16.0 °CWB 23.0 °CDB PI kW	18.0 °CWB 26.0 °CDB TC kW	18.0 °CWB 26.0 °CDB PI kW	19.0 °CWB 27.0 °CDB TC kW	19.0 °CWB 27.0 °CDB PI kW	20.0 °CWB 28.0 °CDB TC kW	20.0 °CWB 28.0 °CDB PI kW	22.0 °CWB 30.0 °CDB TC kW	22.0 °CWB 30.0 °CDB PI kW	24.0 °CWB 32.0 °CDB TC kW	24.0 °CWB 32.0 °CDB PI kW
130	1040 (117.00)	10	79.0	13.1	94.2	16.0	109	19.0	113	19.0	115	19.0	118	19.0	120	19.0
		12	79.0	13.3	94.2	16.3	109	19.4	112	19.4	113	19.4	116	19.4	119	19.4
		14	79.0	13.6	94.2	16.6	109	19.6	110	19.6	112	19.6	115	19.6	118	19.6
		16	79.0	13.8	94.2	16.9	108	19.5	109	19.6	110	19.6	113	19.6	116	19.7
		18	79.0	14.1	94.2	17.3	106	20.3	107	20.4	109	20.5	112	20.7	115	20.9
		20	79.0	14.4	94.2	18.4	105	21.3	106	21.4	107	21.5	110	21.7	113	21.9
		21	79.0	14.8	94.2	19.1	104	21.8	105	21.9	107	22.0	110	22.2	112	22.4
		23	79.0	15.8	94.2	20.4	102	22.8	104	22.9	105	23.0	108	23.2	111	23.5
		25	79.0	16.9	94.2	21.9	101	23.8	102	23.9	104	24.0	107	24.3	109	24.5
		27	79.0	18.1	94.2	23.4	99.5	24.8	101	24.9	102	25.0	105	25.3	108	25.6
		29	79.0	19.3	94.2	25.0	98.0	25.8	99.4	25.9	101	26.1	104	26.3	107	26.6
		31	79.0	20.6	93.7	26.5	96.6	26.8	98.0	26.9	99.4	27.1	102	27.4	105	27.7
		33	79.0	21.9	92.2	27.5	95.1	27.8	96.5	28.0	97.9	28.1	101	28.4	104	28.7
		35	79.0	23.4	90.8	28.5	93.6	28.8	95.1	29.0	96.5	29.1	99.3	29.5	102	29.8
		37	79.0	24.9	89.3	29.5	92.2	29.8	93.6	30.0	95.0	30.2	97.9	30.5	101	30.9
		39	79.0	26.5	87.9	30.5	90.7	30.9	92.1	31.0	93.5	31.2	96.4	31.6	99.2	32.0
120	960 (108.00)	10	72.9	11.9	86.9	14.6	101	17.4	108	18.8	113	18.8	116	18.8	118	18.8
		12	72.9	12.2	86.9	14.9	101	17.7	108	19.1	112	19.1	114	19.1	117	19.1
		14	72.9	12.4	86.9	15.2	101	18.0	108	19.5	110	19.5	113	19.5	115	19.5
		16	72.9	12.6	86.9	15.4	101	18.4	107	19.6	109	19.6	111	19.6	114	19.7
		18	72.9	12.9	86.9	15.8	101	19.0	106	20.3	107	20.4	110	20.6	112	20.7
		20	72.9	13.1	86.9	16.4	101	20.4	104	21.3	106	21.4	108	21.6	111	21.8
		21	72.9	13.3	86.9	17.0	101	21.2	104	21.8	105	21.9	108	22.1	110	22.3
		23	72.9	14.2	86.9	18.2	101	22.6	102	22.8	103	22.9	106	23.1	109	23.3
		25	72.9	15.1	86.9	19.4	99.4	23.6	101	23.7	102	23.9	105	24.1	107	24.3
		27	72.9	16.2	86.9	20.8	97.9	24.6	99.2	24.7	101	24.9	103	25.1	106	25.4
		29	72.9	17.2	86.9	22.2	96.4	25.6	97.8	25.8	99.1	25.9	102	26.1	104	26.4
		31	72.9	18.4	86.9	23.7	95.0	26.6	96.3	26.8	97.6	26.9	100	27.2	103	27.4
		33	72.9	19.6	86.9	25.3	93.5	27.6	94.8	27.8	96.1	27.9	98.8	28.2	101	28.5
		35	72.9	20.8	86.9	27.0	92.1	28.6	93.4	28.8	94.7	28.9	97.3	29.2	99.9	29.5
		37	72.9	22.2	86.9	28.7	90.6	29.6	91.9	29.8	93.2	30.0	95.8	30.3	98.5	30.6
		39	72.9	23.6	86.5	30.3	89.1	30.7	90.4	30.8	91.8	31.0	94.4	31.3	97.0	31.7
110	880 (99.00)	10	66.8	10.9	79.7	13.2	92.6	15.7	99.0	17.0	105	18.2	114	18.7	116	18.7
		12	66.8	11.0	79.7	13.5	92.6	16.0	99.0	17.3	105	18.6	112	19.0	115	19.0
		14	66.8	11.2	79.7	13.7	92.6	16.3	99.0	17.6	105	18.9	111	19.4	113	19.4
		16	66.8	11.5	79.7	14.0	92.6	16.6	99.0	18.0	105	19.3	109	19.6	112	19.7
		18	66.8	11.7	79.7	14.3	92.6	16.9	99.0	18.5	105	20.2	108	20.4	110	20.6
		20	66.8	11.9	79.7	14.5	92.6	17.9	99.0	19.8	104	21.2	106	21.4	109	21.6
		21	66.8	12.0	79.7	15.0	92.6	18.6	99.0	20.5	103	21.7	106	21.9	108	22.1
		23	66.8	12.6	79.7	16.0	92.6	19.9	99.0	22.0	102	22.7	104	22.9	106	23.1
		25	66.8	13.4	79.7	17.2	92.6	21.3	99.0	23.6	100	23.7	103	23.9	105	24.1
		27	66.8	14.3	79.7	18.3	92.6	22.8	97.5	24.6	98.7	24.7	101	24.9	104	25.1
		29	66.8	15.3	79.7	19.6	92.6	24.4	96.1	25.6	97.3	25.7	99.7	25.9	102	26.2
		31	66.8	16.3	79.7	20.9	92.6	26.0	94.6	26.6	95.8	26.7	98.2	27.0	101	27.2
		33	66.8	17.3	79.7	22.2	91.9	27.5	93.1	27.6	94.4	27.7	96.8	28.0	99.2	28.2
		35	66.8	18.4	79.7	23.7	90.5	28.5	91.7	28.6	92.9	28.7	95.3	29.0	97.7	29.3
		37	66.8	19.6	79.7	25.2	89.0	29.5	90.2	29.6	91.4	29.8	93.8	30.0	96.2	30.3
		39	66.8	20.8	79.7	26.9	87.6	30.5	88.8	30.6	90.0	30.8	92.4	31.1	94.8	31.4
100	800 (90.00)	10	60.7	9.79	72.4	11.9	84.1	14.1	90.0	15.2	95.9	16.3	108	18.7	114	18.7
		12	60.7	9.96	72.4	12.1	84.1	14.3	90.0	15.5	95.9	16.6	108	19.0	112	19.0
		14	60.7	10.1	72.4	12.3	84.1	14.6	90.0	15.8	95.9	17.0	108	19.4	111	19.4
		16	60.7	10.3	72.4	12.5	84.1	14.9	90.0	16.1	95.9	17.3	107	19.6	109	19.7
		18	60.7	10.5	72.4	12.8	84.1	15.2	90.0	16.4	95.9	17.6	106	20.3	108	20.4
		20	60.7	10.7	72.4	13.0	84.1	15.6	90.0	17.2	95.9	18.9	104	21.3	106	21.4
		21	60.7	10.8	72.4	13.2	84.1	16.2	90.0	17.8	95.9	19.6	104	21.8	106	21.9
		23	60.7	11.1	72.4	14.0	84.1	17.3	90.0	19.1	95.9	21.0	102	22.7	104	22.9
		25	60.7	11.8	72.4	15.0	84.1	18.5	90.0	20.5	95.9	22.5	101	23.7	103	23.9
		27	60.7	12.6	72.4	16.0	84.1	19.8	90.0	21.9	95.9	24.0	99.1	24.7	101	24.9
		29	60.7	13.4	72.4	17.1	84.1	21.2	90.0	23.4	95.5	25.5	97.7	25.7	99.9	26.0
		31	60.7	14.3	72.4	18.2	84.1	22.6	90.0	25.0	94.0	26.5	96.2	26.8	98.4	27.0
		33	60.7	15.2	72.4	19.4	84.1	24.1	90.0	26.6	92.6	27.5	94.8	27.8	96.9	28.0
		35	60.7	16.2	72.4	20.6	84.1	25.7	90.0	28.4	91.1	28.5	93.3	28.8	95.5	29.0
		37	60.7	17.2	72.4	22.0	84.1	27.4	88.5	29.4	89.6	29.5	91.8	29.8	94.0	30.1
		39	60.7	18.2	72.4	23.4	84.1	29.1	87.1	30.4	88.2	30.5	90.4	30.8	92.5	31.1

4TW31482-1A

NOTES - ANMERKUNGEN - Σημειώσεις - NOTAS - REMARQUES - NOTE - OPMERKINGEN - примечания - NOTLAR

1 The above table shows the average value of conditions which may occur.
Die obige Tabelle zeigt den Durchschnittswert der Bedingungen, die auftreten können.
Στον παραπάνω πίνακα αναγράφεται η μέση τιμή για συνθήκες που μπορεί να προκύψουν.
La tabla de arriba muestra el valor medio de condiciones que pueden ocurrir.
Le tableau ci-dessus donne la valeur moyenne pour des conditions qui peuvent survenir.
La tabella in alto mostra il valore delle condizioni medie che si possono riscontrare.
De tabel hierboven geeft de gemiddelde waarde aan van situaties die kunnen voorvallen.
Таблица расположенная выше показывает среднее значение условий, которые могут наступить.
Yukarıdaki tablo meydana gelebilecek koşulların ortalama değerini göstermektedir.

4 Capacity tables

4 - 2 Cooling capacity tables

REYQ32P8

TC: Total Capacity: kW ; PI: Power Input: kW (compressor + outdoor fan motor)

Combination (%)	Capacity index (kW)	Outdoor air temp. (°CDB)	Indoor air temperature: 14.0 °CWB / 20.0 °CDB TC kW	14.0 °CWB / 20.0 °CDB PI kW	16.0 °CWB / 23.0 °CDB TC kW	16.0 °CWB / 23.0 °CDB PI kW	18.0 °CWB / 26.0 °CDB TC kW	18.0 °CWB / 26.0 °CDB PI kW	19.0 °CWB / 27.0 °CDB TC kW	19.0 °CWB / 27.0 °CDB PI kW	20.0 °CWB / 28.0 °CDB TC kW	20.0 °CWB / 28.0 °CDB PI kW	22.0 °CWB / 30.0 °CDB TC kW	22.0 °CWB / 30.0 °CDB PI kW	24.0 °CWB / 32.0 °CDB TC kW	24.0 °CWB / 32.0 °CDB PI kW
90	720	10	54.7	8.76	65.2	10.6	75.7	12.5	81.0	13.5	86.3	14.5	96.8	16.5	107	18.6
	(81.00)	12	54.7	8.91	65.2	10.8	75.7	12.7	81.0	13.7	86.3	14.7	96.8	16.8	107	19.0
		14	54.7	9.06	65.2	10.9	75.7	12.9	81.0	14.0	86.3	15.0	96.8	17.2	107	19.3
		16	54.7	9.22	65.2	11.2	75.7	13.2	81.0	14.2	86.3	15.3	96.8	17.5	107	19.7
		18	54.7	9.39	65.2	11.4	75.7	13.4	81.0	14.5	86.3	15.6	96.8	17.8	106	20.3
		20	54.7	9.56	65.2	11.6	75.7	13.7	81.0	14.8	86.3	16.2	96.8	19.2	104	21.3
		21	54.7	9.65	65.2	11.7	75.7	13.9	81.0	15.3	86.3	16.8	96.8	19.9	103	21.8
		23	54.7	9.83	65.2	12.2	75.7	14.9	81.0	16.4	86.3	18.0	96.8	21.3	102	22.7
		25	54.7	10.4	65.2	13.0	75.7	16.0	81.0	17.6	86.3	19.2	96.8	22.8	101	23.7
		27	54.7	11.0	65.2	13.9	75.7	17.0	81.0	18.8	86.3	20.6	96.8	24.4	99.1	24.7
		29	54.7	11.7	65.2	14.8	75.7	18.2	81.0	20.0	86.3	22.0	95.7	25.5	97.6	25.7
		31	54.7	12.5	65.2	15.7	75.7	19.4	81.0	21.4	86.3	23.4	94.2	26.5	96.2	26.7
		33	54.7	13.2	65.2	16.7	75.7	20.7	81.0	22.8	86.3	25.0	92.7	27.5	94.7	27.8
		35	54.7	14.1	65.2	17.8	75.7	22.0	81.0	24.3	86.3	26.6	91.3	28.5	93.2	28.8
		37	54.7	14.9	65.2	18.9	75.7	23.4	81.0	25.8	86.3	28.4	89.8	29.6	91.8	29.8
		39	54.7	15.8	65.2	20.1	75.7	24.9	81.0	27.5	86.3	30.3	88.3	30.6	90.3	30.8
80	640	10	48.6	7.78	58.0	9.31	67.3	10.9	72.0	11.8	76.7	12.7	86.0	14.4	95.4	16.3
	(72.00)	12	48.6	7.90	58.0	9.47	67.3	11.1	72.0	12.0	76.7	12.9	86.0	14.7	95.4	16.6
		14	48.6	8.03	58.0	9.64	67.3	11.3	72.0	12.2	76.7	13.1	86.0	15.0	95.4	16.9
		16	48.6	8.17	58.0	9.81	67.3	11.6	72.0	12.5	76.7	13.4	86.0	15.3	95.4	17.2
		18	48.6	8.31	58.0	9.99	67.3	11.8	72.0	12.7	76.7	13.6	86.0	15.6	95.4	17.5
		20	48.6	8.46	58.0	10.2	67.3	12.0	72.0	12.9	76.7	13.9	86.0	16.1	95.4	18.8
		21	48.6	8.53	58.0	10.3	67.3	12.1	72.0	13.1	76.7	14.2	86.0	16.7	95.4	19.4
		23	48.6	8.69	58.0	10.5	67.3	12.7	72.0	13.9	76.7	15.2	86.0	17.9	95.4	20.8
		25	48.6	8.97	58.0	11.1	67.3	13.6	72.0	14.9	76.7	16.2	86.0	19.2	95.4	22.3
		27	48.6	9.54	58.0	11.9	67.3	14.5	72.0	15.9	76.7	17.3	86.0	20.5	95.4	23.9
		29	48.6	10.1	58.0	12.6	67.3	15.4	72.0	16.9	76.7	18.5	86.0	21.9	95.4	25.5
		31	48.6	10.8	58.0	13.4	67.3	16.4	72.0	18.0	76.7	19.7	86.0	23.3	93.9	26.5
		33	48.6	11.4	58.0	14.3	67.3	17.5	72.0	19.2	76.7	21.0	86.0	24.9	92.5	27.5
		35	48.6	12.1	58.0	15.2	67.3	18.6	72.0	20.5	76.7	22.4	86.0	26.5	91.0	28.5
		37	48.6	12.8	58.0	16.1	67.3	19.8	72.0	21.8	76.7	23.8	86.0	28.3	89.5	29.5
		39	48.6	13.6	58.0	17.1	67.3	21.0	72.0	23.2	76.7	25.4	86.0	30.1	88.1	30.5
70	560	10	42.5	6.84	50.7	8.11	58.9	9.47	63.0	10.2	67.1	10.9	75.3	12.4	83.5	13.9
	(63.00)	12	42.5	6.94	50.7	8.25	58.9	9.64	63.0	10.4	67.1	11.1	75.3	12.6	83.5	14.2
		14	42.5	7.05	50.7	8.39	58.9	9.81	63.0	10.5	67.1	11.3	75.3	12.9	83.5	14.5
		16	42.5	7.16	50.7	8.53	58.9	9.98	63.0	10.7	67.1	11.5	75.3	13.1	83.5	14.7
		18	42.5	7.28	50.7	8.68	58.9	10.2	63.0	10.9	67.1	11.7	75.3	13.4	83.5	15.0
		20	42.5	7.40	50.7	8.84	58.9	10.4	63.0	11.1	67.1	12.0	75.3	13.6	83.5	15.5
		21	42.5	7.47	50.7	8.92	58.9	10.5	63.0	11.3	67.1	12.1	75.3	13.8	83.5	16.0
		23	42.5	7.60	50.7	9.08	58.9	10.7	63.0	11.6	67.1	12.7	75.3	14.8	83.5	17.1
		25	42.5	7.73	50.7	9.44	58.9	11.4	63.0	12.4	67.1	13.5	75.3	15.8	83.5	18.3
		27	42.5	8.17	50.7	10.0	58.9	12.1	63.0	13.2	67.1	14.4	75.3	16.9	83.5	19.6
		29	42.5	8.67	50.7	10.7	58.9	12.9	63.0	14.1	67.1	15.4	75.3	18.0	83.5	20.9
		31	42.5	9.20	50.7	11.3	58.9	13.7	63.0	15.0	67.1	16.4	75.3	19.2	83.5	22.3
		33	42.5	9.75	50.7	12.0	58.9	14.6	63.0	16.0	67.1	17.4	75.3	20.5	83.5	23.8
		35	42.5	10.3	50.7	12.8	58.9	15.5	63.0	17.0	67.1	18.5	75.3	21.8	83.5	25.4
		37	42.5	10.9	50.7	13.6	58.9	16.5	63.0	18.1	67.1	19.7	75.3	23.2	83.5	27.0
		39	42.5	11.6	50.7	14.4	58.9	17.5	63.0	19.2	67.1	20.9	75.3	24.7	83.5	28.8
60	480	10	36.4	5.95	43.5	6.98	50.5	8.08	54.0	8.65	57.5	9.24	64.5	10.4	71.6	11.7
	(54.00)	12	36.4	6.03	43.5	7.09	50.5	8.21	54.0	8.80	57.5	9.39	64.5	10.6	71.6	11.9
		14	36.4	6.12	43.5	7.20	50.5	8.35	54.0	8.95	57.5	9.56	64.5	10.8	71.6	12.1
		16	36.4	6.21	43.5	7.32	50.5	8.49	54.0	9.10	57.5	9.73	64.5	11.0	71.6	12.4
		18	36.4	6.31	43.5	7.44	50.5	8.64	54.0	9.27	57.5	9.91	64.5	11.2	71.6	12.6
		20	36.4	6.41	43.5	7.56	50.5	8.80	54.0	9.44	57.5	10.1	64.5	11.5	71.6	12.9
		21	36.4	6.46	43.5	7.63	50.5	8.88	54.0	9.52	57.5	10.2	64.5	11.6	71.6	13.0
		23	36.4	6.56	43.5	7.76	50.5	9.04	54.0	9.71	57.5	10.4	64.5	12.0	71.6	13.8
		25	36.4	6.67	43.5	7.90	50.5	9.39	54.0	10.2	57.5	11.0	64.5	12.8	71.6	14.7
		27	36.4	6.91	43.5	8.38	50.5	10.00	54.0	10.9	57.5	11.8	64.5	13.7	71.6	15.7
		29	36.4	7.33	43.5	8.90	50.5	10.6	54.0	11.6	57.5	12.5	64.5	14.6	71.6	16.8
		31	36.4	7.76	43.5	9.43	50.5	11.3	54.0	12.3	57.5	13.3	64.5	15.5	71.6	17.9
		33	36.4	8.21	43.5	10.00	50.5	12.0	54.0	13.0	57.5	14.2	64.5	16.5	71.6	19.1
		35	36.4	8.68	43.5	10.6	50.5	12.7	54.0	13.8	57.5	15.0	64.5	17.6	71.6	20.3
		37	36.4	9.17	43.5	11.2	50.5	13.5	54.0	14.7	57.5	16.0	64.5	18.7	71.6	21.6
		39	36.4	9.69	43.5	11.9	50.5	14.3	54.0	15.6	57.5	16.9	64.5	19.8	71.6	23.0
50	400	10	30.4	5.11	36.2	5.92	42.1	6.77	45.0	7.22	47.9	7.67	53.8	8.61	59.6	9.60
	(45.00)	12	30.4	5.18	36.2	6.00	42.1	6.87	45.0	7.33	47.9	7.79	53.8	8.76	59.6	9.76
		14	30.4	5.25	36.2	6.09	42.1	6.98	45.0	7.45	47.9	7.92	53.8	8.91	59.6	9.94
		16	30.4	5.32	36.2	6.18	42.1	7.09	45.0	7.57	47.9	8.06	53.8	9.06	59.6	10.1
		18	30.4	5.39	36.2	6.27	42.1	7.21	45.0	7.69	47.9	8.19	53.8	9.23	59.6	10.3
		20	30.4	5.47	36.2	6.37	42.1	7.33	45.0	7.83	47.9	8.34	53.8	9.40	59.6	10.5
		21	30.4	5.51	36.2	6.42	42.1	7.39	45.0	7.90	47.9	8.41	53.8	9.48	59.6	10.6
		23	30.4	5.59	36.2	6.53	42.1	7.52	45.0	8.04	47.9	8.57	53.8	9.66	59.6	10.8
		25	30.4	5.68	36.2	6.63	42.1	7.65	45.0	8.20	47.9	8.83	53.8	10.1	59.6	11.6
		27	30.4	5.77	36.2	6.87	42.1	8.08	45.0	8.72	47.9	9.39	53.8	10.8	59.6	12.3
		29	30.4	6.10	36.2	7.28	42.1	8.57	45.0	9.26	47.9	9.98	53.8	11.5	59.6	13.1
		31	30.4	6.45	36.2	7.71	42.1	9.09	45.0	9.82	47.9	10.6	53.8	12.2	59.6	14.0
		33	30.4	6.81	36.2	8.15	42.1	9.63	45.0	10.4	47.9	11.2	53.8	13.0	59.6	14.8
		35	30.4	7.18	36.2	8.62	42.1	10.2	45.0	11.0	47.9	11.9	53.8	13.8	59.6	15.8
		37	30.4	7.58	36.2	9.11	42.1	10.8	45.0	11.7	47.9	12.6	53.8	14.6	59.6	16.8
		39	30.4	7.99	36.2	9.62	42.1	11.4	45.0	12.4	47.9	13.4	53.8	15.5	59.6	17.8

4TW31482-1A

4 Capacity tables

4 - 2 Cooling capacity tables

REYQ34P9

TC: Total Capacity: kW ; PI: Power Input: kW (compressor + outdoor fan motor)

Combination (%)	Capacity index (kW)	Outdoor air temp. (°CDB)	Indoor air temperature: 14.0 °CWB, 20.0 °CDB		16.0 °CWB, 23.0 °CDB		18.0 °CWB, 26.0 °CDB		19.0 °CWB, 27.0 °CDB		20.0 °CWB, 28.0 °CDB		22.0 °CWB, 30.0 °CDB		24.0 °CWB, 32.0 °CDB	
			TC	PI	TC	PI	TC	PI	TC	PI	TC	PI	TC	PI	TC	PI
			kW	kW	kW	kW	kW	kW	kW	kW	kW	kW	kW	kW	kW	kW
130	1105 (124.02)	10	83.7	12.4	99.8	15.2	116	18.0	120	18.0	122	18.0	125	18.0	128	18.0
		12	83.7	12.6	99.8	15.4	116	18.4	119	18.4	120	18.4	123	18.4	126	18.4
		14	83.7	12.9	99.8	15.7	116	18.6	117	18.6	119	18.6	122	18.6	125	18.6
		16	83.7	13.1	99.8	16.1	114	18.5	115	18.6	117	18.6	120	18.6	123	18.6
		18	83.7	13.4	99.8	16.4	112	19.2	114	19.3	115	19.4	118	19.6	121	19.8
		20	83.7	13.6	99.8	17.4	111	20.2	112	20.3	114	20.4	117	20.6	120	20.8
		21	83.7	14.0	99.8	18.1	110	20.6	112	20.7	113	20.8	116	21.0	119	21.3
		23	83.7	15.0	99.8	19.4	109	21.6	110	21.7	112	21.8	115	22.0	118	22.2
		25	83.7	16.0	99.8	20.7	107	22.5	109	22.6	110	22.8	113	23.0	116	23.2
		27	83.7	17.1	99.8	22.2	105	23.5	107	23.6	108	23.7	111	24.0	115	24.2
		29	83.7	18.3	99.8	23.7	104	24.4	105	24.5	107	24.7	110	24.9	113	25.2
		31	83.7	19.5	99.3	25.1	102	25.4	104	25.5	105	25.6	108	25.9	111	26.2
		33	83.7	20.8	97.8	26.0	101	26.3	102	26.5	104	26.6	107	26.9	110	27.2
		35	83.7	22.1	96.2	27.0	99.2	27.3	101	27.4	102	27.6	105	27.9	108	28.2
		37	83.7	23.6	94.7	27.9	97.7	28.3	99.2	28.4	101	28.6	104	28.9	107	29.2
		39	83.7	25.1	93.1	28.9	96.1	29.2	97.7	29.4	99.2	29.6	102	29.9	105	30.3
120	1020 (114.48)	10	77.3	11.3	92.1	13.8	107	16.4	114	17.8	120	17.8	123	17.8	125	17.8
		12	77.3	11.5	92.1	14.1	107	16.7	114	18.1	118	18.1	121	18.1	124	18.1
		14	77.3	11.7	92.1	14.4	107	17.1	114	18.5	117	18.5	119	18.5	122	18.5
		16	77.3	12.0	92.1	14.6	107	17.4	114	18.6	115	18.6	118	18.6	121	18.6
		18	77.3	12.2	92.1	14.9	107	18.0	112	19.2	114	19.3	116	19.5	119	19.6
		20	77.3	12.4	92.1	15.5	107	19.3	111	20.1	112	20.2	115	20.4	118	20.6
		21	77.3	12.6	92.1	16.1	107	20.0	110	20.6	111	20.7	114	20.9	117	21.1
		23	77.3	13.4	92.1	17.2	107	21.5	108	21.6	110	21.7	112	21.9	115	22.1
		25	77.3	14.3	92.1	18.4	105	22.4	107	22.5	108	22.6	111	22.8	114	23.0
		27	77.3	15.3	92.1	19.7	104	23.3	105	23.4	107	23.6	109	23.8	112	24.0
		29	77.3	16.3	92.1	21.0	102	24.3	104	24.4	105	24.5	108	24.8	111	25.0
		31	77.3	17.4	92.1	22.4	101	25.2	102	25.3	103	25.5	106	25.7	109	26.0
		33	77.3	18.5	92.1	23.9	99.1	26.2	101	26.3	102	26.4	105	26.7	107	27.0
		35	77.3	19.7	92.1	25.5	97.6	27.1	99.0	27.3	100	27.4	103	27.7	106	28.0
		37	77.3	21.0	92.1	27.2	96.0	28.1	97.4	28.2	98.8	28.4	102	28.7	104	29.0
		39	77.3	22.3	91.7	28.7	94.5	29.0	95.9	29.2	97.3	29.4	100	29.7	103	30.0
110	935 (104.94)	10	70.8	10.3	84.5	12.5	98.1	14.9	105	16.1	112	17.3	120	17.7	123	17.7
		12	70.8	10.5	84.5	12.7	98.1	15.1	105	16.4	112	17.6	119	18.0	121	18.0
		14	70.8	10.7	84.5	13.0	98.1	15.4	105	16.7	112	17.9	117	18.4	120	18.4
		16	70.8	10.9	84.5	13.2	98.1	15.7	105	17.0	112	18.3	116	18.6	118	18.6
		18	70.8	11.1	84.5	13.5	98.1	16.0	105	17.5	112	19.2	114	19.3	117	19.5
		20	70.8	11.3	84.5	13.8	98.1	17.0	105	18.8	110	20.1	113	20.3	115	20.5
		21	70.8	11.4	84.5	14.2	98.1	17.6	105	19.5	109	20.6	112	20.8	114	20.9
		23	70.8	11.9	84.5	15.2	98.1	18.9	105	20.9	108	21.5	110	21.7	113	21.9
		25	70.8	12.7	84.5	16.2	98.1	20.2	105	22.4	106	22.5	109	22.7	111	22.9
		27	70.8	13.6	84.5	17.4	98.1	21.6	103	23.3	105	23.4	107	23.6	110	23.8
		29	70.8	14.5	84.5	18.5	98.1	23.1	102	24.2	103	24.3	106	24.6	108	24.8
		31	70.8	15.4	84.5	19.8	98.1	24.7	100	25.2	102	25.3	104	25.5	107	25.8
		33	70.8	16.4	84.5	21.1	97.5	26.0	98.7	26.1	100	26.3	103	26.5	105	26.8
		35	70.8	17.4	84.5	22.4	95.9	27.0	97.2	27.1	98.5	27.2	101	27.5	104	27.7
		37	70.8	18.5	84.5	23.9	94.4	27.9	95.6	28.0	96.9	28.2	99.5	28.5	102	28.7
		39	70.8	19.7	84.5	25.4	92.8	28.9	94.1	29.0	95.4	29.1	97.9	29.4	100	29.7
100	850 (95.40)	10	64.4	9.27	76.8	11.2	89.2	13.3	95.4	14.4	102	15.5	114	17.7	121	17.7
		12	64.4	9.43	76.8	11.4	89.2	13.6	95.4	14.7	102	15.8	114	18.0	119	18.0
		14	64.4	9.60	76.8	11.7	89.2	13.8	95.4	14.9	102	16.1	114	18.4	117	18.4
		16	64.4	9.77	76.8	11.9	89.2	14.1	95.4	15.2	102	16.4	114	18.6	116	18.6
		18	64.4	9.96	76.8	12.1	89.2	14.4	95.4	15.5	102	16.7	112	19.2	114	19.3
		20	64.4	10.1	76.8	12.3	89.2	14.8	95.4	16.3	102	17.9	111	20.1	113	20.3
		21	64.4	10.2	76.8	12.5	89.2	15.3	95.4	16.9	102	18.5	110	20.6	112	20.8
		23	64.4	10.5	76.8	13.3	89.2	16.4	95.4	18.1	102	19.9	108	21.5	111	21.7
		25	64.4	11.2	76.8	14.2	89.2	17.6	95.4	19.4	102	21.3	107	22.5	109	22.7
		27	64.4	12.0	76.8	15.2	89.2	18.8	95.4	20.7	102	22.8	105	23.4	107	23.6
		29	64.4	12.7	76.8	16.2	89.2	20.1	95.4	22.1	101	24.2	104	24.4	106	24.6
		31	64.4	13.5	76.8	17.2	89.2	21.4	95.4	23.6	99.7	25.1	102	25.3	104	25.6
		33	64.4	14.4	76.8	18.4	89.2	22.8	95.4	25.2	98.1	26.1	100	26.3	103	26.5
		35	64.4	15.3	76.8	19.5	89.2	24.3	95.4	26.9	96.6	27.0	98.9	27.3	101	27.5
		37	64.4	16.3	76.8	20.8	89.2	25.9	93.8	27.8	95.0	28.0	97.3	28.2	99.7	28.5
		39	64.4	17.3	76.8	22.1	89.2	27.6	92.3	28.8	93.5	28.9	95.8	29.2	98.1	29.5

4TW31482-1A

NOTES - ANMERKUNGEN - Σημειώσεις - NOTAS - REMARQUES - NOTE - OPMERKINGEN - примечания - NOTLAR

1 The above table shows the average value of conditions which may occur.
Die obige Tabelle zeigt den Durchschnittswert der Bedingungen, die auftreten können.
Στον παραπάνω πίνακα αναγράφεται η μέση τιμή για συνθήκες που μπορεί να προκύψουν.
La tabla de arriba muestra el valor medio de condiciones que pueden ocurrir.
Le tableau ci-dessus donne la valeur moyenne pour des conditions qui peuvent survenir.
La tabella in alto mostra il valore delle condizioni medie che si possono riscontrare.
De tabel hierboven geeft de gemiddelde waarde aan van situaties die kunnen voorvallen.
Таблица расположенная выше показывает среднее значение условий, которые могут наступить.
Yukarıdaki tablo meydana gelebilecek koşulların ortalama değerini göstermektedir.

4 Capacity tables

4 - 2 Cooling capacity tables

REYQ34P9

TC: Total Capacity: kW ; PI: Power Input: kW (compressor + outdoor fan motor)

Combination (%)	Capacity index (kW)	Outdoor air temp. (°CDB)	Indoor air temperature: 14.0 °CWB / 20.0 °CDB		16.0 °CWB / 23.0 °CDB		18.0 °CWB / 26.0 °CDB		19.0 °CWB / 27.0 °CDB		20.0 °CWB / 28.0 °CDB		22.0 °CWB / 30.0 °CDB		24.0 °CWB / 32.0 °CDB	
			TC	PI	TC	PI	TC	PI	TC	PI	TC	PI	TC	PI	TC	PI
			kW	kW	kW	kW	kW	kW	kW	kW	kW	kW	kW	kW	kW	kW
90	765	10	57.9	8.30	69.1	10.0	80.3	11.8	85.9	12.8	91.4	13.7	103	15.7	114	17.6
	(85.86)	12	57.9	8.44	69.1	10.2	80.3	12.0	85.9	13.0	91.4	14.0	103	15.9	114	18.0
		14	57.9	8.58	69.1	10.4	80.3	12.3	85.9	13.2	91.4	14.2	103	16.3	114	18.3
		16	57.9	8.73	69.1	10.6	80.3	12.5	85.9	13.5	91.4	14.5	103	16.6	114	18.6
		18	57.9	8.89	69.1	10.8	80.3	12.7	85.9	13.8	91.4	14.8	103	16.9	112	19.2
		20	57.9	9.06	69.1	11.0	80.3	13.0	85.9	14.0	91.4	15.3	103	18.2	110	20.1
		21	57.9	9.14	69.1	11.1	80.3	13.2	85.9	14.5	91.4	15.9	103	18.8	110	20.6
		23	57.9	9.31	69.1	11.5	80.3	14.1	85.9	15.5	91.4	17.0	103	20.2	108	21.5
		25	57.9	9.81	69.1	12.3	80.3	15.1	85.9	16.6	91.4	18.2	103	21.6	107	22.5
		27	57.9	10.4	69.1	13.1	80.3	16.1	85.9	17.8	91.4	19.5	103	23.1	105	23.4
		29	57.9	11.1	69.1	14.0	80.3	17.2	85.9	19.0	91.4	20.8	101	24.2	103	24.4
		31	57.9	11.8	69.1	14.9	80.3	18.4	85.9	20.2	91.4	22.2	99.9	25.1	102	25.3
		33	57.9	12.5	69.1	15.9	80.3	19.6	85.9	21.6	91.4	23.7	98.3	26.1	100	26.3
		35	57.9	13.3	69.1	16.9	80.3	20.8	85.9	23.0	91.4	25.2	96.7	27.0	98.8	27.3
		37	57.9	14.1	69.1	17.9	80.3	22.2	85.9	24.5	91.4	26.9	95.2	28.0	97.3	28.2
		39	57.9	15.0	69.1	19.1	80.3	23.6	85.9	26.1	91.4	28.7	93.6	29.0	95.7	29.2
80	680	10	51.5	7.37	61.4	8.82	71.4	10.4	76.3	11.2	81.3	12.0	91.2	13.7	101	15.4
	(76.32)	12	51.5	7.48	61.4	8.97	71.4	10.5	76.3	11.4	81.3	12.2	91.2	13.9	101	15.7
		14	51.5	7.61	61.4	9.13	71.4	10.7	76.3	11.6	81.3	12.4	91.2	14.2	101	16.0
		16	51.5	7.74	61.4	9.29	71.4	10.9	76.3	11.8	81.3	12.7	91.2	14.5	101	16.3
		18	51.5	7.87	61.4	9.46	71.4	11.2	76.3	12.0	81.3	12.9	91.2	14.7	101	16.6
		20	51.5	8.01	61.4	9.64	71.4	11.4	76.3	12.3	81.3	13.2	91.2	15.3	101	17.8
		21	51.5	8.08	61.4	9.73	71.4	11.5	76.3	12.4	81.3	13.4	91.2	15.8	101	18.4
		23	51.5	8.23	61.4	9.92	71.4	12.0	76.3	13.2	81.3	14.4	91.2	17.0	101	19.7
		25	51.5	8.50	61.4	10.6	71.4	12.9	76.3	14.1	81.3	15.4	91.2	18.1	101	21.1
		27	51.5	9.04	61.4	11.3	71.4	13.7	76.3	15.0	81.3	16.4	91.2	19.4	101	22.6
		29	51.5	9.61	61.4	12.0	71.4	14.6	76.3	16.0	81.3	17.5	91.2	20.7	101	24.2
		31	51.5	10.2	61.4	12.7	71.4	15.6	76.3	17.1	81.3	18.7	91.2	22.1	99.6	25.1
		33	51.5	10.8	61.4	13.5	71.4	16.6	76.3	18.2	81.3	19.9	91.2	23.6	98.0	26.1
		35	51.5	11.5	61.4	14.4	71.4	17.6	76.3	19.4	81.3	21.2	91.2	25.1	96.5	27.0
		37	51.5	12.2	61.4	15.3	71.4	18.7	76.3	20.6	81.3	22.6	91.2	26.8	94.9	28.0
		39	51.5	12.9	61.4	16.2	71.4	19.9	76.3	21.9	81.3	24.0	91.2	28.5	93.4	28.9
70	595	10	45.1	6.48	53.8	7.69	62.4	8.97	66.8	9.64	71.1	10.3	79.8	11.7	88.5	13.2
	(66.78)	12	45.1	6.57	53.8	7.81	62.4	9.13	66.8	9.81	71.1	10.5	79.8	12.0	88.5	13.4
		14	45.1	6.68	53.8	7.94	62.4	9.29	66.8	9.99	71.1	10.7	79.8	12.2	88.5	13.7
		16	45.1	6.78	53.8	8.08	62.4	9.46	66.8	10.2	71.1	10.9	79.8	12.4	88.5	14.0
		18	45.1	6.90	53.8	8.22	62.4	9.63	66.8	10.4	71.1	11.1	79.8	12.7	88.5	14.2
		20	45.1	7.01	53.8	8.37	62.4	9.81	66.8	10.6	71.1	11.3	79.8	12.9	88.5	14.6
		21	45.1	7.07	53.8	8.45	62.4	9.90	66.8	10.7	71.1	11.4	79.8	13.1	88.5	15.2
		23	45.1	7.20	53.8	8.60	62.4	10.1	66.8	11.0	71.1	12.0	79.8	14.0	88.5	16.2
		25	45.1	7.32	53.8	8.94	62.4	10.8	66.8	11.8	71.1	12.8	79.8	15.0	88.5	17.4
		27	45.1	7.74	53.8	9.52	62.4	11.5	66.8	12.5	71.1	13.7	79.8	16.0	88.5	18.6
		29	45.1	8.22	53.8	10.1	62.4	12.2	66.8	13.4	71.1	14.6	79.8	17.1	88.5	19.8
		31	45.1	8.71	53.8	10.7	62.4	13.0	66.8	14.2	71.1	15.5	79.8	18.2	88.5	21.1
		33	45.1	9.23	53.8	11.4	62.4	13.8	66.8	15.1	71.1	16.5	79.8	19.4	88.5	22.5
		35	45.1	9.78	53.8	12.1	62.4	14.7	66.8	16.1	71.1	17.5	79.8	20.7	88.5	24.0
		37	45.1	10.4	53.8	12.8	62.4	15.6	66.8	17.1	71.1	18.7	79.8	22.0	88.5	25.6
		39	45.1	11.0	53.8	13.6	62.4	16.6	66.8	18.2	71.1	19.8	79.8	23.4	88.5	27.3
60	510	10	38.6	5.63	46.1	6.61	53.5	7.65	57.2	8.19	61.0	8.75	68.4	9.90	75.9	11.1
	(57.24)	12	38.6	5.71	46.1	6.71	53.5	7.78	57.2	8.33	61.0	8.90	68.4	10.1	75.9	11.3
		14	38.6	5.80	46.1	6.82	53.5	7.91	57.2	8.47	61.0	9.05	68.4	10.3	75.9	11.5
		16	38.6	5.88	46.1	6.93	53.5	8.04	57.2	8.62	61.0	9.22	68.4	10.4	75.9	11.7
		18	38.6	5.97	46.1	7.05	53.5	8.18	57.2	8.78	61.0	9.39	68.4	10.6	75.9	11.9
		20	38.6	6.07	46.1	7.16	53.5	8.33	57.2	8.94	61.0	9.56	68.4	10.8	75.9	12.2
		21	38.6	6.12	46.1	7.23	53.5	8.41	57.2	9.02	61.0	9.65	68.4	11.0	75.9	12.3
		23	38.6	6.22	46.1	7.35	53.5	8.56	57.2	9.19	61.0	9.84	68.4	11.4	75.9	13.1
		25	38.6	6.32	46.1	7.49	53.5	8.90	57.2	9.66	61.0	10.5	68.4	12.1	75.9	14.0
		27	38.6	6.55	46.1	7.94	53.5	9.47	57.2	10.3	61.0	11.1	68.4	13.0	75.9	14.9
		29	38.6	6.94	46.1	8.43	53.5	10.1	57.2	10.9	61.0	11.9	68.4	13.8	75.9	15.9
		31	38.6	7.35	46.1	8.94	53.5	10.7	57.2	11.6	61.0	12.6	68.4	14.7	75.9	16.9
		33	38.6	7.77	46.1	9.47	53.5	11.3	57.2	12.4	61.0	13.4	68.4	15.6	75.9	18.0
		35	38.6	8.22	46.1	10.0	53.5	12.0	57.2	13.1	61.0	14.2	68.4	16.6	75.9	19.2
		37	38.6	8.69	46.1	10.6	53.5	12.8	57.2	13.9	61.0	15.1	68.4	17.7	75.9	20.4
		39	38.6	9.18	46.1	11.2	53.5	13.5	57.2	14.8	61.0	16.0	68.4	18.8	75.9	21.7
50	425	10	32.2	4.84	38.4	5.60	44.6	6.41	47.7	6.83	50.8	7.27	57.0	8.16	63.2	9.09
	(47.70)	12	32.2	4.90	38.4	5.68	44.6	6.51	47.7	6.94	50.8	7.38	57.0	8.30	63.2	9.25
		14	32.2	4.97	38.4	5.77	44.6	6.61	47.7	7.05	50.8	7.50	57.0	8.44	63.2	9.41
		16	32.2	5.04	38.4	5.85	44.6	6.72	47.7	7.17	50.8	7.63	57.0	8.59	63.2	9.58
		18	32.2	5.11	38.4	5.94	44.6	6.83	47.7	7.29	50.8	7.76	57.0	8.74	63.2	9.76
		20	32.2	5.18	38.4	6.03	44.6	6.94	47.7	7.41	50.8	7.90	57.0	8.90	63.2	9.94
		21	32.2	5.22	38.4	6.08	44.6	7.00	47.7	7.48	50.8	7.97	57.0	8.98	63.2	10.0
		23	32.2	5.30	38.4	6.18	44.6	7.12	47.7	7.61	50.8	8.11	57.0	9.15	63.2	10.3
		25	32.2	5.38	38.4	6.28	44.6	7.25	47.7	7.77	50.8	8.36	57.0	9.61	63.2	11.0
		27	32.2	5.46	38.4	6.51	44.6	7.65	47.7	8.26	50.8	8.89	57.0	10.2	63.2	11.7
		29	32.2	5.78	38.4	6.90	44.6	8.12	47.7	8.77	50.8	9.45	57.0	10.9	63.2	12.4
		31	32.2	6.11	38.4	7.30	44.6	8.61	47.7	9.31	50.8	10.0	57.0	11.6	63.2	13.2
		33	32.2	6.45	38.4	7.72	44.6	9.12	47.7	9.87	50.8	10.6	57.0	12.3	63.2	14.1
		35	32.2	6.80	38.4	8.16	44.6	9.66	47.7	10.5	50.8	11.3	57.0	13.0	63.2	14.9
		37	32.2	7.18	38.4	8.63	44.6	10.2	47.7	11.1	50.8	12.0	57.0	13.8	63.2	15.9
		39	32.2	7.57	38.4	9.11	44.6	10.8	47.7	11.7	50.8	12.7	57.0	14.7	63.2	16.8

4TW31482-1A

4 Capacity tables

4 - 2 Cooling capacity tables

REYQ36P9

TC: Total Capacity: kW ; PI: Power Input: kW (compressor + outdoor fan motor)

Combination (%)	Capacity index (kW)	Outdoor air temp. (°CDB)	Indoor air temperature: 14.0 °CWB 20.0 °CDB TC kW	14.0 °CWB 20.0 °CDB PI kW	16.0 °CWB 23.0 °CDB TC kW	16.0 °CWB 23.0 °CDB PI kW	18.0 °CWB 26.0 °CDB TC kW	18.0 °CWB 26.0 °CDB PI kW	19.0 °CWB 27.0 °CDB TC kW	19.0 °CWB 27.0 °CDB PI kW	20.0 °CWB 28.0 °CDB TC kW	20.0 °CWB 28.0 °CDB PI kW	22.0 °CWB 30.0 °CDB TC kW	22.0 °CWB 30.0 °CDB PI kW	24.0 °CWB 32.0 °CDB TC kW	24.0 °CWB 32.0 °CDB PI kW
130	1170 (131.30)	10	88.6	13.4	106	16.4	123	19.5	127	19.5	129	19.5	132	19.5	135	19.5
		12	88.6	13.6	106	16.7	123	19.9	125	19.9	127	19.9	130	19.9	133	19.9
		14	88.6	13.9	106	17.0	122	20.1	124	20.1	125	20.1	129	20.1	132	20.1
		16	88.6	14.2	106	17.4	121	20.0	122	20.1	124	20.1	127	20.1	130	20.1
		18	88.6	14.4	106	17.7	119	20.8	121	20.9	122	21.0	125	21.2	129	21.4
		20	88.6	14.7	106	18.9	117	21.8	119	21.9	120	22.0	124	22.2	127	22.4
		21	88.6	15.2	106	19.5	116	22.3	118	22.4	120	22.5	123	22.7	126	23.0
		23	88.6	16.2	106	20.9	115	23.3	116	23.4	118	23.5	121	23.8	124	24.0
		25	88.6	17.3	106	22.4	113	24.3	115	24.4	116	24.6	120	24.8	123	25.1
		27	88.6	18.5	106	24.0	112	25.3	113	25.5	115	25.6	118	25.9	121	26.2
		29	88.6	19.8	106	25.6	110	26.4	112	26.5	113	26.7	116	26.9	120	27.2
		31	88.6	21.1	105	27.1	108	27.4	110	27.6	111	27.7	115	28.0	118	28.3
		33	88.6	22.5	103	28.1	107	28.4	108	28.6	110	28.8	113	29.1	116	29.4
		35	88.6	23.9	102	29.2	105	29.5	107	29.7	108	29.8	111	30.2	115	30.5
		37	88.6	25.5	100	30.2	103	30.5	105	30.7	107	30.9	110	31.2	113	31.6
		39	88.6	27.1	98.5	31.2	102	31.6	103	31.8	105	32.0	108	32.3	111	32.7
120	1080 (121.20)	10	81.8	12.2	97.6	15.0	113	17.8	121	19.2	127	19.2	130	19.2	133	19.2
		12	81.8	12.5	97.6	15.2	113	18.1	121	19.6	125	19.6	128	19.6	131	19.6
		14	81.8	12.7	97.6	15.5	113	18.5	121	20.0	123	20.0	126	20.0	129	20.0
		16	81.8	12.9	97.6	15.8	113	18.8	120	20.1	122	20.1	125	20.1	128	20.1
		18	81.8	13.2	97.6	16.1	113	19.5	119	20.8	120	20.8	123	21.0	126	21.2
		20	81.8	13.5	97.6	16.8	113	20.9	117	21.8	118	21.9	121	22.1	124	22.3
		21	81.8	13.6	97.6	17.4	113	21.7	116	22.3	118	22.4	121	22.6	124	22.8
		23	81.8	14.5	97.6	18.6	113	23.2	115	23.3	116	23.4	119	23.6	122	23.8
		25	81.8	15.5	97.6	19.9	111	24.2	113	24.3	114	24.4	117	24.7	120	24.9
		27	81.8	16.5	97.6	21.3	110	25.2	111	25.3	113	25.4	116	25.7	119	25.9
		29	81.8	17.7	97.6	22.8	108	26.2	110	26.3	111	26.5	114	26.7	117	27.0
		31	81.8	18.8	97.6	24.3	107	27.2	108	27.4	109	27.5	112	27.8	115	28.1
		33	81.8	20.0	97.6	25.9	105	28.3	106	28.4	108	28.6	111	28.9	114	29.1
		35	81.8	21.3	97.6	27.6	103	29.3	105	29.5	106	29.6	109	29.9	112	30.2
		37	81.8	22.7	97.6	29.4	102	30.3	103	30.5	105	30.7	107	31.0	110	31.3
		39	81.8	24.2	97.0	31.0	99.9	31.4	101	31.6	103	31.7	106	32.1	109	32.4
110	990 (111.10)	10	75.0	11.1	89.4	13.5	104	16.1	111	17.4	118	18.7	127	19.1	130	19.1
		12	75.0	11.3	89.4	13.8	104	16.4	111	17.7	118	19.0	126	19.5	128	19.5
		14	75.0	11.5	89.4	14.1	104	16.7	111	18.0	118	19.4	124	19.9	127	19.9
		16	75.0	11.7	89.4	14.3	104	17.0	111	18.4	118	19.8	122	20.1	125	20.1
		18	75.0	12.0	89.4	14.6	104	17.4	111	18.9	118	20.7	121	20.9	124	21.1
		20	75.0	12.2	89.4	14.9	104	18.4	111	20.3	116	21.7	119	21.9	122	22.1
		21	75.0	12.3	89.4	15.3	104	19.0	111	21.1	116	22.2	118	22.4	121	22.6
		23	75.0	12.9	89.4	16.4	104	20.4	111	22.6	114	23.2	117	23.4	119	23.6
		25	75.0	13.8	89.4	17.6	104	21.9	111	24.2	112	24.3	115	24.5	118	24.7
		27	75.0	14.7	89.4	18.8	104	23.4	109	25.2	111	25.3	113	25.5	116	25.7
		29	75.0	15.7	89.4	20.0	104	25.0	108	26.2	109	26.3	112	26.5	114	26.8
		31	75.0	16.7	89.4	21.4	104	26.7	106	27.2	107	27.3	110	27.6	113	27.8
		33	75.0	17.7	89.4	22.8	103	28.1	104	28.2	106	28.4	109	28.6	111	28.9
		35	75.0	18.9	89.4	24.3	101	29.1	103	29.3	104	29.4	107	29.7	110	30.0
		37	75.0	20.1	89.4	25.8	99.8	30.1	101	30.3	103	30.4	105	30.7	108	31.0
		39	75.0	21.3	89.4	27.5	98.2	31.2	99.5	31.3	101	31.5	104	31.8	106	32.1
100	101.00 (900)	10	68.2	10.0	81.3	12.2	94.4	14.4	101	15.6	108	16.7	121	19.1	128	19.1
		12	68.2	10.2	81.3	12.4	94.4	14.7	101	15.9	108	17.1	121	19.5	126	19.5
		14	68.2	10.4	81.3	12.6	94.4	15.0	101	16.2	108	17.4	121	19.9	124	19.9
		16	68.2	10.6	81.3	12.9	94.4	15.2	101	16.5	108	17.7	120	20.1	123	20.1
		18	68.2	10.8	81.3	13.1	94.4	15.5	101	16.8	108	18.1	119	20.7	121	20.9
		20	68.2	11.0	81.3	13.4	94.4	16.0	101	17.6	108	19.4	117	21.8	119	21.9
		21	68.2	11.1	81.3	13.5	94.4	16.6	101	18.3	108	20.1	116	22.3	119	22.4
		23	68.2	11.4	81.3	14.4	94.4	17.8	101	19.6	108	21.5	114	23.3	117	23.5
		25	68.2	12.1	81.3	15.4	94.4	19.0	101	21.0	108	23.0	113	24.3	115	24.5
		27	68.2	12.9	81.3	16.4	94.4	20.3	101	22.4	108	24.6	111	25.3	114	25.5
		29	68.2	13.8	81.3	17.5	94.4	21.7	101	24.0	107	26.1	110	26.3	112	26.6
		31	68.2	14.7	81.3	18.7	94.4	23.1	101	25.6	105	27.1	108	27.4	110	27.6
		33	68.2	15.6	81.3	19.9	94.4	24.7	101	27.3	104	28.2	106	28.4	109	28.6
		35	68.2	16.6	81.3	21.1	94.4	26.3	101	29.1	102	29.2	105	29.4	107	29.7
		37	68.2	17.6	81.3	22.5	94.4	28.0	99.3	30.1	101	30.2	103	30.5	105	30.8
		39	68.2	18.7	81.3	23.9	94.4	29.9	97.6	31.1	98.9	31.3	101	31.5	104	31.8

4TW31482-1A

NOTES - ANMERKUNGEN - Σημειώσεις - NOTAS - REMARQUES - NOTE - OPMERKINGEN - примечания - NOTLAR

1 The above table shows the average value of conditions which may occur.
Die obige Tabelle zeigt den Durchschnittswert der Bedingungen, die auftreten können.
Στον παραπάνω πίνακα αναγράφεται η μέση τιμή για συνθήκες που μπορεί να προκύψουν.
La tabla de arriba muestra el valor medio de condiciones que pueden ocurrir.
Le tableau ci-dessus donne la valeur moyenne pour des conditions qui peuvent survenir.
La tabella in alto mostra il valore delle condizioni medie che si possono riscontrare.
De tabel hierboven geeft de gemiddelde waarde aan van situaties die kunnen voorvallen.
Таблица расположенная выше показывает среднее значение условий, которые могут наступить.
Yukarıdaki tablo meydana gelebilecek koşulların ortalama değerini göstermektedir.

4 Capacity tables

4 - 2 Cooling capacity tables

REYQ36P9

TC: Total Capacity: kW ; PI: Power Input: kW (compressor + outdoor fan motor)

Combination (%)	Capacity index (kW)	Outdoor air temp. (°CDB)	Indoor air temperature: 14.0 °CWB / 20.0 °CDB TC kW	14.0 °CWB / 20.0 °CDB PI kW	16.0 °CWB / 23.0 °CDB TC kW	16.0 °CWB / 23.0 °CDB PI kW	18.0 °CWB / 26.0 °CDB TC kW	18.0 °CWB / 26.0 °CDB PI kW	19.0 °CWB / 27.0 °CDB TC kW	19.0 °CWB / 27.0 °CDB PI kW	20.0 °CWB / 28.0 °CDB TC kW	20.0 °CWB / 28.0 °CDB PI kW	22.0 °CWB / 30.0 °CDB TC kW	22.0 °CWB / 30.0 °CDB PI kW	24.0 °CWB / 32.0 °CDB TC kW	24.0 °CWB / 32.0 °CDB PI kW
90	810	10	61.3	8.98	73.2	10.8	85.0	12.8	90.9	13.8	96.8	14.8	109	16.9	120	19.1
	(90.90)	12	61.3	9.13	73.2	11.0	85.0	13.0	90.9	14.0	96.8	15.1	109	17.3	120	19.4
		14	61.3	9.28	73.2	11.2	85.0	13.3	90.9	14.3	96.8	15.4	109	17.6	120	19.8
		16	61.3	9.45	73.2	11.4	85.0	13.5	90.9	14.6	96.8	15.7	109	17.9	120	20.1
		18	61.3	9.62	73.2	11.6	85.0	13.8	90.9	14.9	96.8	16.0	109	18.3	119	20.7
		20	61.3	9.80	73.2	11.9	85.0	14.1	90.9	15.2	96.8	16.6	109	19.6	117	21.8
		21	61.3	9.89	73.2	12.0	85.0	14.3	90.9	15.7	96.8	17.2	109	20.4	116	22.3
		23	61.3	10.1	73.2	12.5	85.0	15.3	90.9	16.8	96.8	18.4	109	21.8	114	23.3
		25	61.3	10.6	73.2	13.3	85.0	16.4	90.9	18.0	96.8	19.7	109	23.4	113	24.3
		27	61.3	11.3	73.2	14.2	85.0	17.5	90.9	19.2	96.8	21.1	109	25.0	111	25.3
		29	61.3	12.0	73.2	15.1	85.0	18.6	90.9	20.5	96.8	22.5	107	26.1	109	26.3
		31	61.3	12.8	73.2	16.1	85.0	19.9	90.9	21.9	96.8	24.0	106	27.2	108	27.4
		33	61.3	13.6	73.2	17.2	85.0	21.2	90.9	23.3	96.8	25.6	104	28.2	106	28.4
		35	61.3	14.4	73.2	18.2	85.0	22.5	90.9	24.9	96.8	27.3	102	29.2	105	29.4
		37	61.3	15.3	73.2	19.4	85.0	24.0	90.9	26.5	96.8	29.1	101	30.2	103	30.5
		39	61.3	16.2	73.2	20.6	85.0	25.5	90.9	28.2	96.8	31.0	99.1	31.3	101	31.5
80	720	10	54.5	7.97	65.0	9.54	75.5	11.2	80.8	12.1	86.1	13.0	96.6	14.8	107	16.7
	(80.80)	12	54.5	8.10	65.0	9.70	75.5	11.4	80.8	12.3	86.1	13.2	96.6	15.1	107	17.0
		14	54.5	8.23	65.0	9.88	75.5	11.6	80.8	12.5	86.1	13.4	96.6	15.3	107	17.3
		16	54.5	8.37	65.0	10.1	75.5	11.8	80.8	12.8	86.1	13.7	96.6	15.6	107	17.6
		18	54.5	8.51	65.0	10.2	75.5	12.1	80.8	13.0	86.1	14.0	96.6	16.0	107	18.0
		20	54.5	8.66	65.0	10.4	75.5	12.3	80.8	13.3	86.1	14.3	96.6	16.5	107	19.2
		21	54.5	8.74	65.0	10.5	75.5	12.4	80.8	13.4	86.1	14.5	96.6	17.1	107	19.9
		23	54.5	8.90	65.0	10.7	75.5	13.0	80.8	14.3	86.1	15.6	96.6	18.3	107	21.4
		25	54.5	9.19	65.0	11.4	75.5	13.9	80.8	15.2	86.1	16.6	96.6	19.6	107	22.9
		27	54.5	9.78	65.0	12.2	75.5	14.8	80.8	16.3	86.1	17.8	96.6	21.0	107	24.5
		29	54.5	10.4	65.0	13.0	75.5	15.8	80.8	17.4	86.1	19.0	96.6	22.4	107	26.1
		31	54.5	11.0	65.0	13.8	75.5	16.8	80.8	18.5	86.1	20.2	96.6	23.9	105	27.1
		33	54.5	11.7	65.0	14.6	75.5	17.9	80.8	19.7	86.1	21.5	96.6	25.5	104	28.2
		35	54.5	12.4	65.0	15.6	75.5	19.1	80.8	21.0	86.1	22.9	96.6	27.2	102	29.2
		37	54.5	13.2	65.0	16.5	75.5	20.3	80.8	22.3	86.1	24.4	96.6	29.0	100	30.2
		39	54.5	13.9	65.0	17.5	75.5	21.6	80.8	23.7	86.1	26.0	96.6	30.9	98.8	31.2
70	630	10	47.7	7.01	56.9	8.31	66.1	9.71	70.7	10.4	75.3	11.2	84.5	12.7	93.7	14.3
	(70.70)	12	47.7	7.11	56.9	8.45	66.1	9.87	70.7	10.6	75.3	11.4	84.5	12.9	93.7	14.5
		14	47.7	7.22	56.9	8.59	66.1	10.0	70.7	10.8	75.3	11.6	84.5	13.2	93.7	14.8
		16	47.7	7.34	56.9	8.74	66.1	10.2	70.7	11.0	75.3	11.8	84.5	13.4	93.7	15.1
		18	47.7	7.46	56.9	8.89	66.1	10.4	70.7	11.2	75.3	12.0	84.5	13.7	93.7	15.4
		20	47.7	7.59	56.9	9.05	66.1	10.6	70.7	11.4	75.3	12.3	84.5	14.0	93.7	15.8
		21	47.7	7.65	56.9	9.14	66.1	10.7	70.7	11.5	75.3	12.4	84.5	14.2	93.7	16.4
		23	47.7	7.78	56.9	9.31	66.1	10.9	70.7	11.9	75.3	13.0	84.5	15.2	93.7	17.6
		25	47.7	7.92	56.9	9.68	66.1	11.7	70.7	12.7	75.3	13.8	84.5	16.2	93.7	18.8
		27	47.7	8.37	56.9	10.3	66.1	12.4	70.7	13.6	75.3	14.8	84.5	17.3	93.7	20.1
		29	47.7	8.89	56.9	10.9	66.1	13.2	70.7	14.5	75.3	15.7	84.5	18.5	93.7	21.4
		31	47.7	9.42	56.9	11.6	66.1	14.1	70.7	15.4	75.3	16.8	84.5	19.7	93.7	22.9
		33	47.7	9.99	56.9	12.3	66.1	15.0	70.7	16.4	75.3	17.8	84.5	21.0	93.7	24.4
		35	47.7	10.6	56.9	13.1	66.1	15.9	70.7	17.4	75.3	19.0	84.5	22.3	93.7	26.0
		37	47.7	11.2	56.9	13.9	66.1	16.9	70.7	18.5	75.3	20.2	84.5	23.8	93.7	27.7
		39	47.7	11.8	56.9	14.7	66.1	17.9	70.7	19.7	75.3	21.5	84.5	25.3	93.7	29.5
60	540	10	40.9	6.09	48.8	7.15	56.7	8.28	60.6	8.86	64.5	9.46	72.4	10.7	80.3	12.0
	(60.60)	12	40.9	6.18	48.8	7.26	56.7	8.41	60.6	9.01	64.5	9.63	72.4	10.9	80.3	12.2
		14	40.9	6.27	48.8	7.38	56.7	8.55	60.6	9.17	64.5	9.79	72.4	11.1	80.3	12.4
		16	40.9	6.36	48.8	7.50	56.7	8.70	60.6	9.33	64.5	9.97	72.4	11.3	80.3	12.7
		18	40.9	6.46	48.8	7.62	56.7	8.85	60.6	9.50	64.5	10.2	72.4	11.5	80.3	12.9
		20	40.9	6.56	48.8	7.75	56.7	9.01	60.6	9.67	64.5	10.3	72.4	11.7	80.3	13.2
		21	40.9	6.62	48.8	7.82	56.7	9.09	60.6	9.76	64.5	10.4	72.4	11.8	80.3	13.3
		23	40.9	6.72	48.8	7.95	56.7	9.26	60.6	9.95	64.5	10.6	72.4	12.3	80.3	14.1
		25	40.9	6.84	48.8	8.10	56.7	9.63	60.6	10.5	64.5	11.3	72.4	13.1	80.3	15.1
		27	40.9	7.08	48.8	8.59	56.7	10.2	60.6	11.1	64.5	12.1	72.4	14.0	80.3	16.1
		29	40.9	7.51	48.8	9.11	56.7	10.9	60.6	11.8	64.5	12.8	72.4	14.9	80.3	17.2
		31	40.9	7.95	48.8	9.67	56.7	11.6	60.6	12.6	64.5	13.6	72.4	15.9	80.3	18.3
		33	40.9	8.41	48.8	10.2	56.7	12.3	60.6	13.4	64.5	14.5	72.4	16.9	80.3	19.5
		35	40.9	8.89	48.8	10.9	56.7	13.0	60.6	14.2	64.5	15.4	72.4	18.0	80.3	20.8
		37	40.9	9.40	48.8	11.5	56.7	13.8	60.6	15.1	64.5	16.4	72.4	19.1	80.3	22.1
		39	40.9	9.93	48.8	12.2	56.7	14.6	60.6	16.0	64.5	17.4	72.4	20.3	80.3	23.5
50	450	10	34.1	5.24	40.6	6.06	47.2	6.94	50.5	7.39	53.8	7.86	60.4	8.83	66.9	9.83
	(50.50)	12	34.1	5.31	40.6	6.15	47.2	7.04	50.5	7.51	53.8	7.99	60.4	8.97	66.9	10.0
		14	34.1	5.38	40.6	6.24	47.2	7.15	50.5	7.63	53.8	8.12	60.4	9.13	66.9	10.2
		16	34.1	5.45	40.6	6.33	47.2	7.27	50.5	7.75	53.8	8.25	60.4	9.29	66.9	10.4
		18	34.1	5.52	40.6	6.43	47.2	7.39	50.5	7.88	53.8	8.40	60.4	9.45	66.9	10.6
		20	34.1	5.60	40.6	6.53	47.2	7.51	50.5	8.02	53.8	8.54	60.4	9.63	66.9	10.8
		21	34.1	5.64	40.6	6.58	47.2	7.57	50.5	8.09	53.8	8.62	60.4	9.72	66.9	10.9
		23	34.1	5.73	40.6	6.69	47.2	7.70	50.5	8.23	53.8	8.78	60.4	9.90	66.9	11.1
		25	34.1	5.82	40.6	6.80	47.2	7.84	50.5	8.41	53.8	9.05	60.4	10.4	66.9	11.8
		27	34.1	5.91	40.6	7.04	47.2	8.28	50.5	8.93	53.8	9.62	60.4	11.1	66.9	12.6
		29	34.1	6.25	40.6	7.46	47.2	8.78	50.5	9.49	53.8	10.2	60.4	11.8	66.9	13.4
		31	34.1	6.61	40.6	7.90	47.2	9.31	50.5	10.1	53.8	10.9	60.4	12.5	66.9	14.3
		33	34.1	6.98	40.6	8.35	47.2	9.87	50.5	10.7	53.8	11.5	60.4	13.3	66.9	15.2
		35	34.1	7.36	40.6	8.83	47.2	10.4	50.5	11.3	53.8	12.2	60.4	14.1	66.9	16.2
		37	34.1	7.76	40.6	9.33	47.2	11.1	50.5	12.0	53.8	12.9	60.4	15.0	66.9	17.2
		39	34.1	8.19	40.6	9.86	47.2	11.7	50.5	12.7	53.8	13.7	60.4	15.9	66.9	18.2

4TW31482-1A

4 Capacity tables

4 - 2 Cooling capacity tables

REYQ38P8

TC: Total Capacity: kW ; PI: Power Input: kW (compressor + outdoor fan motor)

Combination (%)	Capacity index (kW)	Outdoor air temp. (°CDB)	Indoor air temperature: 14.0 °CWB 20.0 °CDB TC kW	14.0 °CWB 20.0 °CDB PI kW	16.0 °CWB 23.0 °CDB TC kW	16.0 °CWB 23.0 °CDB PI kW	18.0 °CWB 26.0 °CDB TC kW	18.0 °CWB 26.0 °CDB PI kW	19.0 °CWB 27.0 °CDB TC kW	19.0 °CWB 27.0 °CDB PI kW	20.0 °CWB 28.0 °CDB TC kW	20.0 °CWB 28.0 °CDB PI kW	22.0 °CWB 30.0 °CDB TC kW	22.0 °CWB 30.0 °CDB PI kW	24.0 °CWB 32.0 °CDB TC kW	24.0 °CWB 32.0 °CDB PI kW
130	1235 (139.10)	10	93.9	14.4	112	17.6	130	20.9	135	20.9	136	20.9	140	20.9	143	20.9
		12	93.9	14.6	112	17.9	130	21.3	133	21.3	135	21.3	138	21.3	141	21.3
		14	93.9	14.9	112	18.3	130	21.6	131	21.6	133	21.6	136	21.6	140	21.6
		16	93.9	15.2	112	18.6	128	21.5	130	21.6	131	21.6	135	21.6	138	21.6
		18	93.9	15.5	112	19.0	126	22.3	128	22.4	129	22.5	133	22.7	136	23.0
		20	93.9	15.8	112	20.2	124	23.4	126	23.5	128	23.6	131	23.9	135	24.1
		21	93.9	16.2	112	21.0	123	23.9	125	24.1	127	24.2	130	24.4	134	24.7
		23	93.9	17.4	112	22.5	122	25.0	123	25.1	125	25.3	129	25.5	132	25.8
		25	93.9	18.6	112	24.1	120	26.1	122	26.3	123	26.4	127	26.7	130	26.9
		27	93.9	19.9	112	25.7	118	27.2	120	27.4	122	27.5	125	27.8	128	28.1
		29	93.9	21.2	112	27.5	117	28.3	118	28.5	120	28.6	123	28.9	127	29.2
		31	93.9	22.6	111	29.1	115	29.4	116	29.6	118	29.7	122	30.1	125	30.4
		33	93.9	24.1	110	30.2	113	30.5	115	30.7	116	30.9	120	31.2	123	31.6
		35	93.9	25.7	108	31.3	111	31.7	113	31.8	115	32.0	118	32.4	121	32.7
		37	93.9	27.3	106	32.4	110	32.8	111	33.0	113	33.2	116	33.5	120	33.9
		39	93.9	29.1	104	33.5	108	33.9	110	34.1	111	34.3	115	34.7	118	35.1
120	1140 (128.40)	10	86.7	13.1	103	16.0	120	19.1	128	20.6	134	20.6	137	20.6	141	20.6
		12	86.7	13.4	103	16.3	120	19.4	128	21.0	133	21.0	136	21.0	139	21.0
		14	86.7	13.6	103	16.6	120	19.8	128	21.4	131	21.4	134	21.4	137	21.4
		16	86.7	13.9	103	17.0	120	20.2	128	21.6	129	21.6	132	21.6	135	21.6
		18	86.7	14.1	103	17.3	120	20.9	126	22.3	127	22.4	130	22.6	134	22.8
		20	86.7	14.4	103	18.0	120	22.4	124	23.4	126	23.5	129	23.7	132	23.9
		21	86.7	14.6	103	18.6	120	23.3	123	23.9	125	24.0	128	24.2	131	24.5
		23	86.7	15.6	103	20.0	120	24.9	121	25.0	123	25.1	126	25.4	129	25.6
		25	86.7	16.6	103	21.4	118	26.0	120	26.1	121	26.2	124	26.5	128	26.7
		27	86.7	17.7	103	22.8	116	27.1	118	27.2	120	27.3	123	27.6	126	27.9
		29	86.7	18.9	103	24.4	115	28.2	116	28.3	118	28.4	121	28.7	124	29.0
		31	86.7	20.2	103	26.0	113	29.2	114	29.4	116	29.5	119	29.8	122	30.1
		33	86.7	21.5	103	27.8	111	30.4	113	30.5	114	30.7	117	31.0	121	31.3
		35	86.7	22.9	103	29.6	109	31.5	111	31.6	113	31.8	116	32.1	119	32.5
		37	86.7	24.3	103	31.6	108	32.6	109	32.7	111	32.9	114	33.3	117	33.6
		39	86.7	25.9	103	33.3	106	33.7	108	33.9	109	34.1	112	34.4	115	34.8
110	1045 (117.70)	10	79.4	11.9	94.7	14.5	110	17.2	118	18.6	125	20.0	135	20.5	138	20.5
		12	79.4	12.1	94.7	14.8	110	17.6	118	19.0	125	20.4	133	20.9	136	20.9
		14	79.4	12.4	94.7	15.1	110	17.9	118	19.4	125	20.8	132	21.3	134	21.3
		16	79.4	12.6	94.7	15.4	110	18.2	118	19.7	125	21.2	130	21.6	133	21.6
		18	79.4	12.8	94.7	15.7	110	18.6	118	20.3	125	22.2	128	22.4	131	22.6
		20	79.4	13.1	94.7	16.0	110	19.7	118	21.8	123	23.3	126	23.5	129	23.7
		21	79.4	13.2	94.7	16.5	110	20.4	118	22.6	123	23.9	125	24.1	128	24.3
		23	79.4	13.8	94.7	17.6	110	21.9	118	24.2	121	25.0	124	25.2	127	25.4
		25	79.4	14.8	94.7	18.8	110	23.4	118	25.9	119	26.0	122	26.3	125	26.5
		27	79.4	15.7	94.7	20.1	110	25.1	116	27.0	117	27.1	120	27.4	123	27.6
		29	79.4	16.8	94.7	21.5	110	26.8	114	28.1	116	28.2	119	28.5	121	28.8
		31	79.4	17.9	94.7	22.9	110	28.6	112	29.2	114	29.3	117	29.6	120	29.9
		33	79.4	19.0	94.7	24.4	109	30.2	111	30.3	112	30.5	115	30.7	118	31.0
		35	79.4	20.2	94.7	26.0	108	31.3	109	31.4	110	31.6	113	31.9	116	32.2
		37	79.4	21.5	94.7	27.7	106	32.4	107	32.5	109	32.7	112	33.0	114	33.3
		39	79.4	22.9	94.7	29.5	104	33.5	106	33.6	107	33.8	110	34.1	113	34.5
100	950 (107.00)	10	72.2	10.8	86.1	13.0	100	15.4	107	16.7	114	17.9	128	20.5	135	20.5
		12	72.2	10.9	86.1	13.3	100	15.7	107	17.0	114	18.3	128	20.9	134	20.9
		14	72.2	11.1	86.1	13.5	100	16.0	107	17.3	114	18.6	128	21.3	132	21.3
		16	72.2	11.3	86.1	13.8	100	16.3	107	17.7	114	19.0	127	21.6	130	21.6
		18	72.2	11.5	86.1	14.0	100	16.7	107	18.0	114	19.4	126	22.3	128	22.4
		20	72.2	11.8	86.1	14.3	100	17.2	107	18.9	114	20.8	124	23.4	127	23.5
		21	72.2	11.9	86.1	14.5	100	17.8	107	19.6	114	21.5	123	23.9	126	24.1
		23	72.2	12.2	86.1	15.4	100	19.0	107	21.0	114	23.1	121	25.0	124	25.2
		25	72.2	13.0	86.1	16.5	100	20.4	107	22.5	114	24.7	120	26.1	122	26.3
		27	72.2	13.9	86.1	17.6	100	21.8	107	24.0	114	26.4	118	27.2	120	27.4
		29	72.2	14.8	86.1	18.8	100	23.3	107	25.7	114	28.0	116	28.3	119	28.5
		31	72.2	15.7	86.1	20.0	100	24.8	107	27.4	112	29.1	114	29.4	117	29.6
		33	72.2	16.7	86.1	21.3	100	26.5	107	29.3	110	30.2	113	30.5	115	30.8
		35	72.2	17.8	86.1	22.7	100	28.2	107	31.2	108	31.3	111	31.6	114	31.9
		37	72.2	18.9	86.1	24.1	100	30.0	105	32.3	107	32.4	109	32.7	112	33.0
		39	72.2	20.0	86.1	25.7	100	32.0	104	33.4	105	33.6	107	33.9	110	34.2

4TW31482-1A

NOTES - ANMERKUNGEN - Σημειώσεις - NOTAS - REMARQUES - NOTE - OPMERKINGEN - примечания - NOTLAR

1 The above table shows the average value of conditions which may occur.
Die obige Tabelle zeigt den Durchschnittswert der Bedingungen, die auftreten können.
Στον παραπάνω πίνακα αναγράφεται η μέση τιμή για συνθήκες που μπορεί να προκύψουν.
La tabla de arriba muestra el valor medio de condiciones que pueden ocurrir.
Le tableau ci-dessus donne la valeur moyenne pour des conditions qui peuvent survenir.
La tabella in alto mostra il valore delle condizioni medie che si possono riscontrare.
De tabel hierboven geeft de gemiddelde waarde aan van situaties die kunnen voorvallen.
Таблица расположенная выше показывает среднее значение условий, которые могут наступить.
Yukarıdaki tablo meydana gelebilecek koşulların ortalama değerini göstermektedir.

4 Capacity tables

4 - 2 Cooling capacity tables

REYQ38P8

TC: Total Capacity: kW ; PI: Power Input: kW (compressor + outdoor fan motor)

Combination (%)	Capacity index (kW)	Outdoor air temp. (°CDB)	Indoor air temperature: 14.0 °CWB / 20.0 °CDB		16.0 °CWB / 23.0 °CDB		18.0 °CWB / 26.0 °CDB		19.0 °CWB / 27.0 °CDB		20.0 °CWB / 28.0 °CDB		22.0 °CWB / 30.0 °CDB		24.0 °CWB / 32.0 °CDB	
			TC	PI	TC	PI	TC	PI	TC	PI	TC	PI	TC	PI	TC	PI
			kW	kW	kW	kW	kW	kW	kW	kW	kW	kW	kW	kW	kW	kW
90	855 (96.30)	10	65.0	9.62	77.5	11.6	90.0	13.7	96.3	14.8	103	15.9	115	18.2	128	20.5
		12	65.0	9.79	77.5	11.8	90.0	14.0	96.3	15.1	103	16.2	115	18.5	128	20.8
		14	65.0	9.95	77.5	12.0	90.0	14.2	96.3	15.3	103	16.5	115	18.9	128	21.2
		16	65.0	10.1	77.5	12.3	90.0	14.5	96.3	15.6	103	16.8	115	19.2	127	21.6
		18	65.0	10.3	77.5	12.5	90.0	14.8	96.3	16.0	103	17.2	115	19.6	126	22.3
		20	65.0	10.5	77.5	12.7	90.0	15.1	96.3	16.3	103	17.8	115	21.1	124	23.4
		21	65.0	10.6	77.5	12.8	90.0	15.3	96.3	16.8	103	18.4	115	21.8	123	23.9
		23	65.0	10.8	77.5	13.4	90.0	16.4	96.3	18.0	103	19.7	115	23.4	121	25.0
		25	65.0	11.4	77.5	14.3	90.0	17.5	96.3	19.3	103	21.1	115	25.1	120	26.1
		27	65.0	12.1	77.5	15.2	90.0	18.7	96.3	20.6	103	22.6	115	26.8	118	27.2
		29	65.0	12.9	77.5	16.2	90.0	20.0	96.3	22.0	103	24.1	114	28.1	116	28.3
		31	65.0	13.7	77.5	17.3	90.0	21.3	96.3	23.5	103	25.7	112	29.2	114	29.4
		33	65.0	14.6	77.5	18.4	90.0	22.7	96.3	25.0	103	27.5	110	30.3	113	30.5
		35	65.0	15.5	77.5	19.6	90.0	24.2	96.3	26.7	103	29.3	109	31.4	111	31.6
		37	65.0	16.4	77.5	20.8	90.0	25.7	96.3	28.4	103	31.2	107	32.5	109	32.7
		39	65.0	17.4	77.5	22.1	90.0	27.4	96.3	30.2	103	33.2	105	33.6	107	33.9
80	760 (85.60)	10	57.8	8.54	68.9	10.2	80.0	12.0	85.6	12.9	91.2	13.9	102	15.8	113	17.9
		12	57.8	8.68	68.9	10.4	80.0	12.2	85.6	13.2	91.2	14.2	102	16.1	113	18.2
		14	57.8	8.82	68.9	10.6	80.0	12.5	85.6	13.4	91.2	14.4	102	16.5	113	18.5
		16	57.8	8.97	68.9	10.8	80.0	12.7	85.6	13.7	91.2	14.7	102	16.8	113	18.9
		18	57.8	9.13	68.9	11.0	80.0	12.9	85.6	13.9	91.2	15.0	102	17.1	113	19.3
		20	57.8	9.29	68.9	11.2	80.0	13.2	85.6	14.2	91.2	15.3	102	17.7	113	20.6
		21	57.8	9.37	68.9	11.3	80.0	13.3	85.6	14.4	91.2	15.6	102	18.4	113	21.4
		23	57.8	9.55	68.9	11.5	80.0	14.0	85.6	15.3	91.2	16.7	102	19.7	113	22.9
		25	57.8	9.86	68.9	12.2	80.0	14.9	85.6	16.3	91.2	17.8	102	21.0	113	24.5
		27	57.8	10.5	68.9	13.0	80.0	15.9	85.6	17.4	91.2	19.1	102	22.5	113	26.2
		29	57.8	11.1	68.9	13.9	80.0	17.0	85.6	18.6	91.2	20.3	102	24.0	113	28.0
		31	57.8	11.8	68.9	14.8	80.0	18.1	85.6	19.8	91.2	21.7	102	25.6	112	29.1
		33	57.8	12.6	68.9	15.7	80.0	19.2	85.6	21.1	91.2	23.1	102	27.4	110	30.2
		35	57.8	13.3	68.9	16.7	80.0	20.4	85.6	22.5	91.2	24.6	102	29.2	108	31.3
		37	57.8	14.1	68.9	17.7	80.0	21.7	85.6	23.9	91.2	26.2	102	31.1	106	32.4
		39	57.8	15.0	68.9	18.8	80.0	23.1	85.6	25.4	91.2	27.9	102	33.1	105	33.5
70	665 (74.90)	10	50.5	7.51	60.3	8.91	70.0	10.4	74.9	11.2	79.8	12.0	89.5	13.6	99.3	15.3
		12	50.5	7.63	60.3	9.06	70.0	10.6	74.9	11.4	79.8	12.2	89.5	13.9	99.3	15.6
		14	50.5	7.75	60.3	9.21	70.0	10.8	74.9	11.6	79.8	12.4	89.5	14.1	99.3	15.9
		16	50.5	7.87	60.3	9.37	70.0	11.0	74.9	11.8	79.8	12.6	89.5	14.4	99.3	16.2
		18	50.5	8.00	60.3	9.54	70.0	11.2	74.9	12.0	79.8	12.9	89.5	14.7	99.3	16.5
		20	50.5	8.13	60.3	9.71	70.0	11.4	74.9	12.2	79.8	13.1	89.5	15.0	99.3	17.0
		21	50.5	8.20	60.3	9.80	70.0	11.5	74.9	12.4	79.8	13.3	89.5	15.2	99.3	17.6
		23	50.5	8.35	60.3	9.98	70.0	11.7	74.9	12.8	79.8	13.9	89.5	16.3	99.3	18.8
		25	50.5	8.49	60.3	10.4	70.0	12.5	74.9	13.6	79.8	14.8	89.5	17.4	99.3	20.1
		27	50.5	8.98	60.3	11.0	70.0	13.3	74.9	14.6	79.8	15.8	89.5	18.6	99.3	21.5
		29	50.5	9.53	60.3	11.7	70.0	14.2	74.9	15.5	79.8	16.9	89.5	19.8	99.3	23.0
		31	50.5	10.1	60.3	12.5	70.0	15.1	74.9	16.5	79.8	18.0	89.5	21.1	99.3	24.5
		33	50.5	10.7	60.3	13.2	70.0	16.0	74.9	17.6	79.8	19.1	89.5	22.5	99.3	26.2
		35	50.5	11.3	60.3	14.0	70.0	17.0	74.9	18.7	79.8	20.4	89.5	24.0	99.3	27.9
		37	50.5	12.0	60.3	14.9	70.0	18.1	74.9	19.8	79.8	21.6	89.5	25.5	99.3	29.7
		39	50.5	12.7	60.3	15.8	70.0	19.2	74.9	21.1	79.8	23.0	89.5	27.1	99.3	31.6
60	570 (64.20)	10	43.3	6.53	51.7	7.67	60.0	8.88	64.2	9.50	68.4	10.1	76.7	11.5	85.1	12.9
		12	43.3	6.63	51.7	7.79	60.0	9.02	64.2	9.66	68.4	10.3	76.7	11.7	85.1	13.1
		14	43.3	6.72	51.7	7.91	60.0	9.17	64.2	9.83	68.4	10.5	76.7	11.9	85.1	13.3
		16	43.3	6.82	51.7	8.04	60.0	9.33	64.2	10.0	68.4	10.7	76.7	12.1	85.1	13.6
		18	43.3	6.93	51.7	8.17	60.0	9.49	64.2	10.2	68.4	10.9	76.7	12.3	85.1	13.9
		20	43.3	7.04	51.7	8.31	60.0	9.66	64.2	10.4	68.4	11.1	76.7	12.6	85.1	14.1
		21	43.3	7.09	51.7	8.38	60.0	9.75	64.2	10.5	68.4	11.2	76.7	12.7	85.1	14.3
		23	43.3	7.21	51.7	8.53	60.0	9.93	64.2	10.7	68.4	11.4	76.7	13.2	85.1	15.2
		25	43.3	7.33	51.7	8.68	60.0	10.3	64.2	11.2	68.4	12.1	76.7	14.1	85.1	16.2
		27	43.3	7.60	51.7	9.21	60.0	11.0	64.2	11.9	68.4	12.9	76.7	15.0	85.1	17.3
		29	43.3	8.05	51.7	9.77	60.0	11.7	64.2	12.7	68.4	13.8	76.7	16.0	85.1	18.4
		31	43.3	8.52	51.7	10.4	60.0	12.4	64.2	13.5	68.4	14.6	76.7	17.0	85.1	19.7
		33	43.3	9.02	51.7	11.0	60.0	13.2	64.2	14.3	68.4	15.5	76.7	18.1	85.1	20.9
		35	43.3	9.53	51.7	11.6	60.0	14.0	64.2	15.2	68.4	16.5	76.7	19.3	85.1	22.3
		37	43.3	10.1	51.7	12.3	60.0	14.8	64.2	16.1	68.4	17.5	76.7	20.5	85.1	23.7
		39	43.3	10.6	51.7	13.0	60.0	15.7	64.2	17.1	68.4	18.6	76.7	21.8	85.1	25.2
50	475 (53.50)	10	36.1	5.62	43.1	6.50	50.0	7.44	53.5	7.93	57.0	8.43	63.9	9.46	70.9	10.5
		12	36.1	5.69	43.1	6.59	50.0	7.55	53.5	8.05	57.0	8.56	63.9	9.62	70.9	10.7
		14	36.1	5.76	43.1	6.69	50.0	7.67	53.5	8.18	57.0	8.70	63.9	9.79	70.9	10.9
		16	36.1	5.84	43.1	6.79	50.0	7.79	53.5	8.31	57.0	8.85	63.9	9.96	70.9	11.1
		18	36.1	5.92	43.1	6.89	50.0	7.92	53.5	8.45	57.0	9.00	63.9	10.1	70.9	11.3
		20	36.1	6.01	43.1	7.00	50.0	8.05	53.5	8.60	57.0	9.16	63.9	10.3	70.9	11.5
		21	36.1	6.05	43.1	7.05	50.0	8.12	53.5	8.67	57.0	9.24	63.9	10.4	70.9	11.6
		23	36.1	6.14	43.1	7.17	50.0	8.26	53.5	8.83	57.0	9.41	63.9	10.6	70.9	11.9
		25	36.1	6.24	43.1	7.29	50.0	8.41	53.5	9.01	57.0	9.70	63.9	11.1	70.9	12.7
		27	36.1	6.34	43.1	7.55	50.0	8.87	53.5	9.58	57.0	10.3	63.9	11.9	70.9	13.5
		29	36.1	6.70	43.1	8.00	50.0	9.42	53.5	10.2	57.0	11.0	63.9	12.6	70.9	14.4
		31	36.1	7.08	43.1	8.47	50.0	9.98	53.5	10.8	57.0	11.6	63.9	13.4	70.9	15.3
		33	36.1	7.48	43.1	8.96	50.0	10.6	53.5	11.4	57.0	12.3	63.9	14.3	70.9	16.3
		35	36.1	7.89	43.1	9.47	50.0	11.2	53.5	12.1	57.0	13.1	63.9	15.1	70.9	17.3
		37	36.1	8.32	43.1	10.0	50.0	11.9	53.5	12.8	57.0	13.9	63.9	16.1	70.9	18.4
		39	36.1	8.78	43.1	10.6	50.0	12.5	53.5	13.6	57.0	14.7	63.9	17.0	70.9	19.5

4TW31482-1A

4 Capacity tables

4 - 2 Cooling capacity tables

REYQ40P8

TC: Total Capacity: kW ; PI: Power Input: kW (compressor + outdoor fan motor)

Combination (%)	Capacity index (kW)	Outdoor air temp. (°CDB)	Indoor air temperature: 14.0 °CWB 20.0 °CDB TC kW	14.0 °CWB 20.0 °CDB PI kW	16.0 °CWB 23.0 °CDB TC kW	16.0 °CWB 23.0 °CDB PI kW	18.0 °CWB 26.0 °CDB TC kW	18.0 °CWB 26.0 °CDB PI kW	19.0 °CWB 27.0 °CDB TC kW	19.0 °CWB 27.0 °CDB PI kW	20.0 °CWB 28.0 °CDB TC kW	20.0 °CWB 28.0 °CDB PI kW	22.0 °CWB 30.0 °CDB TC kW	22.0 °CWB 30.0 °CDB PI kW	24.0 °CWB 32.0 °CDB TC kW	24.0 °CWB 32.0 °CDB PI kW
130	1300 (145.60)	10	98.3	15.4	117	18.8	136	22.4	141	22.4	143	22.4	146	22.4	150	22.4
		12	98.3	15.7	117	19.2	136	22.8	139	22.8	141	22.8	145	22.8	148	22.8
		14	98.3	16.0	117	19.5	136	23.1	137	23.1	139	23.1	143	23.1	146	23.1
		16	98.3	16.3	117	19.9	134	23.0	136	23.1	137	23.1	141	23.1	144	23.1
		18	98.3	16.6	117	20.3	132	23.9	134	24.0	136	24.1	139	24.3	143	24.6
		20	98.3	16.9	117	21.7	130	25.0	132	25.2	134	25.3	137	25.5	141	25.8
		21	98.3	17.4	117	22.4	129	25.6	131	25.7	133	25.9	136	26.1	140	26.4
		23	98.3	18.6	117	24.0	127	26.8	129	26.9	131	27.1	135	27.3	138	27.6
		25	98.3	19.9	117	25.7	126	28.0	127	28.1	129	28.2	133	28.5	136	28.8
		27	98.3	21.3	117	27.5	124	29.1	126	29.3	127	29.4	131	29.7	134	30.1
		29	98.3	22.7	117	29.4	122	30.3	124	30.5	126	30.6	129	31.0	133	31.3
		31	98.3	24.2	117	31.2	120	31.5	122	31.7	124	31.8	127	32.2	131	32.5
		33	98.3	25.8	115	32.3	118	32.7	120	32.9	122	33.1	125	33.4	129	33.8
		35	98.3	27.5	113	33.5	117	33.9	118	34.1	120	34.3	124	34.7	127	35.0
		37	98.3	29.3	111	34.7	115	35.1	116	35.3	118	35.5	122	35.9	125	36.3
		39	98.3	31.2	109	35.9	113	36.3	115	36.5	116	36.7	120	37.2	124	37.6
120	1200 (134.40)	10	90.7	14.1	108	17.2	126	20.4	134	22.1	141	22.1	144	22.1	147	22.1
		12	90.7	14.3	108	17.5	126	20.8	134	22.5	139	22.5	142	22.5	145	22.5
		14	90.7	14.6	108	17.8	126	21.2	134	22.9	137	22.9	140	22.9	143	22.9
		16	90.7	14.9	108	18.2	126	21.6	133	23.1	135	23.1	138	23.1	142	23.1
		18	90.7	15.1	108	18.5	126	22.4	132	23.9	133	24.0	137	24.2	140	24.4
		20	90.7	15.4	108	19.3	126	24.0	130	25.0	131	25.1	135	25.4	138	25.6
		21	90.7	15.6	108	19.9	126	24.9	129	25.6	131	25.7	134	25.9	137	26.2
		23	90.7	16.7	108	21.4	125	26.6	127	26.8	129	26.9	132	27.1	135	27.4
		25	90.7	17.8	108	22.9	124	27.8	125	27.9	127	28.1	130	28.3	133	28.6
		27	90.7	19.0	108	24.5	122	29.0	123	29.1	125	29.2	128	29.5	132	29.8
		29	90.7	20.3	108	26.1	120	30.1	122	30.3	123	30.4	127	30.7	130	31.0
		31	90.7	21.6	108	27.9	118	31.3	120	31.5	121	31.6	125	31.9	128	32.3
		33	90.7	23.0	108	29.7	116	32.5	118	32.7	120	32.8	123	33.2	126	33.5
		35	90.7	24.5	108	31.7	115	33.7	116	33.9	118	34.0	121	34.4	124	34.7
		37	90.7	26.1	108	33.8	113	34.9	114	35.1	116	35.2	119	35.6	123	36.0
		39	90.7	27.7	108	35.7	111	36.1	113	36.3	114	36.5	117	36.9	121	37.2
110	1100 (123.20)	10	83.1	12.8	99.2	15.5	115	18.5	123	19.9	131	21.5	141	22.0	144	22.0
		12	83.1	13.0	99.2	15.8	115	18.8	123	20.3	131	21.9	140	22.4	143	22.4
		14	83.1	13.2	99.2	16.1	115	19.2	123	20.7	131	22.3	138	22.8	141	22.8
		16	83.1	13.5	99.2	16.4	115	19.5	123	21.1	131	22.7	136	23.1	139	23.1
		18	83.1	13.7	99.2	16.8	115	19.9	123	21.7	131	23.8	134	24.0	137	24.2
		20	83.1	14.0	99.2	17.1	115	21.1	123	23.3	129	25.0	132	25.2	135	25.4
		21	83.1	14.1	99.2	17.6	115	21.9	123	24.2	128	25.6	131	25.8	134	26.0
		23	83.1	14.8	99.2	18.9	115	23.4	123	25.9	127	26.7	130	26.9	133	27.2
		25	83.1	15.8	99.2	20.2	115	25.1	123	27.8	125	27.9	128	28.1	131	28.4
		27	83.1	16.9	99.2	21.5	115	26.8	121	28.9	123	29.1	126	29.3	129	29.6
		29	83.1	18.0	99.2	23.0	115	28.7	120	30.1	121	30.2	124	30.5	127	30.8
		31	83.1	19.1	99.2	24.5	115	30.6	118	31.3	119	31.4	122	31.7	125	32.0
		33	83.1	20.4	99.2	26.1	114	32.3	116	32.4	117	32.6	120	32.9	123	33.2
		35	83.1	21.7	99.2	27.9	113	33.5	114	33.6	116	33.8	119	34.1	122	34.4
		37	83.1	23.0	99.2	29.7	111	34.6	112	34.8	114	35.0	117	35.3	120	35.7
		39	83.1	24.5	99.2	31.6	109	35.8	110	36.0	112	36.2	115	36.6	118	36.9
100	1000 (112.00)	10	75.6	11.5	90.2	14.0	105	16.5	112	17.9	119	19.2	134	22.0	142	22.0
		12	75.6	11.7	90.2	14.2	105	16.8	112	18.2	119	19.6	134	22.4	140	22.4
		14	75.6	11.9	90.2	14.5	105	17.2	112	18.5	119	20.0	134	22.8	138	22.8
		16	75.6	12.1	90.2	14.8	105	17.5	112	18.9	119	20.3	133	23.1	136	23.1
		18	75.6	12.4	90.2	15.0	105	17.8	112	19.3	119	20.7	132	23.8	134	24.0
		20	75.6	12.6	90.2	15.3	105	18.4	112	20.3	119	22.2	130	25.0	132	25.2
		21	75.6	12.7	90.2	15.5	105	19.0	112	21.0	119	23.0	129	25.6	132	25.8
		23	75.6	13.1	90.2	16.5	105	20.4	112	22.5	119	24.7	127	26.8	130	27.0
		25	75.6	13.9	90.2	17.6	105	21.8	112	24.1	119	26.4	125	27.9	128	28.1
		27	75.6	14.8	90.2	18.8	105	23.3	112	25.7	119	28.3	123	29.1	126	29.3
		29	75.6	15.8	90.2	20.1	105	24.9	112	27.5	119	30.0	122	30.3	124	30.5
		31	75.6	16.8	90.2	21.4	105	26.6	112	29.4	117	31.2	120	31.5	122	31.7
		33	75.6	17.9	90.2	22.8	105	28.3	112	31.3	115	32.4	118	32.6	121	32.9
		35	75.6	19.0	90.2	24.3	105	30.2	112	33.4	113	33.5	116	33.8	119	34.1
		37	75.6	20.2	90.2	25.8	105	32.2	110	34.6	112	34.7	114	35.0	117	35.4
		39	75.6	21.5	90.2	27.5	105	34.3	108	35.8	110	35.9	112	36.3	115	36.6

4TW31482-1A

NOTES - ANMERKUNGEN - Σημειώσεις - NOTAS - REMARQUES - NOTE - OPMERKINGEN - примечания - NOTLAR

1 The above table shows the average value of conditions which may occur.
Die obige Tabelle zeigt den Durchschnittswert der Bedingungen, die auftreten können.
Στον παραπάνω πίνακα αναγράφεται η μέση τιμή για συνθήκες που μπορεί να προκύψουν.
La tabla de arriba muestra el valor medio de condiciones que pueden ocurrir.
Le tableau ci-dessus donne la valeur moyenne pour des conditions qui peuvent survenir.
La tabella in alto mostra il valore delle condizioni medie che si possono riscontrare.
De tabel hierboven geeft de gemiddelde waarde aan van situaties die kunnen voorvallen.
Таблица расположенная выше показывает среднее значение условий, которые могут наступить.
Yukarıdaki tablo meydana gelebilecek koşulların ortalama değerini göstermektedir.

4 Capacity tables

4 - 2 Cooling capacity tables

REYQ40P8

TC: Total Capacity: kW ; PI: Power Input: kW (compressor + outdoor fan motor)

Combination (%)	Capacity index (kW)	Outdoor air temp. (°CDB)	Indoor air temperature: 14.0 °CWB / 20.0 °CDB		16.0 °CWB / 23.0 °CDB		18.0 °CWB / 26.0 °CDB		19.0 °CWB / 27.0 °CDB		20.0 °CWB / 28.0 °CDB		22.0 °CWB / 30.0 °CDB		24.0 °CWB / 32.0 °CDB	
			TC	PI	TC	PI	TC	PI	TC	PI	TC	PI	TC	PI	TC	PI
			kW	kW	kW	kW	kW	kW	kW	kW	kW	kW	kW	kW	kW	kW
90	900	10	68.0	10.3	81.1	12.4	94.2	14.7	101	15.8	107	17.0	120	19.4	134	21.9
	(100.80)	12	68.0	10.5	81.1	12.6	94.2	14.9	101	16.1	107	17.3	120	19.8	134	22.3
		14	68.0	10.7	81.1	12.9	94.2	15.2	101	16.4	107	17.7	120	20.2	134	22.7
		16	68.0	10.8	81.1	13.1	94.2	15.5	101	16.7	107	18.0	120	20.6	133	23.1
		18	68.0	11.0	81.1	13.4	94.2	15.8	101	17.1	107	18.4	120	21.0	132	23.8
		20	68.0	11.2	81.1	13.6	94.2	16.1	101	17.4	107	19.0	120	22.6	130	25.0
		21	68.0	11.3	81.1	13.8	94.2	16.4	101	18.0	107	19.7	120	23.4	129	25.6
		23	68.0	11.6	81.1	14.3	94.2	17.6	101	19.3	107	21.1	120	25.1	127	26.7
		25	68.0	12.2	81.1	15.3	94.2	18.8	101	20.6	107	22.6	120	26.8	125	27.9
		27	68.0	13.0	81.1	16.3	94.2	20.0	101	22.1	107	24.2	120	28.7	123	29.1
		29	68.0	13.8	81.1	17.4	94.2	21.4	101	23.5	107	25.8	119	30.0	122	30.3
		31	68.0	14.7	81.1	18.5	94.2	22.8	101	25.1	107	27.6	117	31.2	120	31.5
		33	68.0	15.6	81.1	19.7	94.2	24.3	101	26.8	107	29.4	115	32.4	118	32.6
		35	68.0	16.5	81.1	20.9	94.2	25.9	101	28.5	107	31.3	114	33.6	116	33.8
		37	68.0	17.6	81.1	22.3	94.2	27.5	101	30.4	107	33.4	112	34.8	114	35.0
		39	68.0	18.6	81.1	23.7	94.2	29.3	101	32.4	107	35.6	110	35.9	112	36.2
80	800	10	60.5	9.14	72.1	11.0	83.8	12.9	89.6	13.9	95.4	14.9	107	17.0	119	19.1
	(89.60)	12	60.5	9.29	72.1	11.1	83.8	13.1	89.6	14.1	95.4	15.2	107	17.3	119	19.5
		14	60.5	9.45	72.1	11.3	83.8	13.3	89.6	14.4	95.4	15.4	107	17.6	119	19.8
		16	60.5	9.61	72.1	11.5	83.8	13.6	89.6	14.6	95.4	15.7	107	18.0	119	20.2
		18	60.5	9.77	72.1	11.8	83.8	13.8	89.6	14.9	95.4	16.0	107	18.3	119	20.6
		20	60.5	9.95	72.1	12.0	83.8	14.1	89.6	15.2	95.4	16.4	107	19.0	119	22.1
		21	60.5	10.0	72.1	12.1	83.8	14.3	89.6	15.4	95.4	16.7	107	19.7	119	22.9
		23	60.5	10.2	72.1	12.3	83.8	14.9	89.6	16.4	95.4	17.9	107	21.1	119	24.5
		25	60.5	10.6	72.1	13.1	83.8	16.0	89.6	17.5	95.4	19.1	107	22.5	119	26.3
		27	60.5	11.2	72.1	14.0	83.8	17.0	89.6	18.7	95.4	20.4	107	24.1	119	28.1
		29	60.5	11.9	72.1	14.9	83.8	18.1	89.6	19.9	95.4	21.8	107	25.7	119	30.0
		31	60.5	12.7	72.1	15.8	83.8	19.3	89.6	21.2	95.4	23.2	107	27.5	117	31.2
		33	60.5	13.4	72.1	16.8	83.8	20.6	89.6	22.6	95.4	24.7	107	29.3	115	32.4
		35	60.5	14.3	72.1	17.9	83.8	21.9	89.6	24.1	95.4	26.3	107	31.2	113	33.5
		37	60.5	15.1	72.1	19.0	83.8	23.3	89.6	25.6	95.4	28.0	107	33.3	111	34.7
		39	60.5	16.0	72.1	20.1	83.8	24.7	89.6	27.2	95.4	29.8	107	35.4	110	35.9
70	700	10	52.9	8.04	63.1	9.54	73.3	11.1	78.4	12.0	83.5	12.8	93.7	14.6	104	16.4
	(78.40)	12	52.9	8.16	63.1	9.70	73.3	11.3	78.4	12.2	83.5	13.1	93.7	14.8	104	16.7
		14	52.9	8.29	63.1	9.86	73.3	11.5	78.4	12.4	83.5	13.3	93.7	15.1	104	17.0
		16	52.9	8.42	63.1	10.0	73.3	11.7	78.4	12.6	83.5	13.5	93.7	15.4	104	17.3
		18	52.9	8.56	63.1	10.2	73.3	12.0	78.4	12.9	83.5	13.8	93.7	15.7	104	17.7
		20	52.9	8.71	63.1	10.4	73.3	12.2	78.4	13.1	83.5	14.1	93.7	16.0	104	18.2
		21	52.9	8.78	63.1	10.5	73.3	12.3	78.4	13.2	83.5	14.2	93.7	16.3	104	18.8
		23	52.9	8.93	63.1	10.7	73.3	12.6	78.4	13.7	83.5	14.9	93.7	17.4	104	20.2
		25	52.9	9.09	63.1	11.1	73.3	13.4	78.4	14.6	83.5	15.9	93.7	18.6	104	21.6
		27	52.9	9.61	63.1	11.8	73.3	14.3	78.4	15.6	83.5	17.0	93.7	19.9	104	23.0
		29	52.9	10.2	63.1	12.6	73.3	15.2	78.4	16.6	83.5	18.1	93.7	21.2	104	24.6
		31	52.9	10.8	63.1	13.3	73.3	16.2	78.4	17.7	83.5	19.2	93.7	22.6	104	26.3
		33	52.9	11.5	63.1	14.2	73.3	17.2	78.4	18.8	83.5	20.5	93.7	24.1	104	28.0
		35	52.9	12.1	63.1	15.0	73.3	18.2	78.4	20.0	83.5	21.8	93.7	25.7	104	29.8
		37	52.9	12.9	63.1	15.9	73.3	19.4	78.4	21.2	83.5	23.2	93.7	27.3	104	31.8
		39	52.9	13.6	63.1	16.9	73.3	20.6	78.4	22.6	83.5	24.6	93.7	29.1	104	33.9
60	600	10	45.4	7.00	54.1	8.21	62.8	9.50	67.2	10.2	71.6	10.9	80.3	12.3	89.0	13.8
	(67.20)	12	45.4	7.09	54.1	8.34	62.8	9.66	67.2	10.3	71.6	11.0	80.3	12.5	89.0	14.0
		14	45.4	7.20	54.1	8.47	62.8	9.82	67.2	10.5	71.6	11.2	80.3	12.7	89.0	14.3
		16	45.4	7.31	54.1	8.60	62.8	9.99	67.2	10.7	71.6	11.4	80.3	13.0	89.0	14.5
		18	45.4	7.42	54.1	8.75	62.8	10.2	67.2	10.9	71.6	11.7	80.3	13.2	89.0	14.8
		20	45.4	7.53	54.1	8.90	62.8	10.3	67.2	11.1	71.6	11.9	80.3	13.5	89.0	15.1
		21	45.4	7.59	54.1	8.97	62.8	10.4	67.2	11.2	71.6	12.0	80.3	13.6	89.0	15.3
		23	45.4	7.72	54.1	9.13	62.8	10.6	67.2	11.4	71.6	12.2	80.3	14.1	89.0	16.2
		25	45.4	7.85	54.1	9.30	62.8	11.0	67.2	12.0	71.6	13.0	80.3	15.1	89.0	17.3
		27	45.4	8.13	54.1	9.86	62.8	11.8	67.2	12.8	71.6	13.8	80.3	16.1	89.0	18.5
		29	45.4	8.62	54.1	10.5	62.8	12.5	67.2	13.6	71.6	14.7	80.3	17.1	89.0	19.7
		31	45.4	9.12	54.1	11.1	62.8	13.3	67.2	14.4	71.6	15.7	80.3	18.2	89.0	21.0
		33	45.4	9.65	54.1	11.8	62.8	14.1	67.2	15.3	71.6	16.6	80.3	19.4	89.0	22.4
		35	45.4	10.2	54.1	12.5	62.8	14.9	67.2	16.3	71.6	17.7	80.3	20.6	89.0	23.9
		37	45.4	10.8	54.1	13.2	62.8	15.9	67.2	17.3	71.6	18.8	80.3	21.9	89.0	25.4
		39	45.4	11.4	54.1	14.0	62.8	16.8	67.2	18.3	71.6	19.9	80.3	23.3	89.0	27.0
50	500	10	37.8	6.01	45.1	6.96	52.4	7.96	56.0	8.49	59.6	9.02	66.9	10.1	74.2	11.3
	(56.00)	12	37.8	6.09	45.1	7.06	52.4	8.08	56.0	8.62	59.6	9.17	66.9	10.3	74.2	11.5
		14	37.8	6.17	45.1	7.16	52.4	8.21	56.0	8.76	59.6	9.32	66.9	10.5	74.2	11.7
		16	37.8	6.25	45.1	7.27	52.4	8.34	56.0	8.90	59.6	9.47	66.9	10.7	74.2	11.9
		18	37.8	6.34	45.1	7.38	52.4	8.48	56.0	9.05	59.6	9.64	66.9	10.9	74.2	12.1
		20	37.8	6.43	45.1	7.49	52.4	8.62	56.0	9.21	59.6	9.81	66.9	11.1	74.2	12.3
		21	37.8	6.48	45.1	7.55	52.4	8.69	56.0	9.29	59.6	9.89	66.9	11.2	74.2	12.5
		23	37.8	6.58	45.1	7.67	52.4	8.84	56.0	9.45	59.6	10.1	66.9	11.4	74.2	12.7
		25	37.8	6.68	45.1	7.80	52.4	9.00	56.0	9.65	59.6	10.4	66.9	11.9	74.2	13.6
		27	37.8	6.78	45.1	8.08	52.4	9.50	56.0	10.3	59.6	11.0	66.9	12.7	74.2	14.5
		29	37.8	7.17	45.1	8.56	52.4	10.1	56.0	10.9	59.6	11.7	66.9	13.5	74.2	15.4
		31	37.8	7.58	45.1	9.06	52.4	10.7	56.0	11.6	59.6	12.5	66.9	14.4	74.2	16.4
		33	37.8	8.01	45.1	9.59	52.4	11.3	56.0	12.3	59.6	13.2	66.9	15.3	74.2	17.5
		35	37.8	8.45	45.1	10.1	52.4	12.0	56.0	13.0	59.6	14.0	66.9	16.2	74.2	18.5
		37	37.8	8.91	45.1	10.7	52.4	12.7	56.0	13.8	59.6	14.9	66.9	17.2	74.2	19.7
		39	37.8	9.39	45.1	11.3	52.4	13.4	56.0	14.6	59.6	15.7	66.9	18.2	74.2	20.9

4TW31482-1A

4 Capacity tables

4 - 2 Cooling capacity tables

REYQ42P8

TC: Total Capacity: kW ; PI: Power Input: kW (compressor + outdoor fan motor)

Combination (%)	Capacity index (kW)	Outdoor air temp. (°CDB)	Indoor air temperature: 14.0 °CWB 20.0 °CDB TC kW	14.0 °CWB 20.0 °CDB PI kW	16.0 °CWB 23.0 °CDB TC kW	16.0 °CWB 23.0 °CDB PI kW	18.0 °CWB 26.0 °CDB TC kW	18.0 °CWB 26.0 °CDB PI kW	19.0 °CWB 27.0 °CDB TC kW	19.0 °CWB 27.0 °CDB PI kW	20.0 °CWB 28.0 °CDB TC kW	20.0 °CWB 28.0 °CDB PI kW	22.0 °CWB 30.0 °CDB TC kW	22.0 °CWB 30.0 °CDB PI kW	24.0 °CWB 32.0 °CDB TC kW	24.0 °CWB 32.0 °CDB PI kW
130	1365 (153.40)	10	104	16.5	123	20.2	143	24.0	149	24.0	150	24.0	154	24.0	158	24.0
		12	104	16.8	123	20.6	143	24.5	147	24.5	149	24.5	152	24.5	156	24.5
		14	104	17.1	123	21.0	143	24.8	145	24.8	147	24.8	150	24.8	154	24.8
		16	104	17.4	123	21.4	141	24.6	143	24.7	145	24.7	148	24.8	152	24.8
		18	104	17.8	123	21.8	139	25.6	141	25.7	143	25.8	147	26.1	150	26.3
		20	104	18.1	123	23.2	137	26.8	139	27.0	141	27.1	145	27.4	148	27.6
		21	104	18.6	123	24.0	136	27.5	138	27.6	140	27.7	144	28.0	147	28.3
		23	104	20.0	123	25.8	134	28.7	136	28.9	138	29.0	142	29.3	145	29.6
		25	104	21.3	123	27.6	132	30.0	134	30.1	136	30.3	140	30.6	144	30.9
		27	104	22.8	123	29.5	130	31.2	132	31.4	134	31.6	138	31.9	142	32.2
		29	104	24.3	123	31.5	129	32.5	130	32.7	132	32.8	136	33.2	140	33.5
		31	104	25.9	123	33.4	127	33.8	128	33.9	130	34.1	134	34.5	138	34.9
		33	104	27.7	121	34.7	125	35.0	127	35.2	128	35.4	132	35.8	136	36.2
		35	104	29.5	119	35.9	123	36.3	125	36.5	126	36.7	130	37.1	134	37.6
		37	104	31.4	117	37.2	121	37.6	123	37.8	125	38.0	128	38.5	132	38.9
		39	104	33.4	115	38.5	119	38.9	121	39.1	123	39.4	126	39.8	130	40.3
120	1260 (141.60)	10	95.6	15.1	114	18.4	132	21.9	142	23.6	148	23.6	152	23.6	155	23.6
		12	95.6	15.3	114	18.7	132	22.3	142	24.1	146	24.1	150	24.1	153	24.1
		14	95.6	15.6	114	19.1	132	22.7	142	24.6	144	24.6	148	24.6	151	24.6
		16	95.6	15.9	114	19.5	132	23.2	141	24.7	142	24.7	146	24.8	149	24.8
		18	95.6	16.2	114	19.9	132	24.0	139	25.6	140	25.7	144	25.9	147	26.1
		20	95.6	16.5	114	20.6	132	25.7	137	26.8	139	26.9	142	27.2	145	27.4
		21	95.6	16.7	114	21.4	132	26.7	136	27.4	138	27.6	141	27.8	144	28.1
		23	95.6	17.8	114	22.9	132	28.5	134	28.7	136	28.8	139	29.1	143	29.4
		25	95.6	19.1	114	24.5	130	29.8	132	29.9	134	30.1	137	30.4	141	30.7
		27	95.6	20.4	114	26.2	128	31.0	130	31.2	132	31.3	135	31.7	139	32.0
		29	95.6	21.7	114	28.0	126	32.3	128	32.5	130	32.6	133	32.9	137	33.3
		31	95.6	23.1	114	29.9	125	33.6	126	33.7	128	33.9	131	34.2	135	34.6
		33	95.6	24.7	114	31.9	123	34.8	124	35.0	126	35.2	130	35.5	133	35.9
		35	95.6	26.2	114	34.0	121	36.1	122	36.3	124	36.5	128	36.9	131	37.2
		37	95.6	27.9	114	36.2	119	37.4	120	37.6	122	37.8	126	38.2	129	38.6
		39	95.6	29.7	113	38.2	117	38.7	119	38.9	120	39.1	124	39.5	127	39.9
110	1155 (129.80)	10	87.6	13.7	104	16.7	121	19.8	130	21.4	138	23.0	149	23.5	152	23.5
		12	87.6	13.9	104	17.0	121	20.2	130	21.8	138	23.4	147	24.0	150	24.0
		14	87.6	14.2	104	17.3	121	20.5	130	22.2	138	23.9	145	24.4	148	24.4
		16	87.6	14.4	104	17.6	121	20.9	130	22.6	138	24.3	143	24.8	146	24.8
		18	87.6	14.7	104	18.0	121	21.4	130	23.3	138	25.5	141	25.7	144	25.9
		20	87.6	15.0	104	18.3	121	22.6	130	25.0	136	26.8	139	27.0	143	27.2
		21	87.6	15.1	104	18.9	121	23.4	130	25.9	135	27.4	138	27.6	142	27.9
		23	87.6	15.9	104	20.2	121	25.1	130	27.8	133	28.6	136	28.9	140	29.1
		25	87.6	16.9	104	21.6	121	26.9	130	29.8	131	29.9	135	30.1	138	30.4
		27	87.6	18.1	104	23.1	121	28.8	128	31.0	129	31.1	133	31.4	136	31.7
		29	87.6	19.3	104	24.7	121	30.7	126	32.3	128	32.4	131	32.7	134	33.0
		31	87.6	20.5	104	26.3	121	32.8	124	33.5	126	33.7	129	34.0	132	34.3
		33	87.6	21.8	104	28.0	121	34.6	122	34.8	124	34.9	127	35.3	130	35.6
		35	87.6	23.2	104	29.9	119	35.9	120	36.0	122	36.2	125	36.6	128	36.9
		37	87.6	24.7	104	31.8	117	37.1	118	37.3	120	37.5	123	37.9	126	38.2
		39	87.6	26.2	104	33.9	115	38.4	116	38.6	118	38.8	121	39.2	124	39.6
100	1050 (118.00)	10	79.6	12.3	95.0	15.0	110	17.7	118	19.1	126	20.6	141	23.5	149	23.5
		12	79.6	12.6	95.0	15.2	110	18.1	118	19.5	126	21.0	141	24.0	147	24.0
		14	79.6	12.8	95.0	15.5	110	18.4	118	19.9	126	21.4	141	24.4	145	24.4
		16	79.6	13.0	95.0	15.8	110	18.8	118	20.3	126	21.8	141	24.8	143	24.8
		18	79.6	13.3	95.0	16.1	110	19.1	118	20.7	126	22.2	139	25.6	141	25.8
		20	79.6	13.5	95.0	16.4	110	19.7	118	21.7	126	23.8	137	26.8	140	27.0
		21	79.6	13.6	95.0	16.6	110	20.4	118	22.5	126	24.7	136	27.4	139	27.6
		23	79.6	14.0	95.0	17.7	110	21.9	118	24.1	126	26.5	134	28.7	137	28.9
		25	79.6	14.9	95.0	18.9	110	23.4	118	25.8	126	28.3	132	29.9	135	30.2
		27	79.6	15.9	95.0	20.2	110	25.0	118	27.6	126	30.3	130	31.2	133	31.4
		29	79.6	16.9	95.0	21.5	110	26.7	118	29.5	125	32.2	128	32.5	131	32.7
		31	79.6	18.0	95.0	22.9	110	28.5	118	31.5	123	33.4	126	33.7	129	34.0
		33	79.6	19.2	95.0	24.4	110	30.4	118	33.6	121	34.7	124	35.0	127	35.3
		35	79.6	20.4	95.0	26.0	110	32.4	118	35.8	119	36.0	122	36.3	125	36.6
		37	79.6	21.6	95.0	27.7	110	34.5	116	37.1	118	37.2	120	37.6	123	37.9
		39	79.6	23.0	95.0	29.4	110	36.7	114	38.3	116	38.5	118	38.9	121	39.2

4TW31482-1A

NOTES - ANMERKUNGEN - Σημειώσεις - NOTAS - REMARQUES - NOTE - OPMERKINGEN - примечания - NOTLAR

1 The above table shows the average value of conditions which may occur.
Die obige Tabelle zeigt den Durchschnittswert der Bedingungen, die auftreten können.
Στον παραπάνω πίνακα αναγράφεται η μέση τιμή για συνθήκες που μπορεί να προκύψουν.
La tabla de arriba muestra el valor medio de condiciones que pueden ocurrir.
Le tableau ci-dessus donne la valeur moyenne pour des conditions qui peuvent survenir.
La tabella in alto mostra il valore delle condizioni medie che si possono riscontrare.
De tabel hierboven geeft de gemiddelde waarde aan van situaties die kunnen voorvallen.
Таблица расположенная выше показывает среднее значение условий, которые могут наступить.
Yukarıdaki tablo meydana gelebilecek koşulların ortalama değerini göstermektedir.

4 Capacity tables

4 - 2 Cooling capacity tables

REYQ42P8

TC: Total Capacity: kW ; PI: Power Input: kW (compressor + outdoor fan motor)

Combination (%)	Capacity index (kW)	Outdoor air temp. (°CDB)	Indoor air temperature: 14.0 °CWB / 20.0 °CDB		16.0 °CWB / 23.0 °CDB		18.0 °CWB / 26.0 °CDB		19.0 °CWB / 27.0 °CDB		20.0 °CWB / 28.0 °CDB		22.0 °CWB / 30.0 °CDB		24.0 °CWB / 32.0 °CDB	
			TC	PI	TC	PI	TC	PI	TC	PI	TC	PI	TC	PI	TC	PI
			kW	kW	kW	kW	kW	kW	kW	kW	kW	kW	kW	kW	kW	kW
90	945 (106.20)	10	71.7	11.0	85.5	13.3	99.3	15.7	106	17.0	113	18.2	127	20.8	141	23.5
		12	71.7	11.2	85.5	13.6	99.3	16.0	106	17.3	113	18.6	127	21.2	141	23.9
		14	71.7	11.4	85.5	13.8	99.3	16.3	106	17.6	113	18.9	127	21.6	141	24.4
		16	71.7	11.6	85.5	14.1	99.3	16.6	106	18.0	113	19.3	127	22.1	140	24.8
		18	71.7	11.8	85.5	14.3	99.3	16.9	106	18.3	113	19.7	127	22.5	139	25.6
		20	71.7	12.1	85.5	14.6	99.3	17.3	106	18.7	113	20.4	127	24.2	137	26.8
		21	71.7	12.2	85.5	14.7	99.3	17.6	106	19.3	113	21.1	127	25.0	136	27.4
		23	71.7	12.4	85.5	15.4	99.3	18.8	106	20.7	113	22.7	127	26.9	134	28.7
		25	71.7	13.1	85.5	16.4	99.3	20.1	106	22.1	113	24.2	127	28.8	132	29.9
		27	71.7	13.9	85.5	17.5	99.3	21.5	106	23.6	113	25.9	127	30.8	130	31.2
		29	71.7	14.8	85.5	18.6	99.3	22.9	106	25.2	113	27.7	125	32.2	128	32.4
		31	71.7	15.7	85.5	19.8	99.3	24.4	106	26.9	113	29.5	124	33.5	126	33.7
		33	71.7	16.7	85.5	21.1	99.3	26.0	106	28.7	113	31.5	122	34.7	124	35.0
		35	71.7	17.7	85.5	22.4	99.3	27.7	106	30.6	113	33.6	120	36.0	122	36.3
		37	71.7	18.8	85.5	23.9	99.3	29.5	106	32.6	113	35.8	118	37.3	120	37.6
		39	71.7	20.0	85.5	25.4	99.3	31.4	106	34.7	113	38.1	116	38.5	118	38.8
80	840 (94.40)	10	63.7	9.80	76.0	11.7	88.3	13.8	94.4	14.9	101	15.9	113	18.2	125	20.5
		12	63.7	9.96	76.0	11.9	88.3	14.0	94.4	15.1	101	16.2	113	18.5	125	20.9
		14	63.7	10.1	76.0	12.1	88.3	14.3	94.4	15.4	101	16.5	113	18.9	125	21.3
		16	63.7	10.3	76.0	12.4	88.3	14.6	94.4	15.7	101	16.9	113	19.2	125	21.7
		18	63.7	10.5	76.0	12.6	88.3	14.8	94.4	16.0	101	17.2	113	19.6	125	22.1
		20	63.7	10.7	76.0	12.8	88.3	15.1	94.4	16.3	101	17.5	113	20.3	125	23.7
		21	63.7	10.8	76.0	13.0	88.3	15.3	94.4	16.5	101	17.9	113	21.1	125	24.5
		23	63.7	11.0	76.0	13.2	88.3	16.0	94.4	17.5	101	19.2	113	22.6	125	26.3
		25	63.7	11.3	76.0	14.1	88.3	17.1	94.4	18.8	101	20.5	113	24.2	125	28.1
		27	63.7	12.0	76.0	15.0	88.3	18.3	94.4	20.0	101	21.9	113	25.8	125	30.1
		29	63.7	12.8	76.0	15.9	88.3	19.5	94.4	21.3	101	23.3	113	27.6	125	32.2
		31	63.7	13.6	76.0	17.0	88.3	20.7	94.4	22.7	101	24.9	113	29.4	123	33.4
		33	63.7	14.4	76.0	18.0	88.3	22.1	94.4	24.2	101	26.5	113	31.4	121	34.7
		35	63.7	15.3	76.0	19.1	88.3	23.5	94.4	25.8	101	28.2	113	33.5	119	35.9
		37	63.7	16.2	76.0	20.3	88.3	24.9	94.4	27.4	101	30.1	113	35.7	117	37.2
		39	63.7	17.2	76.0	21.6	88.3	26.5	94.4	29.2	101	32.0	113	38.0	115	38.5
70	735 (82.60)	10	55.7	8.62	66.5	10.2	77.2	11.9	82.6	12.8	88.0	13.7	98.7	15.6	109	17.6
		12	55.7	8.75	66.5	10.4	77.2	12.1	82.6	13.1	88.0	14.0	98.7	15.9	109	17.9
		14	55.7	8.89	66.5	10.6	77.2	12.4	82.6	13.3	88.0	14.2	98.7	16.2	109	18.2
		16	55.7	9.03	66.5	10.8	77.2	12.6	82.6	13.5	88.0	14.5	98.7	16.5	109	18.6
		18	55.7	9.18	66.5	10.9	77.2	12.8	82.6	13.8	88.0	14.8	98.7	16.8	109	19.0
		20	55.7	9.33	66.5	11.1	77.2	13.1	82.6	14.1	88.0	15.1	98.7	17.2	109	19.5
		21	55.7	9.41	66.5	11.2	77.2	13.2	82.6	14.2	88.0	15.2	98.7	17.4	109	20.2
		23	55.7	9.58	66.5	11.5	77.2	13.5	82.6	14.7	88.0	15.9	98.7	18.7	109	21.6
		25	55.7	9.75	66.5	11.9	77.2	14.3	82.6	15.7	88.0	17.0	98.7	20.0	109	23.1
		27	55.7	10.3	66.5	12.7	77.2	15.3	82.6	16.7	88.0	18.2	98.7	21.3	109	24.7
		29	55.7	10.9	66.5	13.5	77.2	16.3	82.6	17.8	88.0	19.4	98.7	22.7	109	26.4
		31	55.7	11.6	66.5	14.3	77.2	17.3	82.6	18.9	88.0	20.6	98.7	24.2	109	28.1
		33	55.7	12.3	66.5	15.2	77.2	18.4	82.6	20.1	88.0	22.0	98.7	25.8	109	30.0
		35	55.7	13.0	66.5	16.1	77.2	19.6	82.6	21.4	88.0	23.4	98.7	27.5	109	32.0
		37	55.7	13.8	66.5	17.1	77.2	20.8	82.6	22.8	88.0	24.8	98.7	29.3	109	34.1
		39	55.7	14.6	66.5	18.1	77.2	22.1	82.6	24.2	88.0	26.4	98.7	31.1	109	36.3
60	630 (70.80)	10	47.8	7.50	57.0	8.80	66.2	10.2	70.8	10.9	75.4	11.6	84.6	13.2	93.8	14.8
		12	47.8	7.60	57.0	8.94	66.2	10.4	70.8	11.1	75.4	11.8	84.6	13.4	93.8	15.0
		14	47.8	7.71	57.0	9.08	66.2	10.5	70.8	11.3	75.4	12.1	84.6	13.6	93.8	15.3
		16	47.8	7.83	57.0	9.22	66.2	10.7	70.8	11.5	75.4	12.3	84.6	13.9	93.8	15.6
		18	47.8	7.95	57.0	9.38	66.2	10.9	70.8	11.7	75.4	12.5	84.6	14.2	93.8	15.9
		20	47.8	8.07	57.0	9.53	66.2	11.1	70.8	11.9	75.4	12.7	84.6	14.4	93.8	16.2
		21	47.8	8.14	57.0	9.62	66.2	11.2	70.8	12.0	75.4	12.8	84.6	14.6	93.8	16.4
		23	47.8	8.27	57.0	9.79	66.2	11.4	70.8	12.2	75.4	13.1	84.6	15.1	93.8	17.4
		25	47.8	8.41	57.0	9.96	66.2	11.8	70.8	12.9	75.4	13.9	84.6	16.2	93.8	18.6
		27	47.8	8.72	57.0	10.6	66.2	12.6	70.8	13.7	75.4	14.8	84.6	17.2	93.8	19.8
		29	47.8	9.24	57.0	11.2	66.2	13.4	70.8	14.6	75.4	15.8	84.6	18.4	93.8	21.2
		31	47.8	9.78	57.0	11.9	66.2	14.2	70.8	15.5	75.4	16.8	84.6	19.6	93.8	22.6
		33	47.8	10.3	57.0	12.6	66.2	15.1	70.8	16.4	75.4	17.8	84.6	20.8	93.8	24.0
		35	47.8	10.9	57.0	13.4	66.2	16.0	70.8	17.5	75.4	18.9	84.6	22.1	93.8	25.6
		37	47.8	11.6	57.0	14.1	66.2	17.0	70.8	18.5	75.4	20.1	84.6	23.5	93.8	27.2
		39	47.8	12.2	57.0	15.0	66.2	18.0	70.8	19.6	75.4	21.4	84.6	25.0	93.8	28.9
50	525 (59.00)	10	39.8	6.44	47.5	7.46	55.2	8.53	59.0	9.09	62.8	9.67	70.5	10.9	78.2	12.1
		12	39.8	6.53	47.5	7.56	55.2	8.66	59.0	9.24	62.8	9.82	70.5	11.0	78.2	12.3
		14	39.8	6.61	47.5	7.67	55.2	8.80	59.0	9.39	62.8	9.99	70.5	11.2	78.2	12.5
		16	39.8	6.70	47.5	7.79	55.2	8.94	59.0	9.54	62.8	10.2	70.5	11.4	78.2	12.8
		18	39.8	6.80	47.5	7.91	55.2	9.09	59.0	9.70	62.8	10.3	70.5	11.6	78.2	13.0
		20	39.8	6.89	47.5	8.03	55.2	9.24	59.0	9.87	62.8	10.5	70.5	11.8	78.2	13.2
		21	39.8	6.94	47.5	8.09	55.2	9.32	59.0	9.95	62.8	10.6	70.5	12.0	78.2	13.4
		23	39.8	7.05	47.5	8.23	55.2	9.48	59.0	10.1	62.8	10.8	70.5	12.2	78.2	13.7
		25	39.8	7.16	47.5	8.36	55.2	9.65	59.0	10.3	62.8	11.1	70.5	12.8	78.2	14.6
		27	39.8	7.27	47.5	8.66	55.2	10.2	59.0	11.0	62.8	11.8	70.5	13.6	78.2	15.5
		29	39.8	7.69	47.5	9.18	55.2	10.8	59.0	11.7	62.8	12.6	70.5	14.5	78.2	16.5
		31	39.8	8.13	47.5	9.72	55.2	11.5	59.0	12.4	62.8	13.4	70.5	15.4	78.2	17.6
		33	39.8	8.58	47.5	10.3	55.2	12.1	59.0	13.1	62.8	14.2	70.5	16.4	78.2	18.7
		35	39.8	9.06	47.5	10.9	55.2	12.9	59.0	13.9	62.8	15.0	70.5	17.4	78.2	19.9
		37	39.8	9.55	47.5	11.5	55.2	13.6	59.0	14.7	62.8	15.9	70.5	18.4	78.2	21.1
		39	39.8	10.1	47.5	12.1	55.2	14.4	59.0	15.6	62.8	16.9	70.5	19.5	78.2	22.4

4TW31482-1A

4 Capacity tables

4 - 2 Cooling capacity tables

REYQ44P8

TC: Total Capacity: kW ; PI: Power Input: kW (compressor + outdoor fan motor)

Combination (%)	Capacity index (kW)	Outdoor air temp. (°CDB)	Indoor air temperature: 14.0 °CWB 20.0 °CDB TC kW	14.0 °CWB 20.0 °CDB PI kW	16.0 °CWB 23.0 °CDB TC kW	16.0 °CWB 23.0 °CDB PI kW	18.0 °CWB 26.0 °CDB TC kW	18.0 °CWB 26.0 °CDB PI kW	19.0 °CWB 27.0 °CDB TC kW	19.0 °CWB 27.0 °CDB PI kW	20.0 °CWB 28.0 °CDB TC kW	20.0 °CWB 28.0 °CDB PI kW	22.0 °CWB 30.0 °CDB TC kW	22.0 °CWB 30.0 °CDB PI kW	24.0 °CWB 32.0 °CDB TC kW	24.0 °CWB 32.0 °CDB PI kW
130	1430	10	109	17.5	130	21.4	151	25.5	156	25.5	158	25.5	162	25.5	166	25.5
	(161.20)	12	109	17.8	130	21.8	151	26.0	154	26.0	156	26.0	160	26.0	164	26.0
		14	109	18.2	130	22.2	150	26.3	152	26.3	154	26.3	158	26.3	162	26.3
		16	109	18.5	130	22.7	148	26.2	150	26.3	152	26.3	156	26.3	160	26.3
		18	109	18.9	130	23.1	146	27.2	148	27.3	150	27.4	154	27.7	158	28.0
		20	109	19.2	130	24.6	144	28.5	146	28.6	148	28.8	152	29.0	156	29.3
		21	109	19.8	130	25.5	143	29.1	145	29.3	147	29.4	151	29.7	155	30.0
		23	109	21.2	130	27.4	141	30.5	143	30.6	145	30.8	149	31.1	153	31.4
		25	109	22.7	130	29.3	139	31.8	141	32.0	143	32.1	147	32.5	151	32.8
		27	109	24.2	130	31.3	137	33.1	139	33.3	141	33.5	145	33.8	149	34.2
		29	109	25.8	130	33.5	135	34.5	137	34.7	139	34.9	143	35.2	147	35.6
		31	109	27.5	129	35.4	133	35.8	135	36.0	137	36.2	141	36.6	145	37.0
		33	109	29.4	127	36.8	131	37.2	133	37.4	135	37.6	139	38.0	143	38.4
		35	109	31.3	125	38.1	129	38.6	131	38.8	133	39.0	137	39.4	141	39.9
		37	109	33.3	123	39.5	127	39.9	129	40.2	131	40.4	135	40.8	139	41.3
		39	109	35.5	121	40.8	125	41.3	127	41.5	129	41.8	133	42.3	137	42.8
120	1320	10	100	16.0	120	19.5	139	23.2	149	25.1	156	25.1	159	25.1	163	25.1
	(148.80)	12	100	16.3	120	19.9	139	23.7	149	25.6	154	25.6	157	25.6	161	25.6
		14	100	16.6	120	20.3	139	24.1	149	26.1	152	26.1	155	26.1	159	26.1
		16	100	16.9	120	20.7	139	24.6	148	26.3	150	26.3	153	26.3	157	26.3
		18	100	17.2	120	21.1	139	25.4	146	27.1	148	27.3	151	27.5	155	27.8
		20	100	17.6	120	21.9	139	27.3	144	28.5	146	28.6	149	28.8	153	29.1
		21	100	17.7	120	22.7	139	28.3	143	29.1	145	29.3	148	29.5	152	29.8
		23	100	18.9	120	24.3	139	30.3	141	30.4	143	30.6	146	30.9	150	31.2
		25	100	20.2	120	26.0	137	31.6	139	31.8	141	31.9	144	32.2	148	32.5
		27	100	21.6	120	27.8	135	33.0	137	33.1	139	33.3	142	33.6	146	33.9
		29	100	23.1	120	29.7	133	34.3	135	34.5	137	34.6	140	35.0	144	35.3
		31	100	24.6	120	31.7	131	35.6	133	35.8	134	36.0	138	36.3	142	36.7
		33	100	26.2	120	33.8	129	37.0	131	37.2	132	37.3	136	37.7	140	38.1
		35	100	27.9	120	36.1	127	38.3	129	38.5	130	38.7	134	39.1	138	39.5
		37	100	29.6	120	38.4	125	39.7	127	39.9	128	40.1	132	40.5	136	40.9
		39	100	31.5	119	40.6	123	41.0	125	41.3	126	41.5	130	41.9	134	42.4
110	1210	10	92.1	14.5	110	17.7	128	21.0	136	22.7	145	24.4	157	25.0	160	25.0
	(136.40)	12	92.1	14.8	110	18.0	128	21.4	136	23.1	145	24.9	154	25.5	158	25.5
		14	92.1	15.0	110	18.3	128	21.8	136	23.6	145	25.4	152	25.9	156	25.9
		16	92.1	15.3	110	18.7	128	22.2	136	24.0	145	25.8	150	26.3	154	26.3
		18	92.1	15.6	110	19.1	128	22.7	136	24.7	145	27.1	148	27.3	152	27.5
		20	92.1	15.9	110	19.4	128	24.0	136	26.5	143	28.4	146	28.6	150	28.9
		21	92.1	16.1	110	20.0	128	24.9	136	27.5	142	29.1	145	29.3	149	29.6
		23	92.1	16.8	110	21.5	128	26.7	136	29.5	140	30.4	143	30.7	147	30.9
		25	92.1	18.0	110	22.9	128	28.5	136	31.6	138	31.7	141	32.0	145	32.3
		27	92.1	19.2	110	24.5	128	30.5	134	32.9	136	33.1	139	33.4	143	33.6
		29	92.1	20.4	110	26.2	128	32.6	132	34.2	134	34.4	137	34.7	141	35.0
		31	92.1	21.8	110	27.9	128	34.8	130	35.6	132	35.7	135	36.1	139	36.4
		33	92.1	23.2	110	29.8	127	36.7	128	36.9	130	37.1	133	37.4	137	37.8
		35	92.1	24.6	110	31.7	125	38.1	126	38.3	128	38.4	131	38.8	135	39.2
		37	92.1	26.2	110	33.8	123	39.4	124	39.6	126	39.8	129	40.2	133	40.6
		39	92.1	27.9	110	35.9	121	40.8	122	41.0	124	41.2	127	41.6	131	42.0
100	1100	10	83.7	13.1	99.8	15.9	116	18.8	124	20.3	132	21.9	148	25.0	157	25.0
	(124.00)	12	83.7	13.3	99.8	16.2	116	19.2	124	20.7	132	22.3	148	25.5	155	25.5
		14	83.7	13.6	99.8	16.5	116	19.5	124	21.1	132	22.7	148	25.9	153	25.9
		16	83.7	13.8	99.8	16.8	116	19.9	124	21.5	132	23.1	148	26.3	151	26.3
		18	83.7	14.1	99.8	17.1	116	20.3	124	21.9	132	23.6	146	27.1	149	27.3
		20	83.7	14.3	99.8	17.4	116	20.9	124	23.0	132	25.3	144	28.4	147	28.7
		21	83.7	14.5	99.8	17.6	116	21.7	124	23.9	132	26.2	143	29.1	146	29.3
		23	83.7	14.9	99.8	18.8	116	23.2	124	25.6	132	28.1	141	30.4	144	30.7
		25	83.7	15.8	99.8	20.1	116	24.8	124	27.4	132	30.1	139	31.8	142	32.0
		27	83.7	16.9	99.8	21.4	116	26.5	124	29.3	132	32.2	137	33.1	140	33.4
		29	83.7	18.0	99.8	22.9	116	28.3	124	31.3	132	34.2	135	34.4	138	34.7
		31	83.7	19.1	99.8	24.4	116	30.2	124	33.4	130	35.5	133	35.8	136	36.1
		33	83.7	20.4	99.8	25.9	116	32.2	124	35.6	128	36.8	131	37.1	134	37.5
		35	83.7	21.6	99.8	27.6	116	34.4	124	38.0	126	38.2	129	38.5	132	38.8
		37	83.7	23.0	99.8	29.4	116	36.6	122	39.3	123	39.5	127	39.9	130	40.2
		39	83.7	24.4	99.8	31.3	116	39.0	120	40.7	121	40.9	124	41.2	128	41.6

4TW31482-1A

NOTES - ANMERKUNGEN - Σημειώσεις - NOTAS - REMARQUES - NOTE - OPMERKINGEN - примечания - NOTLAR

1 The above table shows the average value of conditions which may occur.
Die obige Tabelle zeigt den Durchschnittswert der Bedingungen, die auftreten können.
Στον παραπάνω πίνακα αναγράφεται η μέση τιμή για συνθήκες που μπορεί να προκύψουν.
La tabla de arriba muestra el valor medio de condiciones que pueden ocurrir.
Le tableau ci-dessus donne la valeur moyenne pour des conditions qui peuvent survenir.
La tabella in alto mostra il valore delle condizioni medie che si possono riscontrare.
De tabel hierboven geeft de gemiddelde waarde aan van situaties die kunnen voorvallen.
Таблица расположенная выше показывает среднее значение условий, которые могут наступить.
Yukarıdaki tablo meydana gelebilecek koşulların ortalama değerini göstermektedir.

4 Capacity tables

4 - 2 Cooling capacity tables

REYQ44P8

TC: Total Capacity: kW ; PI: Power Input: kW (compressor + outdoor fan motor)

Combination (%)	Capacity index (kW)	Outdoor air temp. (°CDB)	Indoor air temperature: 14.0 °CWB / 20.0 °CDB		16.0 °CWB / 23.0 °CDB		18.0 °CWB / 26.0 °CDB		19.0 °CWB / 27.0 °CDB		20.0 °CWB / 28.0 °CDB		22.0 °CWB / 30.0 °CDB		24.0 °CWB / 32.0 °CDB	
			TC	PI	TC	PI	TC	PI	TC	PI	TC	PI	TC	PI	TC	PI
			kW	kW	kW	kW	kW	kW	kW	kW	kW	kW	kW	kW	kW	kW
90	990	10	75.3	11.7	89.8	14.1	104	16.7	112	18.0	119	19.4	133	22.1	148	24.9
	(111.60)	12	75.3	11.9	89.8	14.4	104	17.0	112	18.3	119	19.7	133	22.5	148	25.4
		14	75.3	12.1	89.8	14.6	104	17.3	112	18.7	119	20.1	133	23.0	148	25.9
		16	75.3	12.3	89.8	14.9	104	17.6	112	19.1	119	20.5	133	23.4	148	26.3
		18	75.3	12.6	89.8	15.2	104	18.0	112	19.4	119	20.9	133	23.9	146	27.1
		20	75.3	12.8	89.8	15.5	104	18.3	112	19.8	119	21.7	133	25.7	144	28.4
		21	75.3	12.9	89.8	15.6	104	18.7	112	20.5	119	22.4	133	26.6	143	29.1
		23	75.3	13.2	89.8	16.3	104	20.0	112	22.0	119	24.0	133	28.5	141	30.4
		25	75.3	13.9	89.8	17.4	104	21.4	112	23.5	119	25.7	133	30.5	139	31.8
		27	75.3	14.8	89.8	18.6	104	22.8	112	25.1	119	27.5	133	32.7	137	33.1
		29	75.3	15.7	89.8	19.8	104	24.3	112	26.8	119	29.4	132	34.2	135	34.4
		31	75.3	16.7	89.8	21.1	104	25.9	112	28.6	119	31.4	130	35.5	133	35.8
		33	75.3	17.7	89.8	22.4	104	27.6	112	30.5	119	33.4	128	36.9	130	37.1
		35	75.3	18.8	89.8	23.8	104	29.4	112	32.5	119	35.7	126	38.2	128	38.5
		37	75.3	20.0	89.8	25.3	104	31.3	112	34.6	119	38.0	124	39.5	126	39.9
		39	75.3	21.2	89.8	26.9	104	33.3	112	36.8	119	40.5	122	40.9	124	41.2
80	880	10	66.9	10.4	79.8	12.5	92.8	14.6	99.2	15.8	106	16.9	119	19.3	131	21.7
	(99.20)	12	66.9	10.6	79.8	12.7	92.8	14.9	99.2	16.1	106	17.2	119	19.7	131	22.2
		14	66.9	10.7	79.8	12.9	92.8	15.2	99.2	16.4	106	17.6	119	20.0	131	22.6
		16	66.9	10.9	79.8	13.1	92.8	15.5	99.2	16.7	106	17.9	119	20.4	131	23.0
		18	66.9	11.1	79.8	13.4	92.8	15.8	99.2	17.0	106	18.2	119	20.8	131	23.5
		20	66.9	11.3	79.8	13.6	92.8	16.1	99.2	17.3	106	18.6	119	21.6	131	25.1
		21	66.9	11.4	79.8	13.7	92.8	16.2	99.2	17.5	106	19.0	119	22.4	131	26.0
		23	66.9	11.6	79.8	14.0	92.8	17.0	99.2	18.6	106	20.3	119	24.0	131	27.9
		25	66.9	12.0	79.8	14.9	92.8	18.2	99.2	19.9	106	21.7	119	25.6	131	29.9
		27	66.9	12.8	79.8	15.9	92.8	19.4	99.2	21.2	106	23.2	119	27.4	131	32.0
		29	66.9	13.6	79.8	16.9	92.8	20.6	99.2	22.7	106	24.8	119	29.3	131	34.2
		31	66.9	14.4	79.8	18.0	92.8	22.0	99.2	24.1	106	26.4	119	31.2	129	35.5
		33	66.9	15.3	79.8	19.1	92.8	23.4	99.2	25.7	106	28.1	119	33.3	127	36.8
		35	66.9	16.2	79.8	20.3	92.8	24.9	99.2	27.4	106	30.0	119	35.5	125	38.2
		37	66.9	17.2	79.8	21.6	92.8	26.5	99.2	29.1	106	31.9	119	37.8	123	39.5
		39	66.9	18.2	79.8	22.9	92.8	28.2	99.2	31.0	106	34.0	119	40.3	121	40.9
70	770	10	58.6	9.15	69.9	10.9	81.2	12.7	86.8	13.6	92.4	14.6	104	16.6	115	18.6
	(86.80	12	58.6	9.29	69.9	11.0	81.2	12.9	86.8	13.9	92.4	14.8	104	16.9	115	19.0
		14	58.6	9.43	69.9	11.2	81.2	13.1	86.8	14.1	92.4	15.1	104	17.2	115	19.4
		16	58.6	9.58	69.9	11.4	81.2	13.4	86.8	14.4	92.4	15.4	104	17.5	115	19.7
		18	58.6	9.74	69.9	11.6	81.2	13.6	86.8	14.6	92.4	15.7	104	17.9	115	20.1
		20	58.6	9.91	69.9	11.8	81.2	13.9	86.8	14.9	92.4	16.0	104	18.2	115	20.7
		21	58.6	9.99	69.9	11.9	81.2	14.0	86.8	15.1	92.4	16.2	104	18.5	115	21.4
		23	58.6	10.2	69.9	12.2	81.2	14.3	86.8	15.6	92.4	16.9	104	19.8	115	22.9
		25	58.6	10.3	69.9	12.6	81.2	15.2	86.8	16.6	92.4	18.1	104	21.2	115	24.5
		27	58.6	10.9	69.9	13.4	81.2	16.2	86.8	17.7	92.4	19.3	104	22.6	115	26.2
		29	58.6	11.6	69.9	14.3	81.2	17.3	86.8	18.9	92.4	20.6	104	24.1	115	28.0
		31	58.6	12.3	69.9	15.2	81.2	18.4	86.8	20.1	92.4	21.9	104	25.7	115	29.9
		33	58.6	13.0	69.9	16.1	81.2	19.5	86.8	21.4	92.4	23.3	104	27.4	115	31.9
		35	58.6	13.8	69.9	17.1	81.2	20.8	86.8	22.7	92.4	24.8	104	29.2	115	33.9
		37	58.6	14.6	69.9	18.1	81.2	22.0	86.8	24.2	92.4	26.4	104	31.1	115	36.2
		39	58.6	15.5	69.9	19.2	81.2	23.4	86.8	25.7	92.4	28.0	104	33.1	115	38.5
60	660	10	50.2	7.96	59.9	9.34	69.6	10.8	74.4	11.6	79.2	12.4	88.9	14.0	98.6	15.7
	(74.40)	12	50.2	8.07	59.9	9.48	69.6	11.0	74.4	11.8	79.2	12.6	88.9	14.2	98.6	15.9
		14	50.2	8.19	59.9	9.63	69.6	11.2	74.4	12.0	79.2	12.8	88.9	14.5	98.6	16.2
		16	50.2	8.31	59.9	9.79	69.6	11.4	74.4	12.2	79.2	13.0	88.9	14.8	98.6	16.6
		18	50.2	8.44	59.9	9.95	69.6	11.6	74.4	12.4	79.2	13.3	88.9	15.0	98.6	16.9
		20	50.2	8.57	59.9	10.1	69.6	11.8	74.4	12.6	79.2	13.5	88.9	15.3	98.6	17.2
		21	50.2	8.64	59.9	10.2	69.6	11.9	74.4	12.7	79.2	13.6	88.9	15.5	98.6	17.4
		23	50.2	8.78	59.9	10.4	69.6	12.1	74.4	13.0	79.2	13.9	88.9	16.1	98.6	18.5
		25	50.2	8.93	59.9	10.6	69.6	12.6	74.4	13.6	79.2	14.8	88.9	17.2	98.6	19.7
		27	50.2	9.25	59.9	11.2	69.6	13.4	74.4	14.5	79.2	15.7	88.9	18.3	98.6	21.1
		29	50.2	9.80	59.9	11.9	69.6	14.2	74.4	15.5	79.2	16.8	88.9	19.5	98.6	22.5
		31	50.2	10.4	59.9	12.6	69.6	15.1	74.4	16.4	79.2	17.8	88.9	20.8	98.6	23.9
		33	50.2	11.0	59.9	13.4	69.6	16.0	74.4	17.5	79.2	18.9	88.9	22.1	98.6	25.5
		35	50.2	11.6	59.9	14.2	69.6	17.0	74.4	18.5	79.2	20.1	88.9	23.5	98.6	27.1
		37	50.2	12.3	59.9	15.0	69.6	18.0	74.4	19.7	79.2	21.4	88.9	25.0	98.6	28.9
		39	50.2	13.0	59.9	15.9	69.6	19.1	74.4	20.9	79.2	22.7	88.9	26.5	98.6	30.7
50	550	10	41.8	6.84	49.9	7.92	58.0	9.06	62.0	9.65	66.0	10.3	74.1	11.5	82.2	12.8
	(62.00)	12	41.8	6.93	49.9	8.03	58.0	9.20	62.0	9.81	66.0	10.4	74.1	11.7	82.2	13.1
		14	41.8	7.02	49.9	8.14	58.0	9.34	62.0	9.96	66.0	10.6	74.1	11.9	82.2	13.3
		16	41.8	7.12	49.9	8.27	58.0	9.49	62.0	10.1	66.0	10.8	74.1	12.1	82.2	13.5
		18	41.8	7.21	49.9	8.39	58.0	9.64	62.0	10.3	66.0	11.0	74.1	12.3	82.2	13.8
		20	41.8	7.32	49.9	8.52	58.0	9.81	62.0	10.5	66.0	11.2	74.1	12.6	82.2	14.0
		21	41.8	7.37	49.9	8.59	58.0	9.89	62.0	10.6	66.0	11.3	74.1	12.7	82.2	14.2
		23	41.8	7.48	49.9	8.73	58.0	10.1	62.0	10.8	66.0	11.5	74.1	12.9	82.2	14.5
		25	41.8	7.60	49.9	8.88	58.0	10.2	62.0	11.0	66.0	11.8	74.1	13.6	82.2	15.5
		27	41.8	7.72	49.9	9.19	58.0	10.8	62.0	11.7	66.0	12.6	74.1	14.5	82.2	16.5
		29	41.8	8.16	49.9	9.74	58.0	11.5	62.0	12.4	66.0	13.3	74.1	15.4	82.2	17.6
		31	41.8	8.63	49.9	10.3	58.0	12.2	62.0	13.1	66.0	14.2	74.1	16.3	82.2	18.7
		33	41.8	9.11	49.9	10.9	58.0	12.9	62.0	13.9	66.0	15.0	74.1	17.4	82.2	19.9
		35	41.8	9.61	49.9	11.5	58.0	13.6	62.0	14.8	66.0	15.9	74.1	18.4	82.2	21.1
		37	41.8	10.1	49.9	12.2	58.0	14.4	62.0	15.6	66.0	16.9	74.1	19.6	82.2	22.4
		39	41.8	10.7	49.9	12.9	58.0	15.3	62.0	16.6	66.0	17.9	74.1	20.7	82.2	23.8

4TW31482-1A

4 Capacity tables

4 - 2 Cooling capacity tables

REYQ46P8

TC: Total Capacity: kW ; PI: Power Input: kW (compressor + outdoor fan motor)

Combination (%)	Capacity index (kW)	Outdoor air temp. (°CDB)	Indoor air temperature: 14.0 °CWB, 20.0 °CDB		16.0 °CWB, 23.0 °CDB		18.0 °CWB, 26.0 °CDB		19.0 °CWB, 27.0 °CDB		20.0 °CWB, 28.0 °CDB		22.0 °CWB, 30.0 °CDB		24.0 °CWB, 32.0 °CDB	
			TC	PI	TC	PI	TC	PI	TC	PI	TC	PI	TC	PI	TC	PI
			kW	kW	kW	kW	kW	kW	kW	kW	kW	kW	kW	kW	kW	kW
130	1495	10	114	18.8	136	23.0	158	27.4	164	27.4	166	27.4	170	27.4	174	27.4
	(169.00)	12	114	19.1	136	23.4	158	27.9	162	27.9	164	27.9	168	27.9	172	27.9
		14	114	19.5	136	23.9	157	28.2	160	28.2	162	28.2	166	28.2	170	28.2
		16	114	19.9	136	24.3	155	28.1	157	28.2	159	28.2	164	28.2	168	28.2
		18	114	20.3	136	24.8	153	29.2	155	29.3	157	29.4	161	29.7	166	30.0
		20	114	20.7	136	26.4	151	30.6	153	30.7	155	30.9	159	31.2	163	31.5
		21	114	21.2	136	27.4	150	31.3	152	31.4	154	31.6	158	31.9	162	32.2
		23	114	22.7	136	29.4	148	32.7	150	32.9	152	33.1	156	33.4	160	33.7
		25	114	24.3	136	31.5	146	34.2	148	34.3	150	34.5	154	34.9	158	35.2
		27	114	26.0	136	33.6	144	35.6	146	35.8	148	36.0	152	36.3	156	36.7
		29	114	27.7	136	36.0	142	37.0	144	37.2	146	37.4	150	37.8	154	38.2
		31	114	29.6	135	38.1	139	38.5	142	38.7	144	38.9	148	39.3	152	39.7
		33	114	31.5	133	39.5	137	39.9	139	40.2	141	40.4	146	40.8	150	41.3
		35	114	33.6	131	40.9	135	41.4	137	41.6	139	41.9	143	42.3	148	42.8
		37	114	35.8	129	42.4	133	42.9	135	43.1	137	43.4	141	43.9	145	44.4
		39	114	38.1	127	43.8	131	44.3	133	44.6	135	44.9	139	45.4	143	45.9
120	1380	10	105	17.2	126	21.0	146	24.9	156	27.0	163	27.0	167	27.0	171	27.0
	(156.00)	12	105	17.5	126	21.4	146	25.4	156	27.5	161	27.5	165	27.5	169	27.5
		14	105	17.8	126	21.8	146	25.9	156	28.0	159	28.0	163	28.0	167	28.0
		16	105	18.1	126	22.2	146	26.4	155	28.2	157	28.2	161	28.2	164	28.2
		18	105	18.5	126	22.6	146	27.3	153	29.1	155	29.3	159	29.5	162	29.8
		20	105	18.9	126	23.5	146	29.3	151	30.6	153	30.7	156	31.0	160	31.3
		21	105	19.0	126	24.4	146	30.4	150	31.3	152	31.4	155	31.7	159	32.0
		23	105	20.3	126	26.1	146	32.5	148	32.7	149	32.8	153	33.2	157	33.5
		25	105	21.7	126	27.9	144	34.0	145	34.1	147	34.3	151	34.6	155	34.9
		27	105	23.2	126	29.9	141	35.4	143	35.6	145	35.7	149	36.1	153	36.4
		29	105	24.7	126	31.9	139	36.8	141	37.0	143	37.2	147	37.5	151	37.9
		31	105	26.4	126	34.0	137	38.2	139	38.4	141	38.6	145	39.0	149	39.4
		33	105	28.1	126	36.3	135	39.7	137	39.9	139	40.1	143	40.5	146	40.9
		35	105	29.9	126	38.7	133	41.1	135	41.4	137	41.6	141	42.0	144	42.4
		37	105	31.8	126	41.3	131	42.6	133	42.8	135	43.1	138	43.5	142	44.0
		39	105	33.9	125	43.6	129	44.1	131	44.3	133	44.5	136	45.0	140	45.5
110	1265	10	96.5	15.6	115	19.0	134	22.5	143	24.4	152	26.2	164	26.8	168	26.8
	(143.00)	12	96.5	15.9	115	19.3	134	23.0	143	24.8	152	26.7	162	27.3	165	27.3
		14	96.5	16.2	115	19.7	134	23.4	143	25.3	152	27.2	160	27.9	163	27.9
		16	96.5	16.5	115	20.1	134	23.9	143	25.8	152	27.7	158	28.2	161	28.2
		18	96.5	16.8	115	20.5	134	24.3	143	26.5	152	29.1	156	29.3	159	29.6
		20	96.5	17.1	115	20.9	134	25.8	143	28.5	150	30.5	154	30.8	157	31.0
		21	96.5	17.3	115	21.5	134	26.7	143	29.5	149	31.2	152	31.5	156	31.7
		23	96.5	18.1	115	23.0	134	28.6	143	31.7	147	32.6	150	32.9	154	33.2
		25	96.5	19.3	115	24.6	134	30.6	143	33.9	145	34.1	148	34.4	152	34.7
		27	96.5	20.6	115	26.3	134	32.8	141	35.3	143	35.5	146	35.8	150	36.1
		29	96.5	21.9	115	28.1	134	35.0	139	36.8	141	36.9	144	37.3	147	37.6
		31	96.5	23.4	115	30.0	134	37.4	137	38.2	138	38.4	142	38.7	145	39.1
		33	96.5	24.9	115	31.9	133	39.4	135	39.6	136	39.8	140	40.2	143	40.6
		35	96.5	26.5	115	34.0	131	40.9	132	41.1	134	41.3	138	41.7	141	42.1
		37	96.5	28.1	115	36.2	129	42.3	130	42.5	132	42.7	136	43.2	139	43.6
		39	96.5	29.9	115	38.6	126	43.8	128	44.0	130	44.2	133	44.7	137	45.1
100	1150	10	87.7	14.1	105	17.0	122	20.2	130	21.8	138	23.5	155	26.8	164	26.8
	(130.00)	12	87.7	14.3	105	17.4	122	20.6	130	22.2	138	23.9	155	27.3	162	27.3
		14	87.7	14.6	105	17.7	122	21.0	130	22.7	138	24.4	155	27.9	160	27.9
		16	87.7	14.8	105	18.0	122	21.4	130	23.1	138	24.8	155	28.2	158	28.2
		18	87.7	15.1	105	18.4	122	21.8	130	23.6	138	25.3	153	29.1	156	29.3
		20	87.7	15.4	105	18.7	122	22.5	130	24.7	138	27.1	151	30.5	154	30.8
		21	87.7	15.5	105	18.9	122	23.3	130	25.6	138	28.1	150	31.3	153	31.5
		23	87.7	15.9	105	20.2	122	24.9	130	27.5	138	30.2	147	32.7	151	32.9
		25	87.7	17.0	105	21.6	122	26.6	130	29.4	138	32.3	145	34.1	148	34.4
		27	87.7	18.1	105	23.0	122	28.5	130	31.4	138	34.5	143	35.5	146	35.8
		29	87.7	19.3	105	24.5	122	30.4	130	33.6	138	36.7	141	37.0	144	37.3
		31	87.7	20.5	105	26.2	122	32.4	130	35.9	136	38.1	139	38.4	142	38.8
		33	87.7	21.9	105	27.9	122	34.6	130	38.3	134	39.5	137	39.9	140	40.2
		35	87.7	23.2	105	29.6	122	36.9	130	40.8	132	41.0	135	41.3	138	41.7
		37	87.7	24.7	105	31.5	122	39.3	128	42.2	129	42.4	133	42.8	136	43.2
		39	87.7	26.2	105	33.6	122	41.9	126	43.7	127	43.9	131	44.3	134	44.7

4TW31482-1A

NOTES - ANMERKUNGEN - Σημειώσεις - NOTAS - REMARQUES - NOTE - OPMERKINGEN - примечания - NOTLAR

1 The above table shows the average value of conditions which may occur.
Die obige Tabelle zeigt den Durchschnittswert der Bedingungen, die auftreten können.
Στον παραπάνω πίνακα αναγράφεται η μέση τιμή για συνθήκες που μπορεί να προκύψουν.
La tabla de arriba muestra el valor medio de condiciones que pueden ocurrir.
Le tableau ci-dessus donne la valeur moyenne pour des conditions qui peuvent survenir.
La tabella in alto mostra il valore delle condizioni medie che si possono riscontrare.
De tabel hierboven geeft de gemiddelde waarde aan van situaties die kunnen voorvallen.
Таблица расположенная выше показывает среднее значение условий, которые могут наступить.
Yukarıdaki tablo meydana gelebilecek koşulların ortalama değerini göstermektedir.

4 Capacity tables

4 - 2 Cooling capacity tables

REYQ46P8

TC: Total Capacity: kW ; PI: Power Input: kW (compressor + outdoor fan motor)

Combination (%)	Capacity index (kW)	Outdoor air temp. (°CDB)	Indoor air temperature: 14.0 °CWB / 20.0 °CDB		16.0 °CWB / 23.0 °CDB		18.0 °CWB / 26.0 °CDB		19.0 °CWB / 27.0 °CDB		20.0 °CWB / 28.0 °CDB		22.0 °CWB / 30.0 °CDB		24.0 °CWB / 32.0 °CDB	
			TC	PI	TC	PI	TC	PI	TC	PI	TC	PI	TC	PI	TC	PI
			kW	kW	kW	kW	kW	kW	kW	kW	kW	kW	kW	kW	kW	kW
90	1035 (117.00)	10	79.0	12.6	94.2	15.2	109	17.9	117	19.3	125	20.8	140	23.7	155	26.8
		12	79.0	12.8	94.2	15.4	109	18.2	117	19.7	125	21.2	140	24.2	155	27.3
		14	79.0	13.0	94.2	15.7	109	18.6	117	20.1	125	21.6	140	24.7	155	27.8
		16	79.0	13.2	94.2	16.0	109	18.9	117	20.5	125	22.0	140	25.1	155	28.2
		18	79.0	13.5	94.2	16.3	109	19.3	117	20.9	125	22.4	140	25.6	153	29.1
		20	79.0	13.7	94.2	16.6	109	19.7	117	21.3	125	23.3	140	27.5	151	30.5
		21	79.0	13.9	94.2	16.8	109	20.0	117	22.0	125	24.1	140	28.5	149	31.3
		23	79.0	14.1	94.2	17.5	109	21.4	117	23.6	125	25.8	140	30.6	147	32.7
		25	79.0	14.9	94.2	18.7	109	22.9	117	25.2	125	27.6	140	32.8	145	34.1
		27	79.0	15.8	94.2	19.9	109	24.5	117	26.9	125	29.5	140	35.1	143	35.5
		29	79.0	16.9	94.2	21.2	109	26.1	117	28.8	125	31.5	138	36.7	141	37.0
		31	79.0	17.9	94.2	22.6	109	27.9	117	30.7	125	33.7	136	38.1	139	38.4
		33	79.0	19.0	94.2	24.0	109	29.7	117	32.7	125	35.9	134	39.6	137	39.9
		35	79.0	20.2	94.2	25.6	109	31.6	117	34.9	125	38.3	132	41.0	135	41.3
		37	79.0	21.4	94.2	27.2	109	33.6	117	37.1	125	40.8	130	42.5	133	42.8
		39	79.0	22.8	94.2	28.9	109	35.8	117	39.5	125	43.5	128	43.9	130	44.3
80	920 (104.00)	10	70.2	11.2	83.7	13.4	97.2	15.7	104	16.9	111	18.2	124	20.7	138	23.3
		12	70.2	11.4	83.7	13.6	97.2	16.0	104	17.2	111	18.5	124	21.1	138	23.8
		14	70.2	11.5	83.7	13.8	97.2	16.3	104	17.6	111	18.9	124	21.5	138	24.2
		16	70.2	11.7	83.7	14.1	97.2	16.6	104	17.9	111	19.2	124	21.9	138	24.7
		18	70.2	11.9	83.7	14.4	97.2	16.9	104	18.2	111	19.6	124	22.4	138	25.2
		20	70.2	12.1	83.7	14.6	97.2	17.2	104	18.6	111	20.0	124	23.2	138	27.0
		21	70.2	12.3	83.7	14.8	97.2	17.4	104	18.8	111	20.4	124	24.0	138	27.9
		23	70.2	12.5	83.7	15.0	97.2	18.3	104	20.0	111	21.8	124	25.7	138	29.9
		25	70.2	12.9	83.7	16.0	97.2	19.5	104	21.4	111	23.3	124	27.5	138	32.1
		27	70.2	13.7	83.7	17.1	97.2	20.8	104	22.8	111	24.9	124	29.4	138	34.3
		29	70.2	14.6	83.7	18.2	97.2	22.2	104	24.3	111	26.6	124	31.4	138	36.7
		31	70.2	15.5	83.7	19.3	97.2	23.6	104	25.9	111	28.4	124	33.5	136	38.1
		33	70.2	16.4	83.7	20.5	97.2	25.1	104	27.6	111	30.2	124	35.8	134	39.5
		35	70.2	17.4	83.7	21.8	97.2	26.7	104	29.4	111	32.2	124	38.1	131	41.0
		37	70.2	18.5	83.7	23.2	97.2	28.4	104	31.3	111	34.3	124	40.6	129	42.4
		39	70.2	19.6	83.7	24.6	97.2	30.2	104	33.3	111	36.5	124	43.3	127	43.9
70	805 (91.00)	10	61.4	9.82	73.2	11.7	85.1	13.6	91.0	14.6	96.9	15.7	109	17.8	121	20.0
		12	61.4	9.97	73.2	11.8	85.1	13.8	91.0	14.9	96.9	15.9	109	18.1	121	20.4
		14	61.4	10.1	73.2	12.0	85.1	14.1	91.0	15.1	96.9	16.2	109	18.5	121	20.8
		16	61.4	10.3	73.2	12.3	85.1	14.3	91.0	15.4	96.9	16.5	109	18.8	121	21.2
		18	61.4	10.5	73.2	12.5	85.1	14.6	91.0	15.7	96.9	16.9	109	19.2	121	21.6
		20	61.4	10.6	73.2	12.7	85.1	14.9	91.0	16.0	96.9	17.2	109	19.6	121	22.2
		21	61.4	10.7	73.2	12.8	85.1	15.0	91.0	16.2	96.9	17.3	109	19.9	121	23.0
		23	61.4	10.9	73.2	13.0	85.1	15.3	91.0	16.7	96.9	18.2	109	21.3	121	24.6
		25	61.4	11.1	73.2	13.6	85.1	16.4	91.0	17.8	96.9	19.4	109	22.7	121	26.3
		27	61.4	11.7	73.2	14.4	85.1	17.4	91.0	19.0	96.9	20.7	109	24.3	121	28.2
		29	61.4	12.5	73.2	15.3	85.1	18.6	91.0	20.3	96.9	22.1	109	25.9	121	30.1
		31	61.4	13.2	73.2	16.3	85.1	19.7	91.0	21.6	96.9	23.5	109	27.6	121	32.1
		33	61.4	14.0	73.2	17.3	85.1	21.0	91.0	23.0	96.9	25.0	109	29.4	121	34.2
		35	61.4	14.8	73.2	18.4	85.1	22.3	91.0	24.4	96.9	26.6	109	31.3	121	36.4
		37	61.4	15.7	73.2	19.5	85.1	23.7	91.0	25.9	96.9	28.3	109	33.4	121	38.8
		39	61.4	16.6	73.2	20.6	85.1	25.1	91.0	27.6	96.9	30.1	109	35.5	121	41.4
60	690 (78.00)	10	52.6	8.54	62.8	10.0	72.9	11.6	78.0	12.4	83.1	13.3	93.2	15.0	103	16.8
		12	52.6	8.67	62.8	10.2	72.9	11.8	78.0	12.6	83.1	13.5	93.2	15.3	103	17.1
		14	52.6	8.79	62.8	10.3	72.9	12.0	78.0	12.9	83.1	13.7	93.2	15.6	103	17.4
		16	52.6	8.92	62.8	10.5	72.9	12.2	78.0	13.1	83.1	14.0	93.2	15.8	103	17.8
		18	52.6	9.06	62.8	10.7	72.9	12.4	78.0	13.3	83.1	14.2	93.2	16.1	103	18.1
		20	52.6	9.20	62.8	10.9	72.9	12.6	78.0	13.6	83.1	14.5	93.2	16.4	103	18.5
		21	52.6	9.28	62.8	11.0	72.9	12.8	78.0	13.7	83.1	14.6	93.2	16.6	103	18.7
		23	52.6	9.43	62.8	11.2	72.9	13.0	78.0	13.9	83.1	14.9	93.2	17.3	103	19.8
		25	52.6	9.59	62.8	11.4	72.9	13.5	78.0	14.7	83.1	15.9	93.2	18.4	103	21.2
		27	52.6	9.93	62.8	12.0	72.9	14.4	78.0	15.6	83.1	16.9	93.2	19.6	103	22.6
		29	52.6	10.5	62.8	12.8	72.9	15.3	78.0	16.6	83.1	18.0	93.2	20.9	103	24.1
		31	52.6	11.1	62.8	13.6	72.9	16.2	78.0	17.6	83.1	19.1	93.2	22.3	103	25.7
		33	52.6	11.8	62.8	14.4	72.9	17.2	78.0	18.7	83.1	20.3	93.2	23.7	103	27.4
		35	52.6	12.5	62.8	15.2	72.9	18.3	78.0	19.9	83.1	21.6	93.2	25.2	103	29.1
		37	52.6	13.2	62.8	16.1	72.9	19.4	78.0	21.1	83.1	22.9	93.2	26.8	103	31.0
		39	52.6	13.9	62.8	17.1	72.9	20.5	78.0	22.4	83.1	24.3	93.2	28.5	103	33.0
50	575 (65.00)	10	43.9	7.34	52.3	8.50	60.8	9.73	65.0	10.4	69.2	11.0	77.7	12.4	86.1	13.8
		12	43.9	7.44	52.3	8.62	60.8	9.87	65.0	10.5	69.2	11.2	77.7	12.6	86.1	14.0
		14	43.9	7.54	52.3	8.75	60.8	10.0	65.0	10.7	69.2	11.4	77.7	12.8	86.1	14.3
		16	43.9	7.64	52.3	8.88	60.8	10.2	65.0	10.9	69.2	11.6	77.7	13.0	86.1	14.5
		18	43.9	7.75	52.3	9.01	60.8	10.4	65.0	11.1	69.2	11.8	77.7	13.3	86.1	14.8
		20	43.9	7.86	52.3	9.15	60.8	10.5	65.0	11.2	69.2	12.0	77.7	13.5	86.1	15.1
		21	43.9	7.91	52.3	9.22	60.8	10.6	65.0	11.3	69.2	12.1	77.7	13.6	86.1	15.2
		23	43.9	8.03	52.3	9.37	60.8	10.8	65.0	11.5	69.2	12.3	77.7	13.9	86.1	15.6
		25	43.9	8.15	52.3	9.53	60.8	11.0	65.0	11.8	69.2	12.7	77.7	14.6	86.1	16.6
		27	43.9	8.29	52.3	9.87	60.8	11.6	65.0	12.5	69.2	13.5	77.7	15.5	86.1	17.7
		29	43.9	8.76	52.3	10.5	60.8	12.3	65.0	13.3	69.2	14.3	77.7	16.5	86.1	18.9
		31	43.9	9.26	52.3	11.1	60.8	13.1	65.0	14.1	69.2	15.2	77.7	17.5	86.1	20.1
		33	43.9	9.78	52.3	11.7	60.8	13.8	65.0	15.0	69.2	16.1	77.7	18.6	86.1	21.3
		35	43.9	10.3	52.3	12.4	60.8	14.7	65.0	15.9	69.2	17.1	77.7	19.8	86.1	22.7
		37	43.9	10.9	52.3	13.1	60.8	15.5	65.0	16.8	69.2	18.1	77.7	21.0	86.1	24.1
		39	43.9	11.5	52.3	13.8	60.8	16.4	65.0	17.8	69.2	19.2	77.7	22.3	86.1	25.6

4TW31482-1A

4 Capacity tables

4 - 2 Cooling capacity tables

REYQ48P8

TC: Total Capacity: kW ; PI: Power Input: kW (compressor + outdoor fan motor)

Combination (%)	Capacity index (kW)	Outdoor air temp. (°CDB)	Indoor air temperature: 14.0 °CWB / 20.0 °CDB		16.0 °CWB / 23.0 °CDB		18.0 °CWB / 26.0 °CDB		19.0 °CWB / 27.0 °CDB		20.0 °CWB / 28.0 °CDB		22.0 °CWB / 30.0 °CDB		24.0 °CWB / 32.0 °CDB	
			TC	PI	TC	PI	TC	PI	TC	PI	TC	PI	TC	PI	TC	PI
			kW	kW	kW	kW	kW	kW	kW	kW	kW	kW	kW	kW	kW	kW
130	1560	10	118	19.6	141	24.0	164	28.6	170	28.6	172	28.6	176	28.6	181	28.6
	(175.50)	12	118	20.0	141	24.5	164	29.1	168	29.1	170	29.1	174	29.1	179	29.1
		14	118	20.4	141	24.9	164	29.5	166	29.5	168	29.5	172	29.5	176	29.5
		16	118	20.7	141	25.4	161	29.3	163	29.4	166	29.4	170	29.5	174	29.5
		18	118	21.2	141	25.9	159	30.4	161	30.6	163	30.7	168	31.0	172	31.3
		20	118	21.6	141	27.6	157	31.9	159	32.1	161	32.2	165	32.6	170	32.9
		21	118	22.2	141	28.6	156	32.7	158	32.8	160	33.0	164	33.3	169	33.7
		23	118	23.7	141	30.7	154	34.2	156	34.3	158	34.5	162	34.9	166	35.2
		25	118	25.4	141	32.8	151	35.7	154	35.8	156	36.0	160	36.4	164	36.8
		27	118	27.1	141	35.1	149	37.2	151	37.4	153	37.6	158	37.9	162	38.3
		29	118	29.0	141	37.5	147	38.7	149	38.9	151	39.1	156	39.5	160	39.9
		31	118	30.9	141	39.7	145	40.2	147	40.4	149	40.6	153	41.1	158	41.5
		33	118	32.9	138	41.2	143	41.7	145	41.9	147	42.2	151	42.6	155	43.1
		35	118	35.1	136	42.7	140	43.2	143	43.5	145	43.7	149	44.2	153	44.7
		37	118	37.3	134	44.2	138	44.8	140	45.0	143	45.3	147	45.8	151	46.3
		39	118	39.7	132	45.8	136	46.3	138	46.6	140	46.8	145	47.4	149	47.9
120	1440	10	109	17.9	130	21.9	151	26.0	162	28.1	169	28.1	173	28.1	177	28.1
	(162.00)	12	109	18.3	130	22.3	151	26.5	162	28.7	167	28.7	171	28.7	175	28.7
		14	109	18.6	130	22.7	151	27.0	162	29.2	165	29.2	169	29.2	173	29.2
		16	109	18.9	130	23.2	151	27.6	161	29.4	163	29.4	167	29.5	171	29.5
		18	109	19.3	130	23.6	151	28.5	159	30.4	161	30.6	165	30.8	169	31.1
		20	109	19.7	130	24.6	151	30.6	157	31.9	158	32.0	162	32.3	166	32.6
		21	109	19.9	130	25.4	151	31.7	155	32.6	157	32.8	161	33.1	165	33.4
		23	109	21.2	130	27.3	151	34.0	153	34.1	155	34.3	159	34.6	163	34.9
		25	109	22.7	130	29.2	149	35.5	151	35.6	153	35.8	157	36.1	161	36.5
		27	109	24.2	130	31.2	147	36.9	149	37.1	151	37.3	155	37.7	159	38.0
		29	109	25.8	130	33.3	145	38.4	147	38.6	149	38.8	153	39.2	156	39.6
		31	109	27.5	130	35.6	142	39.9	144	40.1	146	40.3	150	40.7	154	41.2
		33	109	29.3	130	37.9	140	41.4	142	41.7	144	41.9	148	42.3	152	42.7
		35	109	31.2	130	40.4	138	43.0	140	43.2	142	43.4	146	43.9	150	44.3
		37	109	33.2	130	43.1	136	44.5	138	44.7	140	45.0	144	45.4	148	45.9
		39	109	35.4	130	45.5	134	46.0	136	46.3	138	46.5	142	47.0	146	47.5
110	1320	10	100	16.3	120	19.8	139	23.5	149	25.4	158	27.4	170	28.0	174	28.0
	(148.50)	12	100	16.6	120	20.2	139	24.0	149	25.9	158	27.9	168	28.5	172	28.5
		14	100	16.9	120	20.6	139	24.4	149	26.4	158	28.4	166	29.1	170	29.1
		16	100	17.2	120	21.0	139	24.9	149	26.9	158	29.0	164	29.5	167	29.5
		18	100	17.5	120	21.4	139	25.4	149	27.7	158	30.4	162	30.6	165	30.9
		20	100	17.9	120	21.8	139	26.9	149	29.7	156	31.8	159	32.1	163	32.4
		21	100	18.0	120	22.5	139	27.9	149	30.8	155	32.6	158	32.9	162	33.1
		23	100	18.9	120	24.1	139	29.9	149	33.1	153	34.1	156	34.4	160	34.7
		25	100	20.2	120	25.7	139	32.0	149	35.4	150	35.6	154	35.9	158	36.2
		27	100	21.5	120	27.5	139	34.2	146	36.9	148	37.1	152	37.4	155	37.7
		29	100	22.9	120	29.3	139	36.6	144	38.4	146	38.6	150	38.9	153	39.3
		31	100	24.4	120	31.3	139	39.1	142	39.9	144	40.1	147	40.4	151	40.8
		33	100	26.0	120	33.4	138	41.2	140	41.4	142	41.6	145	42.0	149	42.4
		35	100	27.6	120	35.5	136	42.7	138	42.9	139	43.1	143	43.5	147	43.9
		37	100	29.4	120	37.8	134	44.2	135	44.4	137	44.6	141	45.1	144	45.5
		39	100	31.2	120	40.3	131	45.7	133	45.9	135	46.2	139	46.6	142	47.1
100	1200	10	91.1	14.7	109	17.8	126	21.1	135	22.8	144	24.5	161	28.0	171	28.0
	(135.00)	12	91.1	14.9	109	18.1	126	21.5	135	23.2	144	25.0	161	28.5	168	28.5
		14	91.1	15.2	109	18.5	126	21.9	135	23.7	144	25.4	161	29.1	166	29.1
		16	91.1	15.5	109	18.8	126	22.3	135	24.1	144	25.9	161	29.5	164	29.5
		18	91.1	15.8	109	19.2	126	22.8	135	24.6	144	26.5	159	30.4	162	30.6
		20	91.1	16.1	109	19.6	126	23.4	135	25.8	144	28.3	156	31.9	160	32.1
		21	91.1	16.2	109	19.7	126	24.3	135	26.8	144	29.4	155	32.6	159	32.9
		23	91.1	16.7	109	21.1	126	26.0	135	28.7	144	31.5	153	34.1	156	34.4
		25	91.1	17.8	109	22.5	126	27.8	135	30.7	144	33.7	151	35.6	154	35.9
		27	91.1	18.9	109	24.0	126	29.7	135	32.8	144	36.1	149	37.1	152	37.4
		29	91.1	20.2	109	25.6	126	31.8	135	35.1	143	38.3	147	38.6	150	38.9
		31	91.1	21.5	109	27.3	126	33.9	135	37.4	141	39.8	144	40.1	148	40.5
		33	91.1	22.8	109	29.1	126	36.1	135	39.9	139	41.3	142	41.6	145	42.0
		35	91.1	24.2	109	31.0	126	38.5	135	42.6	137	42.8	140	43.2	143	43.5
		37	91.1	25.8	109	32.9	126	41.0	133	44.1	134	44.3	138	44.7	141	45.1
		39	91.1	27.4	109	35.0	126	43.7	131	45.6	132	45.8	136	46.2	139	46.7

4TW31482-1A

NOTES - ANMERKUNGEN - Σημειώσεις - NOTAS - REMARQUES - NOTE - OPMERKINGEN - примечания - NOTLAR

1 The above table shows the average value of conditions which may occur.
Die obige Tabelle zeigt den Durchschnittswert der Bedingungen, die auftreten können.
Στον παραπάνω πίνακα αναγράφεται η μέση τιμή για συνθήκες που μπορεί να προκύψουν.
La tabla de arriba muestra el valor medio de condiciones que pueden ocurrir.
Le tableau ci-dessus donne la valeur moyenne pour des conditions qui peuvent survenir.
La tabella in alto mostra il valore delle condizioni medie che si possono riscontrare.
De tabel hierboven geeft de gemiddelde waarde aan van situaties die kunnen voorvallen.
Таблица расположенная выше показывает среднее значение условий, которые могут наступить.
Yukarıdaki tablo meydana gelebilecek koşulların ortalama değerini göstermektedir.

4 Capacity tables

4 - 2 Cooling capacity tables

REYQ48P8

TC: Total Capacity: kW ; PI: Power Input: kW (compressor + outdoor fan motor)

Combination (%)	Capacity index (kW)	Outdoor air temp. (°CDB)	Indoor air temperature: 14.0 °CWB / 20.0 °CDB		16.0 °CWB / 23.0 °CDB		18.0 °CWB / 26.0 °CDB		19.0 °CWB / 27.0 °CDB		20.0 °CWB / 28.0 °CDB		22.0 °CWB / 30.0 °CDB		24.0 °CWB / 32.0 °CDB	
			TC	PI	TC	PI	TC	PI	TC	PI	TC	PI	TC	PI	TC	PI
			kW	kW	kW	kW	kW	kW	kW	kW	kW	kW	kW	kW	kW	kW
90	1080	10	82.0	13.1	97.8	15.8	114	18.7	122	20.2	129	21.7	145	24.8	161	27.9
	(121.50)	12	82.0	13.4	97.8	16.1	114	19.1	122	20.6	129	22.1	145	25.3	161	28.5
		14	82.0	13.6	97.8	16.4	114	19.4	122	21.0	129	22.5	145	25.7	161	29.0
		16	82.0	13.8	97.8	16.7	114	19.8	122	21.4	129	23.0	145	26.2	161	29.5
		18	82.0	14.1	97.8	17.0	114	20.2	122	21.8	129	23.4	145	26.8	159	30.4
		20	82.0	14.3	97.8	17.4	114	20.6	122	22.2	129	24.3	145	28.8	156	31.9
		21	82.0	14.5	97.8	17.5	114	20.9	122	23.0	129	25.2	145	29.8	155	32.6
		23	82.0	14.8	97.8	18.3	114	22.4	122	24.6	129	27.0	145	32.0	153	34.1
		25	82.0	15.5	97.8	19.5	114	23.9	122	26.3	129	28.8	145	34.2	151	35.6
		27	82.0	16.5	97.8	20.8	114	25.6	122	28.1	129	30.8	145	36.6	149	37.1
		29	82.0	17.6	97.8	22.2	114	27.3	122	30.0	129	32.9	143	38.3	146	38.6
		31	82.0	18.7	97.8	23.6	114	29.1	122	32.0	129	35.1	141	39.8	144	40.1
		33	82.0	19.9	97.8	25.1	114	31.0	122	34.2	129	37.5	139	41.3	142	41.6
		35	82.0	21.1	97.8	26.7	114	33.0	122	36.4	129	40.0	137	42.8	140	43.2
		37	82.0	22.4	97.8	28.4	114	35.1	122	38.8	129	42.6	135	44.3	138	44.7
		39	82.0	23.8	97.8	30.2	114	37.4	122	41.3	129	45.4	133	45.9	135	46.2
80	960	10	72.9	11.7	86.9	14.0	101	16.4	108	17.7	115	19.0	129	21.6	143	24.4
	(108.00)	12	72.9	11.9	86.9	14.2	101	16.7	108	18.0	115	19.3	129	22.0	143	24.8
		14	72.9	12.0	86.9	14.5	101	17.0	108	18.3	115	19.7	129	22.5	143	25.3
		16	72.9	12.3	86.9	14.7	101	17.3	108	18.7	115	20.1	129	22.9	143	25.8
		18	72.9	12.5	86.9	15.0	101	17.7	108	19.0	115	20.5	129	23.4	143	26.3
		20	72.9	12.7	86.9	15.3	101	18.0	108	19.4	115	20.9	129	24.2	143	28.2
		21	72.9	12.8	86.9	15.4	101	18.2	108	19.6	115	21.3	129	25.1	143	29.2
		23	72.9	13.0	86.9	15.7	101	19.1	108	20.9	115	22.8	129	26.9	143	31.3
		25	72.9	13.5	86.9	16.7	101	20.4	108	22.3	115	24.4	129	28.7	143	33.5
		27	72.9	14.3	86.9	17.8	101	21.7	108	23.8	115	26.0	129	30.7	143	35.8
		29	72.9	15.2	86.9	19.0	101	23.1	108	25.4	115	27.8	129	32.8	143	38.3
		31	72.9	16.2	86.9	20.2	101	24.7	108	27.1	115	29.6	129	35.0	141	39.8
		33	72.9	17.1	86.9	21.4	101	26.2	108	28.8	115	31.5	129	37.3	139	41.3
		35	72.9	18.2	86.9	22.8	101	27.9	108	30.7	115	33.6	129	39.8	137	42.8
		37	72.9	19.3	86.9	24.2	101	29.7	108	32.7	115	35.8	129	42.4	134	44.3
		39	72.9	20.4	86.9	25.7	101	31.6	108	34.7	115	38.1	129	45.2	132	45.8
70	840	10	63.8	10.3	76.1	12.2	88.4	14.2	94.5	15.3	101	16.4	113	18.6	125	20.9
	(94.50)	12	63.8	10.4	76.1	12.4	88.4	14.5	94.5	15.5	101	16.6	113	18.9	125	21.3
		14	63.8	10.6	76.1	12.6	88.4	14.7	94.5	15.8	101	16.9	113	19.3	125	21.7
		16	63.8	10.7	76.1	12.8	88.4	15.0	94.5	16.1	101	17.3	113	19.7	125	22.1
		18	63.8	10.9	76.1	13.0	88.4	15.3	94.5	16.4	101	17.6	113	20.0	125	22.6
		20	63.8	11.1	76.1	13.3	88.4	15.5	94.5	16.7	101	17.9	113	20.4	125	23.2
		21	63.8	11.2	76.1	13.4	88.4	15.7	94.5	16.9	101	18.1	113	20.8	125	24.0
		23	63.8	11.4	76.1	13.6	88.4	16.0	94.5	17.5	101	19.0	113	22.2	125	25.7
		25	63.8	11.6	76.1	14.2	88.4	17.1	94.5	18.6	101	20.3	113	23.7	125	27.5
		27	63.8	12.3	76.1	15.1	88.4	18.2	94.5	19.9	101	21.6	113	25.4	125	29.4
		29	63.8	13.0	76.1	16.0	88.4	19.4	94.5	21.2	101	23.0	113	27.0	125	31.4
		31	63.8	13.8	76.1	17.0	88.4	20.6	94.5	22.5	101	24.5	113	28.8	125	33.5
		33	63.8	14.6	76.1	18.1	88.4	21.9	94.5	24.0	101	26.1	113	30.7	125	35.7
		35	63.8	15.5	76.1	19.2	88.4	23.3	94.5	25.5	101	27.8	113	32.7	125	38.1
		37	63.8	16.4	76.1	20.3	88.4	24.7	94.5	27.1	101	29.5	113	34.8	125	40.5
		39	63.8	17.3	76.1	21.6	88.4	26.2	94.5	28.8	101	31.4	113	37.1	125	43.2
60	720	10	54.7	8.92	65.2	10.5	75.7	12.1	81.0	13.0	86.3	13.9	96.8	15.7	107	17.6
	(81.00)	12	54.7	9.05	65.2	10.6	75.7	12.3	81.0	13.2	86.3	14.1	96.8	15.9	107	17.9
		14	54.7	9.18	65.2	10.8	75.7	12.5	81.0	13.4	86.3	14.3	96.8	16.2	107	18.2
		16	54.7	9.32	65.2	11.0	75.7	12.7	81.0	13.7	86.3	14.6	96.8	16.5	107	18.6
		18	54.7	9.46	65.2	11.2	75.7	13.0	81.0	13.9	86.3	14.9	96.8	16.9	107	18.9
		20	54.7	9.61	65.2	11.3	75.7	13.2	81.0	14.2	86.3	15.1	96.8	17.2	107	19.3
		21	54.7	9.68	65.2	11.4	75.7	13.3	81.0	14.3	86.3	15.3	96.8	17.3	107	19.5
		23	54.7	9.84	65.2	11.6	75.7	13.6	81.0	14.6	86.3	15.6	96.8	18.0	107	20.7
		25	54.7	10.0	65.2	11.9	75.7	14.1	81.0	15.3	86.3	16.6	96.8	19.2	107	22.1
		27	54.7	10.4	65.2	12.6	75.7	15.0	81.0	16.3	86.3	17.6	96.8	20.5	107	23.6
		29	54.7	11.0	65.2	13.3	75.7	15.9	81.0	17.3	86.3	18.8	96.8	21.9	107	25.2
		31	54.7	11.6	65.2	14.2	75.7	16.9	81.0	18.4	86.3	20.0	96.8	23.3	107	26.8
		33	54.7	12.3	65.2	15.0	75.7	18.0	81.0	19.6	86.3	21.2	96.8	24.8	107	28.6
		35	54.7	13.0	65.2	15.9	75.7	19.1	81.0	20.8	86.3	22.5	96.8	26.3	107	30.4
		37	54.7	13.8	65.2	16.8	75.7	20.2	81.0	22.0	86.3	23.9	96.8	28.0	107	32.4
		39	54.7	14.5	65.2	17.8	75.7	21.4	81.0	23.4	86.3	25.4	96.8	29.7	107	34.4
50	600	10	45.6	7.67	54.3	8.87	63.1	10.2	67.5	10.8	71.9	11.5	80.7	12.9	89.4	14.4
	(67.50)	12	45.6	7.77	54.3	9.00	63.1	10.3	67.5	11.0	71.9	11.7	80.7	13.1	89.4	14.6
		14	45.6	7.87	54.3	9.13	63.1	10.5	67.5	11.2	71.9	11.9	80.7	13.4	89.4	14.9
		16	45.6	7.98	54.3	9.27	63.1	10.6	67.5	11.4	71.9	12.1	80.7	13.6	89.4	15.2
		18	45.6	8.09	54.3	9.41	63.1	10.8	67.5	11.5	71.9	12.3	80.7	13.8	89.4	15.5
		20	45.6	8.20	54.3	9.56	63.1	11.0	67.5	11.7	71.9	12.5	80.7	14.1	89.4	15.7
		21	45.6	8.26	54.3	9.63	63.1	11.1	67.5	11.8	71.9	12.6	80.7	14.2	89.4	15.9
		23	45.6	8.39	54.3	9.79	63.1	11.3	67.5	12.1	71.9	12.9	80.7	14.5	89.4	16.3
		25	45.6	8.51	54.3	9.95	63.1	11.5	67.5	12.3	71.9	13.2	80.7	15.2	89.4	17.3
		27	45.6	8.65	54.3	10.3	63.1	12.1	67.5	13.1	71.9	14.1	80.7	16.2	89.4	18.5
		29	45.6	9.15	54.3	10.9	63.1	12.9	67.5	13.9	71.9	15.0	80.7	17.2	89.4	19.7
		31	45.6	9.67	54.3	11.6	63.1	13.6	67.5	14.7	71.9	15.9	80.7	18.3	89.4	20.9
		33	45.6	10.2	54.3	12.2	63.1	14.4	67.5	15.6	71.9	16.9	80.7	19.5	89.4	22.3
		35	45.6	10.8	54.3	12.9	63.1	15.3	67.5	16.6	71.9	17.9	80.7	20.7	89.4	23.7
		37	45.6	11.4	54.3	13.7	63.1	16.2	67.5	17.5	71.9	18.9	80.7	21.9	89.4	25.1
		39	45.6	12.0	54.3	14.4	63.1	17.1	67.5	18.6	71.9	20.1	80.7	23.3	89.4	26.7

4TW31482-1A

4 Capacity tables

4 - 3 Heating capacity tables

REYQ8P9

TC: Total Capacity: kW ; PI: Power Input: kW (compressor + outdoor fan motor)

Combination (%)	Capacity index (kW)	Outdoor air temp.		Indoor air temperature: °CDB											
				16.0		18.0		20.0		21.0		22.0		24.0	
				TC	PI	TC	PI	TC	PI	TC	PI	TC	PI	TC	PI
		°CDB	°CWB	kW	kW	kW	kW	kW	kW	kW	kW	kW	kW	kW	kW
130	260 (29.12)	-19.8	-20.0	16.6	4.14	16.6	4.42	16.5	4.69	16.5	4.83	16.5	4.96	16.4	5.24
		-18.8	-19.0	17.1	4.29	17.1	4.56	17.0	4.82	17.0	4.96	17.0	5.09	16.9	5.35
		-16.7	-17.0	18.1	4.56	18.1	4.81	18.0	5.07	18.0	5.19	18.0	5.32	17.9	5.57
		-13.7	-15.0	19.1	4.81	19.1	5.05	19.0	5.28	19.0	5.40	18.9	5.52	18.9	5.76
		-11.8	-13.0	20.1	5.03	20.0	5.25	20.0	5.48	20.0	5.59	19.9	5.70	19.9	5.93
		-9.8	-11.0	21.1	5.23	21.0	5.44	21.0	5.66	20.9	5.76	20.9	5.87	20.9	6.08
		-9.5	-10.0	21.6	5.32	21.5	5.53	21.5	5.74	21.4	5.84	21.4	5.95	21.3	6.16
		-8.5	-9.1	22.0	5.40	22.0	5.60	21.9	5.81	21.9	5.91	21.8	6.01	21.8	6.22
		-7.0	-7.6	22.8	5.52	22.7	5.72	22.6	5.92	22.6	6.02	22.6	6.12	22.5	6.32
		-5.0	-5.6	23.7	5.68	23.7	5.87	23.6	6.06	23.6	6.15	23.6	6.25	23.5	6.44
		-3.0	-3.7	24.7	5.82	24.6	6.00	24.6	6.18	24.5	6.27	24.5	6.36	24.5	6.55
		0.0	-0.7	26.2	6.01	26.1	6.18	26.1	6.36	26.0	6.44	26.0	6.53	25.9	6.70
		3.0	2.2	27.6	6.18	27.5	6.34	27.5	6.51	27.5	6.59	27.4	6.67	27.4	6.83
		5.0	4.1	28.5	6.28	28.5	6.44	28.4	6.60	28.4	6.68	28.4	6.76	28.3	6.91
		7.0	6.0	29.5	6.38	29.4	6.53	29.4	6.68	29.3	6.76	29.3	6.84	28.3	6.64
		9.0	7.9	30.4	6.47	30.4	6.62	30.3	6.76	30.3	6.84	30.2	6.91	28.3	6.39
		11.0	9.8	31.3	6.55	31.3	6.70	31.2	6.84	31.2	6.91	30.4	6.71	28.3	6.15
		13.0	11.8	32.3	6.64	32.3	6.78	32.2	6.92	31.5	6.73	30.4	6.46	28.3	5.93
		15.0	13.7	33.3	6.71	33.2	6.85	32.5	6.76	31.5	6.50	30.4	6.24	28.3	5.72
120	240 (26.88)	-19.8	-20.0	16.6	4.51	16.5	4.77	16.5	5.02	16.4	5.15	16.4	5.27	16.4	5.53
		-18.8	-19.0	17.1	4.65	17.0	4.90	17.0	5.14	16.9	5.26	16.9	5.39	16.8	5.63
		-16.7	-17.0	18.0	4.90	18.0	5.13	17.9	5.37	17.9	5.48	17.9	5.60	17.8	5.83
		-13.7	-15.0	19.0	5.13	19.0	5.35	18.9	5.57	18.9	5.68	18.9	5.79	18.8	6.01
		-11.8	-13.0	20.0	5.33	20.0	5.54	19.9	5.75	19.9	5.85	19.9	5.96	19.8	6.16
		-9.8	-11.0	21.0	5.52	21.0	5.71	20.9	5.91	20.9	6.01	20.8	6.11	20.8	6.31
		-9.5	-10.0	21.5	5.60	21.4	5.79	21.4	5.99	21.4	6.08	21.3	6.18	21.3	6.37
		-8.5	-9.1	21.9	5.68	21.9	5.86	21.8	6.05	21.8	6.15	21.8	6.24	21.7	6.43
		-7.0	-7.6	22.7	5.79	22.6	5.97	22.6	6.16	22.6	6.25	22.5	6.34	22.5	6.52
		-5.0	-5.6	23.7	5.94	23.6	6.11	23.6	6.29	23.5	6.37	23.5	6.46	23.5	6.64
		-3.0	-3.7	24.6	6.06	24.6	6.23	24.5	6.40	24.5	6.48	24.5	6.57	24.4	6.74
		0.0	-0.7	26.1	6.24	26.0	6.40	26.0	6.56	26.0	6.64	25.9	6.72	25.9	6.88
		3.0	2.2	27.5	6.40	27.5	6.55	27.4	6.70	27.4	6.78	27.4	6.85	26.1	6.54
		5.0	4.1	28.5	6.50	28.4	6.64	28.4	6.79	28.3	6.86	28.1	6.84	26.1	6.27
		7.0	6.0	29.4	6.58	29.3	6.73	29.3	6.87	29.0	6.85	28.1	6.57	26.1	6.03
		9.0	7.9	30.3	6.67	30.3	6.80	30.0	6.86	29.0	6.59	28.1	6.32	26.1	5.80
		11.0	9.8	31.3	6.75	31.2	6.88	30.0	6.60	29.0	6.34	28.1	6.09	26.1	5.59
		13.0	11.8	32.3	6.83	31.9	6.86	30.0	6.35	29.0	6.11	28.1	5.86	26.1	5.39
		15.0	13.7	33.2	6.90	31.9	6.62	30.0	6.13	29.0	5.90	28.1	5.66	26.1	5.21
110	220 (24.64)	-19.8	-20.0	16.5	4.88	16.4	5.11	16.4	5.35	16.4	5.46	16.3	5.58	16.3	5.81
		-18.8	-19.0	17.0	5.01	16.9	5.23	16.9	5.46	16.9	5.57	16.8	5.69	16.8	5.91
		-16.7	-17.0	18.0	5.24	17.9	5.45	17.9	5.67	17.8	5.77	17.8	5.88	17.8	6.09
		-13.7	-15.0	19.0	5.45	18.9	5.65	18.9	5.85	18.8	5.95	18.8	6.05	18.8	6.25
		-11.8	-13.0	19.9	5.64	19.9	5.83	19.8	6.02	19.8	6.11	19.8	6.21	19.7	6.40
		-9.8	-11.0	20.9	5.81	20.9	5.99	20.8	6.17	20.8	6.26	20.8	6.35	20.7	6.53
		-9.5	-10.0	21.4	5.88	21.4	6.06	21.3	6.24	21.3	6.33	21.3	6.42	21.2	6.59
		-8.5	-9.1	21.9	5.95	21.8	6.13	21.8	6.30	21.7	6.39	21.7	6.47	21.7	6.65
		-7.0	-7.6	22.6	6.06	22.6	6.23	22.5	6.40	22.5	6.48	22.5	6.56	22.4	6.73
		-5.0	-5.6	23.6	6.19	23.5	6.35	23.5	6.51	23.5	6.59	23.4	6.67	23.4	6.83
		-3.0	-3.7	24.5	6.31	24.5	6.46	24.4	6.62	24.4	6.69	24.4	6.77	24.0	6.76
		0.0	-0.7	26.0	6.48	26.0	6.62	25.9	6.77	25.9	6.84	25.7	6.86	24.0	6.28
		3.0	2.2	27.4	6.62	27.4	6.76	27.3	6.90	26.6	6.68	25.7	6.41	24.0	5.88
		5.0	4.1	28.4	6.71	28.3	6.84	27.5	6.67	26.6	6.41	25.7	6.15	24.0	5.65
		7.0	6.0	29.3	6.79	29.3	6.92	27.5	6.41	26.6	6.16	25.7	5.91	24.0	5.43
		9.0	7.9	30.3	6.87	29.3	6.65	27.5	6.16	26.6	5.93	25.7	5.69	24.0	5.23
		11.0	9.8	31.0	6.88	29.3	6.40	27.5	5.94	26.6	5.71	25.7	5.49	24.0	5.05
		13.0	11.8	31.0	6.62	29.3	6.16	27.5	5.72	26.6	5.50	25.7	5.29	24.0	4.87
		15.0	13.7	31.0	6.39	29.3	5.95	27.5	5.53	26.6	5.32	25.7	5.11	24.0	4.71
100	200 (22.40)	-19.8	-20.0	16.4	5.25	16.4	5.46	16.3	5.68	16.3	5.78	16.3	5.89	16.2	6.10
		-18.8	-19.0	16.9	5.37	16.9	5.57	16.8	5.78	16.8	5.88	16.8	5.98	16.7	6.19
		-16.7	-17.0	17.9	5.58	17.8	5.77	17.8	5.97	17.8	6.06	17.8	6.16	17.7	6.35
		-13.7	-15.0	18.9	5.77	18.8	5.95	18.8	6.14	18.8	6.23	18.7	6.32	18.7	6.50
		-11.8	-13.0	19.9	5.94	19.8	6.11	19.8	6.29	19.8	6.37	19.7	6.46	19.7	6.63
		-9.8	-11.0	20.9	6.10	20.8	6.26	20.8	6.43	20.7	6.51	20.7	6.59	20.7	6.76
		-9.5	-10.0	21.3	6.17	21.3	6.33	21.3	6.49	21.2	6.57	21.2	6.65	21.2	6.81
		-8.5	-9.1	21.8	6.23	21.7	6.39	21.7	6.55	21.7	6.62	21.7	6.70	21.6	6.86
		-7.0	-7.6	22.5	6.33	22.5	6.48	22.4	6.63	22.4	6.71	22.4	6.78	21.8	6.66
		-5.0	-5.6	23.5	6.45	23.5	6.59	23.4	6.74	23.4	6.81	23.4	6.89	21.8	6.31
		-3.0	-3.7	24.5	6.56	24.4	6.70	24.4	6.84	24.2	6.84	23.4	6.56	21.8	6.02
		0.0	-0.7	25.9	6.71	25.9	6.84	25.0	6.62	24.2	6.36	23.4	6.10	21.8	5.60
		3.0	2.2	27.4	6.84	26.6	6.68	25.0	6.19	24.2	5.95	23.4	5.71	21.8	5.25
		5.0	4.1	28.2	6.89	26.6	6.41	25.0	5.94	24.2	5.71	23.4	5.49	21.8	5.05
		7.0	6.0	28.2	6.61	26.6	6.15	25.0	5.71	24.2	5.49	23.4	5.28	21.8	4.86
		9.0	7.9	28.2	6.36	26.6	5.92	25.0	5.50	24.2	5.29	23.4	5.08	21.8	4.68
		11.0	9.8	28.2	6.12	26.6	5.71	25.0	5.30	24.2	5.10	23.4	4.91	21.8	4.52
		13.0	11.8	28.2	5.90	26.6	5.50	25.0	5.11	24.2	4.92	23.4	4.73	21.8	4.36
		15.0	13.7	28.2	5.70	26.6	5.31	25.0	4.94	24.2	4.76	23.4	4.58	21.8	4.23

4TW31482-2A

NOTES - ANMERKUNGEN - Σημειώσεις - NOTAS - REMARQUES - NOTE - OPMERKINGEN - примечания - NOTLAR

1 is shown as reference. When selecting the unit models, avoid the Outdoor air temperature range shown by .

dient als Verweis. Vermeiden Sie bei der Auswahl der Gerätemodelle den als markierten Temperaturbereich der Außenluft

Η είναι ενδεικτική. κατά την επιλογή των μοντέλων των μονάδων, αποφύγετε το εύρος θερμοκρασίας εξωτερικού αέρα που υποδεικνύεται

se muestra como referencia. Cuando seleccione los modelos de unidad, evite el intervalo de temperaturas del aire exterior indicado mediante

est montré comme référence.Lors du choix des modèles d'unités, évitez la plage de températures de l'air extérieur illustré par

valori riportati unicamente come riferimento. Nel selezionare i modelli delle unità, non considerare i valori di temperatura dell'aria esterna indicati con il colore

is als referentie getoond. Wanneer modellen van eenheden worden gekozen, vermijd dan het bereik van buitenluchttemperaturen geïllustreerd door

показан как. При выборе модели устройства избегайте внешнюю температуру воздуха, указанную в

referans olarak gösterilmektedir. Ünite modellerini seçerken, belirtilen Dış hava sıcaklığı aralığından kaçının

2 The above table shows the average value of conditions which may occur.

Die obige Tabelle zeigt den Durchschnittswert der Bedingungen, die auftreten können.

Στον παραπάνω πίνακα αναγράφεται η μέση τιμή για συνθήκες που μπορεί να προκύψουν.

La tabla de arriba muestra el valor medio de condiciones que pueden ocurrir.

Le tableau ci-dessus donne la valeur moyenne pour des conditions qui peuvent survenir.

La tabella in alto mostra il valore delle condizioni medie che si possono riscontrare.

De tabel hierboven geeft de gemiddelde waarde aan van situaties die kunnen voorvallen.

Таблица расположенная выше показывает среднее значение условий, которые могут наступить.

Yukarıdaki tablo meydana gelebilecek koşulların ortalama değerini göstermektedir.

4 Capacity tables

4 - 3 Heating capacity tables

REYQ8P9

TC: Total Capacity: kW ; PI: Power Input: kW (compressor + outdoor fan motor)

Combination (%)	Capacity index (kW)	Outdoor air temp.		Indoor air temperature: °CDB											
				16.0		18.0		20.0		21.0		22.0		24.0	
				TC	PI	TC	PI	TC	PI	TC	PI	TC	PI	TC	PI
		°CDB	°CWB	kW	kW	kW	kW	kW	kW	kW	kW	kW	kW	kW	kW
90%	180	-19.8	-20.0	16.3	5.62	16.3	5.81	16.3	6.00	16.2	6.10	16.2	6.19	16.2	6.38
	(20.16)	-18.8	-19.0	16.8	5.73	16.8	5.91	16.7	6.10	16.7	6.19	16.7	6.28	16.7	6.47
		-16.7	-17.0	17.8	5.92	17.8	6.09	17.7	6.27	17.7	6.35	17.7	6.44	17.7	6.62
		-13.7	-15.0	18.8	6.09	18.8	6.26	18.7	6.42	18.7	6.50	18.7	6.58	18.6	6.75
		-11.8	-13.0	19.8	6.25	19.7	6.40	19.7	6.56	19.7	6.64	19.7	6.71	19.6	6.86
		-9.8	-11.0	20.8	6.39	20.7	6.53	20.7	6.68	20.7	6.76	20.7	6.83	19.6	6.45
		-9.5	-10.0	21.3	6.45	21.2	6.60	21.2	6.74	21.2	6.81	21.1	6.84	19.6	6.26
		-8.5	-9.1	21.7	6.51	21.7	6.65	21.6	6.79	21.6	6.86	21.1	6.66	19.6	6.11
		-7.0	-7.6	22.5	6.60	22.4	6.73	22.4	6.87	21.8	6.66	21.1	6.39	19.6	5.86
		-5.0	-5.6	23.4	6.71	23.4	6.84	22.5	6.57	21.8	6.31	21.1	6.06	19.6	5.56
		-3.0	-3.7	24.4	6.80	23.9	6.75	22.5	6.26	21.8	6.01	21.1	5.77	19.6	5.30
		0.0	-0.7	25.4	6.74	23.9	6.28	22.5	5.82	21.8	5.60	21.1	5.38	19.6	4.95
		3.0	2.2	25.4	6.31	23.9	5.88	22.5	5.45	21.8	5.25	21.1	5.05	19.6	4.65
		5.0	4.1	25.4	6.05	23.9	5.64	22.5	5.24	21.8	5.04	21.1	4.85	19.6	4.47
		7.0	6.0	25.4	5.82	23.9	5.42	22.5	5.04	21.8	4.86	21.1	4.67	19.6	4.31
		9.0	7.9	25.4	5.60	23.9	5.23	22.5	4.86	21.8	4.68	21.1	4.50	19.6	4.16
		11.0	9.8	25.4	5.40	23.9	5.04	22.5	4.69	21.8	4.52	21.1	4.35	19.6	4.02
		13.0	11.8	25.4	5.20	23.9	4.86	22.5	4.53	21.8	4.36	21.1	4.20	19.6	3.88
		15.0	13.7	25.4	5.03	23.9	4.70	22.5	4.38	21.8	4.22	21.1	4.07	19.6	3.76
80%	160	-19.8	-20.0	16.3	6.00	16.2	6.16	16.2	6.33	16.2	6.42	16.1	6.50	16.1	6.67
	(17.92)	-18.8	-19.0	16.7	6.09	16.7	6.25	16.7	6.42	16.7	6.50	16.6	6.58	16.6	6.74
		-16.7	-17.0	17.7	6.26	17.7	6.41	17.7	6.57	17.6	6.65	17.6	6.72	17.4	6.78
		-13.7	-15.0	18.7	6.41	18.7	6.56	18.7	6.70	18.6	6.78	18.6	6.85	17.4	6.33
		-11.8	-13.0	19.7	6.55	19.7	6.69	19.6	6.83	19.4	6.75	18.7	6.48	17.4	5.94
		-9.8	-11.0	20.7	6.68	20.7	6.81	20.0	6.61	19.4	6.35	18.7	6.09	17.4	5.59
		-9.5	-10.0	21.2	6.73	21.2	6.86	20.0	6.42	19.4	6.17	18.7	5.92	17.4	5.44
		-8.5	-9.1	21.6	6.78	21.3	6.75	20.0	6.25	19.4	6.01	18.7	5.77	17.4	5.30
		-7.0	-7.6	22.4	6.86	21.3	6.47	20.0	6.00	19.4	5.77	18.7	5.54	17.4	5.10
		-5.0	-5.6	22.6	6.59	21.3	6.14	20.0	5.69	19.4	5.48	18.7	5.26	17.4	4.84
		-3.0	-3.7	22.6	6.28	21.3	5.85	20.0	5.43	19.4	5.23	18.7	5.02	17.4	4.63
		0.0	-0.7	22.6	5.84	21.3	5.45	20.0	5.06	19.4	4.87	18.7	4.69	17.4	4.32
		3.0	2.2	22.6	5.47	21.3	5.11	20.0	4.75	19.4	4.58	18.7	4.41	17.4	4.07
		5.0	4.1	22.6	5.26	21.3	4.91	20.0	4.57	19.4	4.41	18.7	4.24	17.4	3.92
		7.0	6.0	22.6	5.06	21.3	4.73	20.0	4.41	19.4	4.25	18.7	4.09	17.4	3.78
		9.0	7.9	22.6	4.88	21.3	4.56	20.0	4.25	19.4	4.10	18.7	3.95	17.4	3.65
		11.0	9.8	22.6	4.71	21.3	4.40	20.0	4.11	19.4	3.96	18.7	3.82	17.4	3.54
		13.0	11.8	22.6	4.54	21.3	4.25	20.0	3.97	19.4	3.83	18.7	3.69	17.4	3.42
		15.0	13.7	22.6	4.40	21.3	4.12	20.0	3.84	19.4	3.71	18.7	3.58	17.4	3.32
70%	140	-19.8	-20.0	16.2	6.37	16.1	6.51	16.1	6.66	16.1	6.74	16.1	6.81	15.3	6.42
	(15.68)	-18.8	-19.0	16.7	6.45	16.6	6.59	16.6	6.73	16.6	6.81	16.4	6.75	15.3	6.18
		-16.7	-17.0	17.7	6.60	17.6	6.73	17.5	6.81	16.9	6.54	16.4	6.28	15.3	5.76
		-13.7	-15.0	18.6	6.73	18.6	6.86	17.5	6.36	16.9	6.11	16.4	5.87	15.3	5.39
		-11.8	-13.0	19.6	6.85	18.6	6.44	17.5	5.97	16.9	5.74	16.4	5.51	15.3	5.07
		-9.8	-11.0	19.8	6.51	18.6	6.06	17.5	5.62	16.9	5.41	16.4	5.20	15.3	4.78
		-9.5	-10.0	19.8	6.32	18.6	5.89	17.5	5.46	16.9	5.26	16.4	5.05	15.3	4.65
		-8.5	-9.1	19.8	6.16	18.6	5.74	17.5	5.33	16.9	5.13	16.4	4.93	15.3	4.54
		-7.0	-7.6	19.8	5.91	18.6	5.51	17.5	5.12	16.9	4.93	16.4	4.74	15.3	4.37
		-5.0	-5.6	19.8	5.61	18.6	5.23	17.5	4.87	16.9	4.69	16.4	4.51	15.3	4.16
		-3.0	-3.7	19.8	5.35	18.6	4.99	17.5	4.65	16.9	4.48	16.4	4.31	15.3	3.98
		0.0	-0.7	19.8	4.99	18.6	4.66	17.5	4.34	16.9	4.19	16.4	4.03	15.3	3.73
		3.0	2.2	19.8	4.69	18.6	4.38	17.5	4.09	16.9	3.94	16.4	3.80	15.3	3.52
		5.0	4.1	19.8	4.51	18.6	4.22	17.5	3.94	16.9	3.80	16.4	3.66	15.3	3.39
		7.0	6.0	19.8	4.34	18.6	4.07	17.5	3.80	16.9	3.67	16.4	3.54	15.3	3.28
		9.0	7.9	19.8	4.19	18.6	3.93	17.5	3.67	16.9	3.54	16.4	3.42	15.3	3.17
		11.0	9.8	19.8	4.05	18.6	3.80	17.5	3.55	16.9	3.43	16.4	3.31	15.3	3.07
		13.0	11.8	19.8	3.91	18.6	3.67	17.5	3.43	16.9	3.32	16.4	3.20	15.3	2.98
		15.0	13.7	19.8	3.79	18.6	3.56	17.5	3.33	16.9	3.22	16.4	3.11	15.3	2.89
60%	120	-19.8	-20.0	16.1	6.74	16.0	6.79	15.0	6.29	14.5	6.04	14.0	5.80	13.1	5.33
	(13.44)	-18.8	-19.0	16.6	6.81	16.0	6.54	15.0	6.06	14.5	5.82	14.0	5.59	13.1	5.14
		-16.7	-17.0	16.9	6.54	16.0	6.08	15.0	5.64	14.5	5.43	14.0	5.22	13.1	4.80
		-13.7	-15.0	16.9	6.11	16.0	5.69	15.0	5.29	14.5	5.09	14.0	4.89	13.1	4.51
		-11.8	-13.0	16.9	5.73	16.0	5.35	15.0	4.97	14.5	4.79	14.0	4.60	13.1	4.25
		-9.8	-11.0	16.9	5.40	16.0	5.04	15.0	4.69	14.5	4.52	14.0	4.35	13.1	4.02
		-9.5	-10.0	16.9	5.25	16.0	4.91	15.0	4.57	14.5	4.40	14.0	4.24	13.1	3.91
		-8.5	-9.1	16.9	5.12	16.0	4.79	15.0	4.46	14.5	4.30	14.0	4.14	13.1	3.83
		-7.0	-7.6	16.9	4.93	16.0	4.60	15.0	4.29	14.5	4.14	14.0	3.98	13.1	3.69
		-5.0	-5.6	16.9	4.68	16.0	4.38	15.0	4.09	14.5	3.94	14.0	3.80	13.1	3.52
		-3.0	-3.7	16.9	4.48	16.0	4.19	15.0	3.91	14.5	3.77	14.0	3.64	13.1	3.37
		0.0	-0.7	16.9	4.19	16.0	3.92	15.0	3.66	14.5	3.54	14.0	3.41	13.1	3.17
		3.0	2.2	16.9	3.94	16.0	3.70	15.0	3.46	14.5	3.34	14.0	3.22	13.1	2.99
		5.0	4.1	16.9	3.80	16.0	3.56	15.0	3.33	14.5	3.22	14.0	3.11	13.1	2.89
		7.0	6.0	16.9	3.66	16.0	3.44	15.0	3.22	14.5	3.11	14.0	3.01	13.1	2.80
		9.0	7.9	16.9	3.54	16.0	3.33	15.0	3.12	14.5	3.01	14.0	2.91	13.1	2.71
		11.0	9.8	16.9	3.43	16.0	3.22	15.0	3.02	14.5	2.92	14.0	2.82	13.1	2.63
		13.0	11.8	16.9	3.32	16.0	3.12	15.0	2.93	14.5	2.83	14.0	2.74	13.1	2.55
		15.0	13.7	16.9	3.22	16.0	3.03	15.0	2.84	14.5	2.75	14.0	2.66	13.1	2.48
50%	100	-19.8	-20.0	14.1	5.84	13.3	5.44	12.5	5.06	12.1	4.87	11.7	4.68	10.9	4.32
	(11.20)	-18.8	-19.0	14.1	5.63	13.3	5.25	12.5	4.88	12.1	4.70	11.7	4.52	10.9	4.17
		-16.7	-17.0	14.1	5.25	13.3	4.90	12.5	4.56	12.1	4.40	11.7	4.23	10.9	3.91
		-13.7	-15.0	14.1	4.92	13.3	4.60	12.5	4.28	12.1	4.13	11.7	3.98	10.9	3.68
		-11.8	-13.0	14.1	4.63	13.3	4.33	12.5	4.04	12.1	3.90	11.7	3.76	10.9	3.48
		-9.8	-11.0	14.1	4.38	13.3	4.10	12.5	3.83	12.1	3.69	11.7	3.56	10.9	3.30
		-9.5	-10.0	14.1	4.26	13.3	3.99	12.5	3.73	12.1	3.60	11.7	3.47	10.9	3.22
		-8.5	-9.1	14.1	4.16	13.3	3.90	12.5	3.64	12.1	3.52	11.7	3.39	10.9	3.15
		-7.0	-7.6	14.1	4.01	13.3	3.76	12.5	3.51	12.1	3.39	11.7	3.27	10.9	3.04
		-5.0	-5.6	14.1	3.82	13.3	3.58	12.5	3.35	12.1	3.24	11.7	3.13	10.9	2.91
		-3.0	-3.7	14.1	3.66	13.3	3.43	12.5	3.22	12.1	3.11	11.7	3.00	10.9	2.79
		0.0	-0.7	14.1	3.43	13.3	3.23	12.5	3.02	12.1	2.92	11.7	2.83	10.9	2.63
		3.0	2.2	14.1	3.24	13.3	3.05	12.5	2.86	12.1	2.77	11.7	2.68	10.9	2.50
		5.0	4.1	14.1	3.13	13.3	2.94	12.5	2.76	12.1	2.68	11.7	2.59	10.9	2.41
		7.0	6.0	14.1	3.02	13.3	2.85	12.5	2.68	12.1	2.59	11.7	2.51	10.9	2.34
		9.0	7.9	14.1	2.93	13.3	2.76	12.5	2.59	12.1	2.51	11.7	2.43	10.9	2.27
		11.0	9.8	14.1	2.84	13.3	2.68	12.5	2.52	12.1	2.44	11.7	2.36	10.9	2.21
		13.0	11.8	14.1	2.75	13.3	2.59	12.5	2.44	12.1	2.37	11.7	2.29	10.9	2.14
		15.0	13.7	14.1	2.67	13.3	2.52	12.5	2.37	12.1	2.30	11.7	2.23	10.9	2.09

4TW31482-2A

4 Capacity tables

4 - 3 Heating capacity tables

REYQ10P8

TC: Total Capacity: kW ; PI: Power Input: kW (compressor + outdoor fan motor)

Combination (%)	Capacity index (kW)	Outdoor air temp.		Indoor air temperature: °CDB											
				16.0		18.0		20.0		21.0		22.0		24.0	
				TC	PI	TC	PI	TC	PI	TC	PI	TC	PI	TC	PI
		°CDB	°CWB	kW	kW	kW	kW	kW	kW	kW	kW	kW	kW	kW	kW
130	325 (36.40)	-19.8	-20.0	20.6	5.42	20.6	5.79	20.5	6.16	20.5	6.35	20.4	6.53	20.4	6.90
		-18.8	-19.0	21.0	5.54	20.9	5.90	20.9	6.27	20.8	6.45	20.8	6.63	20.7	6.99
		-16.7	-17.0	21.8	5.79	21.7	6.14	21.6	6.49	21.6	6.66	21.6	6.84	21.5	7.19
		-13.7	-15.0	22.7	6.05	22.6	6.38	22.5	6.72	22.5	6.89	22.5	7.05	22.4	7.39
		-11.8	-13.0	23.7	6.31	23.6	6.63	23.5	6.95	23.5	7.11	23.4	7.27	23.4	7.59
		-9.8	-11.0	24.7	6.58	24.7	6.88	24.6	7.19	24.6	7.34	24.5	7.49	24.5	7.80
		-9.5	-10.0	25.3	6.71	25.3	7.01	25.2	7.31	25.1	7.46	25.1	7.61	25.0	7.90
		-8.5	-9.1	25.9	6.83	25.8	7.12	25.7	7.41	25.7	7.56	25.7	7.70	25.6	8.00
		-7.0	-7.6	26.8	7.02	26.7	7.30	26.7	7.59	26.6	7.73	26.6	7.87	26.5	8.15
		-5.0	-5.6	28.2	7.28	28.1	7.54	28.0	7.81	28.0	7.94	28.0	8.08	27.9	8.35
		-3.0	-3.7	29.5	7.51	29.5	7.77	29.4	8.02	29.4	8.15	29.3	8.27	29.3	8.53
		0.0	-0.7	31.9	7.86	31.8	8.10	31.8	8.33	31.7	8.45	31.7	8.57	31.6	8.80
		3.0	2.2	34.4	8.18	34.3	8.40	34.3	8.62	34.2	8.73	34.2	8.84	34.1	9.05
		5.0	4.1	36.1	8.38	36.1	8.59	36.0	8.80	36.0	8.90	35.9	9.00	35.7	9.14
		7.0	6.0	38.0	8.57	37.9	8.77	37.8	8.96	37.8	9.06	37.8	9.16	35.7	8.59
		9.0	7.9	39.9	8.75	39.8	8.94	39.8	9.12	39.6	9.19	38.3	8.81	35.7	8.07
		11.0	9.8	41.9	8.92	41.8	9.10	41.0	8.99	39.6	8.63	38.3	8.28	35.7	7.60
		13.0	11.8	44.1	9.09	43.6	9.10	41.0	8.42	39.6	8.09	38.3	7.77	35.7	7.14
		15.0	13.7	46.2	9.20	43.6	8.56	41.0	7.93	39.6	7.62	38.3	7.32	35.7	6.73
120	300 (33.60)	-19.8	-20.0	20.6	5.92	20.5	6.26	20.4	6.60	20.4	6.77	20.4	6.94	20.3	7.28
		-18.8	-19.0	20.9	6.03	20.8	6.37	20.8	6.70	20.7	6.87	20.7	7.04	20.6	7.37
		-16.7	-17.0	21.7	6.26	21.6	6.58	21.6	6.91	21.5	7.07	21.5	7.23	21.4	7.55
		-13.7	-15.0	22.6	6.50	22.5	6.81	22.4	7.12	22.4	7.27	22.4	7.43	22.3	7.74
		-11.8	-13.0	23.6	6.75	23.5	7.04	23.4	7.34	23.4	7.48	23.4	7.63	23.3	7.93
		-9.8	-11.0	24.7	6.99	24.6	7.27	24.5	7.56	24.5	7.70	24.5	7.84	24.4	8.12
		-9.5	-10.0	25.2	7.11	25.2	7.39	25.1	7.66	25.1	7.80	25.0	7.94	25.0	8.21
		-8.5	-9.1	25.8	7.22	25.7	7.49	25.6	7.76	25.6	7.90	25.6	8.03	25.5	8.30
		-7.0	-7.6	26.7	7.40	26.7	7.66	26.6	7.92	26.6	8.05	26.5	8.18	26.5	8.44
		-5.0	-5.6	28.1	7.64	28.0	7.88	27.9	8.13	27.9	8.25	27.9	8.38	27.8	8.62
		-3.0	-3.7	29.5	7.85	29.4	8.09	29.3	8.32	29.3	8.44	29.3	8.56	29.2	8.79
		0.0	-0.7	31.8	8.18	31.7	8.40	31.7	8.62	31.6	8.72	31.6	8.83	31.5	9.05
		3.0	2.2	34.3	8.48	34.2	8.68	34.2	8.88	34.1	8.98	34.1	9.08	32.9	8.82
		5.0	4.1	36.0	8.66	36.0	8.85	35.9	9.04	35.9	9.14	35.4	9.04	32.9	8.28
		7.0	6.0	37.9	8.84	37.8	9.02	37.7	9.20	36.6	8.85	35.4	8.49	32.9	7.79
		9.0	7.9	39.8	9.00	39.7	9.17	37.8	8.66	36.6	8.32	35.4	7.98	32.9	7.33
		11.0	9.8	41.8	9.16	40.2	8.79	37.8	8.14	36.6	7.83	35.4	7.52	32.9	6.91
		13.0	11.8	42.7	8.86	40.2	8.24	37.8	7.64	36.6	7.35	35.4	7.06	32.9	6.50
		15.0	13.7	42.7	8.34	40.2	7.76	37.8	7.20	36.6	6.93	35.4	6.66	32.9	6.14
110	275 (30.80)	-19.8	-20.0	20.5	6.42	20.4	6.73	20.3	7.04	20.3	7.20	20.3	7.36	20.2	7.67
		-18.8	-19.0	20.8	6.52	20.7	6.83	20.7	7.14	20.7	7.29	20.6	7.44	20.6	7.75
		-16.7	-17.0	21.6	6.73	21.5	7.03	21.5	7.32	21.4	7.47	21.4	7.62	21.4	7.91
		-13.7	-15.0	22.5	6.95	22.4	7.24	22.4	7.52	22.3	7.66	22.3	7.80	22.2	8.09
		-11.8	-13.0	23.5	7.18	23.4	7.45	23.3	7.72	23.3	7.86	23.3	7.99	23.2	8.26
		-9.8	-11.0	24.6	7.40	24.5	7.66	24.4	7.92	24.4	8.05	24.4	8.18	24.3	8.44
		-9.5	-10.0	25.1	7.52	25.1	7.77	25.0	8.02	25.0	8.15	24.9	8.27	24.9	8.53
		-8.5	-9.1	25.7	7.62	25.6	7.86	25.6	8.11	25.5	8.23	25.5	8.36	25.4	8.60
		-7.0	-7.6	26.6	7.78	26.6	8.02	26.5	8.26	26.5	8.38	26.4	8.50	26.4	8.73
		-5.0	-5.6	28.0	8.00	27.9	8.23	27.9	8.45	27.8	8.56	27.8	8.68	27.7	8.90
		-3.0	-3.7	29.4	8.20	29.3	8.41	29.2	8.63	29.2	8.74	29.2	8.84	29.1	9.06
		0.0	-0.7	31.7	8.50	31.6	8.70	31.6	8.90	31.6	9.00	31.5	9.10	30.2	8.71
		3.0	2.2	34.2	8.77	34.1	8.96	34.1	9.14	33.5	9.01	32.4	8.64	30.2	7.92
		5.0	4.1	35.9	8.94	35.9	9.12	34.7	8.81	33.5	8.47	32.4	8.12	30.2	7.45
		7.0	6.0	37.8	9.10	36.9	8.94	34.7	8.28	33.5	7.96	32.4	7.64	30.2	7.02
		9.0	7.9	39.1	9.03	36.9	8.40	34.7	7.79	33.5	7.49	32.4	7.19	30.2	6.61
		11.0	9.8	39.1	8.49	36.9	7.90	34.7	7.33	33.5	7.05	32.4	6.78	30.2	6.24
		13.0	11.8	39.1	7.96	36.9	7.42	34.7	6.89	33.5	6.63	32.4	6.38	30.2	5.88
		15.0	13.7	39.1	7.50	36.9	7.00	34.7	6.50	33.5	6.26	32.4	6.02	30.2	5.56
100	250 (28.00)	-19.8	-20.0	20.4	6.92	20.3	7.20	20.2	7.49	20.2	7.63	20.2	7.77	20.1	8.05
		-18.8	-19.0	20.7	7.01	20.7	7.29	20.6	7.57	20.6	7.71	20.5	7.85	20.5	8.13
		-16.7	-17.0	21.5	7.20	21.4	7.47	21.4	7.74	21.4	7.88	21.3	8.01	21.3	8.28
		-13.7	-15.0	22.4	7.41	22.3	7.66	22.3	7.92	22.2	8.05	22.2	8.18	22.2	8.44
		-11.8	-13.0	23.4	7.61	23.3	7.86	23.3	8.10	23.2	8.23	23.2	8.35	23.1	8.60
		-9.8	-11.0	24.5	7.82	24.4	8.05	24.3	8.29	24.3	8.40	24.3	8.52	24.2	8.76
		-9.5	-10.0	25.0	7.92	25.0	8.15	24.9	8.38	24.9	8.49	24.9	8.61	24.8	8.84
		-8.5	-9.1	25.6	8.01	25.5	8.24	25.5	8.46	25.4	8.57	25.4	8.68	25.4	8.91
		-7.0	-7.6	26.5	8.16	26.5	8.38	26.4	8.60	26.4	8.70	26.4	8.81	26.3	9.03
		-5.0	-5.6	27.9	8.36	27.8	8.57	27.8	8.77	27.7	8.87	27.7	8.98	27.5	9.07
		-3.0	-3.7	29.3	8.54	29.2	8.74	29.1	8.93	29.1	9.03	29.1	9.13	27.5	8.54
		0.0	-0.7	31.6	8.82	31.6	9.00	31.5	9.18	30.5	8.81	29.5	8.45	27.5	7.75
		3.0	2.2	34.1	9.07	33.5	9.01	31.5	8.34	30.5	8.02	29.5	7.70	27.5	7.07
		5.0	4.1	35.5	9.10	33.5	8.46	31.5	7.84	30.5	7.54	29.5	7.24	27.5	6.66
		7.0	6.0	35.5	8.54	33.5	7.95	31.5	7.38	30.5	7.10	29.5	6.82	27.5	6.28
		9.0	7.9	35.5	8.03	33.5	7.48	31.5	6.95	30.5	6.69	29.5	6.43	27.5	5.93
		11.0	9.8	35.5	7.56	33.5	7.05	31.5	6.55	30.5	6.31	29.5	6.07	27.5	5.60
		13.0	11.8	35.5	7.10	33.5	6.63	31.5	6.17	30.5	5.94	29.5	5.72	27.5	5.28
		15.0	13.7	35.5	6.70	33.5	6.26	31.5	5.83	30.5	5.62	29.5	5.41	27.5	5.00

4TW31482-2A

NOTES - ANMERKUNGEN - Σημειώσεις - NOTAS - REMARQUES - NOTE - OPMERKINGEN - примечания - NOTLAR

1 is shown as reference. When selecting the unit models, avoid the Outdoor air temperature range shown by .

dient als Verweis. Vermeiden Sie bei der Auswahl der Gerätemodelle den als markierten Temperaturbereich der Außenluft

Η είναι ενδεικτική. κατά την επιλογή των μοντέλων των μονάδων, αποφύγετε το εύρος θερμοκρασίας εξωτερικού αέρα που υποδεικνύεται

se muestra como referencia. Cuando seleccione los modelos de unidad, evite el intervalo de temperaturas del aire exterior indicado mediante

est montré comme référence.Lors du choix des modèles d'unités, évitez la plage de températures de l'air extérieur illustré par

valori riportati unicamente come riferimento. Nel selezionare i modelli delle unità, non considerare i valori di temperatura dell'aria esterna indicati con il colore

is als referentie getoond. Wanneer modellen van eenheden worden gekozen, vermijd dan het bereik van buitenluchttemperaturen geïllustreerd door

показан как. При выборе модели устройства избегайте внешнюю температуру воздуха, указанную в

referans olarak gösterilmektedir. Ünite modellerini seçerken, belirtilen Dış hava sıcaklığı aralığından kaçının

2 The above table shows the average value of conditions which may occur.

Die obige Tabelle zeigt den Durchschnittswert der Bedingungen, die auftreten können.

Στον παραπάνω πίνακα αναγράφεται η μέση τιμή για συνθήκες που μπορεί να προκύψουν.

La tabla de arriba muestra el valor medio de condiciones que pueden ocurrir.

Le tableau ci-dessus donne la valeur moyenne pour des conditions qui peuvent survenir.

La tabella in alto mostra il valore delle condizioni medie che si possono riscontrare.

De tabel hierboven geeft de gemiddelde waarde aan van situaties die kunnen voorvallen.

Таблица расположенная выше показывает среднее значение условий, которые могут наступить.

Yukarıdaki tablo meydana gelebilecek koşulların ortalama değerini göstermektedir.

4 Capacity tables

4 - 3 Heating capacity tables

REYQ10P8

TC: Total Capacity: kW ; PI: Power Input: kW (compressor + outdoor fan motor)

Combination (%)	Capacity index (kW)	Outdoor air temp.		Indoor air temperature: °CDB											
				16.0		18.0		20.0		21.0		22.0		24.0	
				TC	PI	TC	PI	TC	PI	TC	PI	TC	PI	TC	PI
		°CDB	°CWB	kW	kW	kW	kW	kW	kW	kW	kW	kW	kW	kW	kW
90%	225 (25.20)	-19.8	-20.0	20.3	7.42	20.2	7.67	20.2	7.93	20.1	8.06	20.1	8.18	20.1	8.44
		-18.8	-19.0	20.6	7.50	20.6	7.75	20.5	8.00	20.5	8.13	20.5	8.25	20.4	8.51
		-16.7	-17.0	21.4	7.68	21.4	7.92	21.3	8.16	21.3	8.28	21.3	8.40	21.2	8.64
		-13.7	-15.0	22.3	7.86	22.2	8.09	22.2	8.32	22.2	8.44	22.1	8.55	22.1	8.78
		-11.8	-13.0	23.3	8.04	23.2	8.27	23.2	8.49	23.1	8.60	23.1	8.71	23.1	8.93
		-9.8	-11.0	24.4	8.23	24.3	8.44	24.3	8.65	24.2	8.76	24.2	8.86	24.2	9.08
		-9.5	-10.0	24.9	8.32	24.9	8.53	24.8	8.74	24.8	8.84	24.8	8.94	24.7	9.13
		-8.5	-9.1	25.5	8.41	25.4	8.61	25.4	8.81	25.4	8.91	25.3	9.01	24.7	8.88
		-7.0	-7.6	26.4	8.54	26.4	8.74	26.3	8.93	26.3	9.03	26.3	9.13	24.7	8.48
		-5.0	-5.6	27.8	8.72	27.7	8.91	27.7	9.09	27.4	9.07	26.5	8.70	24.7	7.97
		-3.0	-3.7	29.2	8.89	29.1	9.06	28.4	8.88	27.4	8.53	26.5	8.19	24.7	7.51
		0.0	-0.7	31.5	9.13	30.2	8.70	28.4	8.06	27.4	7.75	26.5	7.44	24.7	6.84
		3.0	2.2	32.0	8.50	30.2	7.92	28.4	7.34	27.4	7.06	26.5	6.79	24.7	6.25
		5.0	4.1	32.0	7.99	30.2	7.45	28.4	6.92	27.4	6.66	26.5	6.40	24.7	5.90
		7.0	6.0	32.0	7.52	30.2	7.01	28.4	6.52	27.4	6.28	26.5	6.04	24.7	5.57
		9.0	7.9	32.0	7.08	30.2	6.61	28.4	6.15	27.4	5.92	26.5	5.70	24.7	5.26
		11.0	9.8	32.0	6.67	30.2	6.23	28.4	5.81	27.4	5.60	26.5	5.39	24.7	4.98
		13.0	11.8	32.0	6.28	30.2	5.87	28.4	5.47	27.4	5.28	26.5	5.08	24.7	4.71
		15.0	13.7	32.0	5.93	30.2	5.55	28.4	5.18	27.4	5.00	26.5	4.82	24.7	4.46
80%	200 (22.40)	-19.8	-20.0	20.2	7.92	20.1	8.14	20.1	8.37	20.1	8.48	20.0	8.60	20.0	8.82
		-18.8	-19.0	20.5	7.99	20.5	8.21	20.4	8.44	20.4	8.55	20.4	8.66	20.3	8.88
		-16.7	-17.0	21.3	8.15	21.3	8.36	21.2	8.58	21.2	8.68	21.2	8.79	21.1	9.01
		-13.7	-15.0	22.2	8.31	22.1	8.52	22.1	8.72	22.1	8.83	22.1	8.93	22.0	9.10
		-11.8	-13.0	23.2	8.48	23.1	8.67	23.1	8.87	23.1	8.97	23.0	9.07	22.0	8.61
		-9.8	-11.0	24.3	8.64	24.2	8.83	24.2	9.02	24.1	9.11	23.6	8.88	22.0	8.13
		-9.5	-10.0	24.8	8.73	24.8	8.91	24.8	9.09	24.4	8.99	23.6	8.62	22.0	7.90
		-8.5	-9.1	25.4	8.80	25.3	8.98	25.2	9.11	24.4	8.74	23.6	8.39	22.0	7.69
		-7.0	-7.6	26.3	8.92	26.3	9.10	25.2	8.69	24.4	8.35	23.6	8.01	22.0	7.35
		-5.0	-5.6	27.7	9.08	26.8	8.82	25.2	8.17	24.4	7.85	23.6	7.53	22.0	6.92
		-3.0	-3.7	28.4	8.92	26.8	8.30	25.2	7.69	24.4	7.40	23.6	7.10	22.0	6.53
		0.0	-0.7	28.4	8.09	26.8	7.54	25.2	7.00	24.4	6.73	23.6	6.47	22.0	5.96
		3.0	2.2	28.4	7.37	26.8	6.88	25.2	6.39	24.4	6.16	23.6	5.92	22.0	5.47
		5.0	4.1	28.4	6.94	26.8	6.48	25.2	6.03	24.4	5.81	23.6	5.59	22.0	5.17
		7.0	6.0	28.4	6.54	26.8	6.11	25.2	5.69	24.4	5.49	23.6	5.29	22.0	4.89
		9.0	7.9	28.4	6.17	26.8	5.77	25.2	5.38	24.4	5.19	23.6	5.00	22.0	4.63
		11.0	9.8	28.4	5.83	26.8	5.45	25.2	5.09	24.4	4.91	23.6	4.73	22.0	4.39
		13.0	11.8	28.4	5.49	26.8	5.15	25.2	4.81	24.4	4.64	23.6	4.48	22.0	4.15
		15.0	13.7	28.4	5.20	26.8	4.88	25.2	4.56	24.4	4.40	23.6	4.25	22.0	3.95
70%	175 (19.60)	-19.8	-20.0	20.1	8.41	20.0	8.61	20.0	8.81	20.0	8.91	19.9	9.01	19.2	8.71
		-18.8	-19.0	20.4	8.48	20.4	8.68	20.3	8.87	20.3	8.97	20.3	9.07	19.2	8.52
		-16.7	-17.0	21.2	8.62	21.2	8.81	21.1	8.99	21.1	9.09	20.6	8.87	19.2	8.12
		-13.7	-15.0	22.1	8.76	22.1	8.94	22.0	9.12	21.3	8.78	20.6	8.42	19.2	7.72
		-11.8	-13.0	23.1	8.91	23.0	9.08	22.1	8.66	21.3	8.31	20.6	7.98	19.2	7.32
		-9.8	-11.0	24.2	9.06	23.5	8.82	22.1	8.17	21.3	7.86	20.6	7.54	19.2	6.93
		-9.5	-10.0	24.7	9.13	23.5	8.57	22.1	7.94	21.3	7.63	20.6	7.33	19.2	6.74
		-8.5	-9.1	24.9	8.96	23.5	8.34	22.1	7.73	21.3	7.43	20.6	7.14	19.2	6.56
		-7.0	-7.6	24.9	8.56	23.5	7.97	22.1	7.39	21.3	7.11	20.6	6.83	19.2	6.29
		-5.0	-5.6	24.9	8.04	23.5	7.49	22.1	6.96	21.3	6.69	20.6	6.43	19.2	5.93
		-3.0	-3.7	24.9	7.57	23.5	7.06	22.1	6.56	21.3	6.32	20.6	6.08	19.2	5.61
		0.0	-0.7	24.9	6.89	23.5	6.44	22.1	5.99	21.3	5.77	20.6	5.56	19.2	5.13
		3.0	2.2	24.9	6.30	23.5	5.89	22.1	5.49	21.3	5.29	20.6	5.10	19.2	4.72
		5.0	4.1	24.9	5.94	23.5	5.56	22.1	5.19	21.3	5.01	20.6	4.83	19.2	4.47
		7.0	6.0	24.9	5.61	23.5	5.26	22.1	4.91	21.3	4.74	20.6	4.57	19.2	4.24
		9.0	7.9	24.9	5.31	23.5	4.97	22.1	4.65	21.3	4.49	20.6	4.33	19.2	4.02
		11.0	9.8	24.9	5.02	23.5	4.71	22.1	4.41	21.3	4.26	20.6	4.11	19.2	3.82
		13.0	11.8	24.9	4.74	23.5	4.45	22.1	4.17	21.3	4.03	20.6	3.89	19.2	3.62
		15.0	13.7	24.9	4.50	23.5	4.23	22.1	3.96	21.3	3.83	20.6	3.70	19.2	3.45
60%	150 (16.80)	-19.8	-20.0	20.0	8.91	19.9	9.08	18.9	8.53	18.3	8.19	17.7	7.86	16.5	7.22
		-18.8	-19.0	20.3	8.97	20.1	9.01	18.9	8.34	18.3	8.02	17.7	7.70	16.5	7.07
		-16.7	-17.0	21.1	9.09	20.1	8.59	18.9	7.96	18.3	7.65	17.7	7.35	16.5	6.75
		-13.7	-15.0	21.3	8.78	20.1	8.16	18.9	7.57	18.3	7.28	17.7	6.99	16.5	6.43
		-11.8	-13.0	21.3	8.31	20.1	7.74	18.9	7.18	18.3	6.91	17.7	6.64	16.5	6.11
		-9.8	-11.0	21.3	7.85	20.1	7.31	18.9	6.79	18.3	6.54	17.7	6.29	16.5	5.80
		-9.5	-10.0	21.3	7.62	20.1	7.11	18.9	6.61	18.3	6.36	17.7	6.12	16.5	5.64
		-8.5	-9.1	21.3	7.43	20.1	6.93	18.9	6.44	18.3	6.20	17.7	5.96	16.5	5.50
		-7.0	-7.6	21.3	7.10	20.1	6.63	18.9	6.17	18.3	5.94	17.7	5.72	16.5	5.28
		-5.0	-5.6	21.3	6.69	20.1	6.25	18.9	5.82	18.3	5.61	17.7	5.40	16.5	4.99
		-3.0	-3.7	21.3	6.32	20.1	5.90	18.9	5.50	18.3	5.31	17.7	5.11	16.5	4.73
		0.0	-0.7	21.3	5.77	20.1	5.40	18.9	5.04	18.3	4.86	17.7	4.69	16.5	4.35
		3.0	2.2	21.3	5.29	20.1	4.96	18.9	4.64	18.3	4.48	17.7	4.32	16.5	4.01
		5.0	4.1	21.3	5.00	20.1	4.69	18.9	4.39	18.3	4.24	17.7	4.10	16.5	3.81
		7.0	6.0	21.3	4.74	20.1	4.45	18.9	4.16	18.3	4.03	17.7	3.89	16.5	3.62
		9.0	7.9	21.3	4.49	20.1	4.22	18.9	3.95	18.3	3.82	17.7	3.69	16.5	3.44
		11.0	9.8	21.3	4.25	20.1	4.00	18.9	3.75	18.3	3.63	17.7	3.51	16.5	3.27
		13.0	11.8	21.3	4.03	20.1	3.79	18.9	3.56	18.3	3.45	17.7	3.33	16.5	3.11
		15.0	13.7	21.3	3.83	20.1	3.61	18.9	3.39	18.3	3.28	17.7	3.18	16.5	2.97
50%	125 (14.00)	-19.8	-20.0	17.8	7.91	16.8	7.37	15.8	6.85	15.2	6.59	14.7	6.34	13.7	5.84
		-18.8	-19.0	17.8	7.74	16.8	7.22	15.8	6.70	15.2	6.45	14.7	6.21	13.7	5.72
		-16.7	-17.0	17.8	7.39	16.8	6.90	15.8	6.41	15.2	6.17	14.7	5.94	13.7	5.48
		-13.7	-15.0	17.8	7.04	16.8	6.57	15.8	6.11	15.2	5.89	14.7	5.66	13.7	5.23
		-11.8	-13.0	17.8	6.68	16.8	6.24	15.8	5.81	15.2	5.60	14.7	5.39	13.7	4.98
		-9.8	-11.0	17.8	6.32	16.8	5.91	15.8	5.51	15.2	5.31	14.7	5.12	13.7	4.73
		-9.5	-10.0	17.8	6.15	16.8	5.75	15.8	5.36	15.2	5.17	14.7	4.98	13.7	4.61
		-8.5	-9.1	17.8	6.00	16.8	5.61	15.8	5.23	15.2	5.05	14.7	4.87	13.7	4.51
		-7.0	-7.6	17.8	5.75	16.8	5.38	15.8	5.02	15.2	4.85	14.7	4.67	13.7	4.33
		-5.0	-5.6	17.8	5.43	16.8	5.09	15.8	4.75	15.2	4.59	14.7	4.43	13.7	4.11
		-3.0	-3.7	17.8	5.14	16.8	4.82	15.8	4.51	15.2	4.35	14.7	4.20	13.7	3.90
		0.0	-0.7	17.8	4.71	16.8	4.43	15.8	4.15	15.2	4.01	14.7	3.87	13.7	3.60
		3.0	2.2	17.8	4.34	16.8	4.08	15.8	3.83	15.2	3.70	14.7	3.58	13.7	3.34
		5.0	4.1	17.8	4.12	16.8	3.87	15.8	3.64	15.2	3.52	14.7	3.40	13.7	3.17
		7.0	6.0	17.8	3.91	16.8	3.68	15.8	3.46	15.2	3.35	14.7	3.24	13.7	3.02
		9.0	7.9	17.8	3.71	16.8	3.50	15.8	3.29	15.2	3.19	14.7	3.09	13.7	2.88
		11.0	9.8	17.8	3.53	16.8	3.33	15.8	3.13	15.2	3.04	14.7	2.94	13.7	2.75
		13.0	11.8	17.8	3.35	16.8	3.16	15.8	2.98	15.2	2.89	14.7	2.80	13.7	2.62
		15.0	13.7	17.8	3.19	16.8	3.02	15.8	2.85	15.2	2.76	14.7	2.68	13.7	2.51

4TW31482-2A

4 Capacity tables

4 - 3 Heating capacity tables

REYQ12P9

TC: Total Capacity: kW ; PI: Power Input: kW (compressor + outdoor fan motor)

Combination (%)	Capacity index (kW)	Outdoor air temp.		Indoor air temperature: °CDB											
				16.0		18.0		20.0		21.0		22.0		24.0	
				TC	PI	TC	PI	TC	PI	TC	PI	TC	PI	TC	PI
		°CDB	°CWB	kW	kW	kW	kW	kW	kW	kW	kW	kW	kW	kW	kW
130	390 (43.55)	-19.8	-20.0	21.3	4.20	21.2	4.64	21.2	5.09	21.1	5.31	21.1	5.53	21.0	5.98
		-18.8	-19.0	21.7	4.34	21.6	4.78	21.5	5.21	21.5	5.43	21.4	5.65	21.3	6.09
		-16.7	-17.0	22.5	4.63	22.4	5.05	22.3	5.48	22.3	5.69	22.2	5.90	22.2	6.32
		-13.7	-15.0	23.4	4.94	23.3	5.34	23.2	5.75	23.2	5.95	23.1	6.15	23.1	6.55
		-11.8	-13.0	24.4	5.25	24.3	5.64	24.2	6.02	24.2	6.22	24.2	6.41	24.1	6.80
		-9.8	-11.0	25.5	5.57	25.4	5.94	25.3	6.30	25.3	6.49	25.3	6.67	25.2	7.04
		-9.5	-10.0	26.1	5.72	26.0	6.08	25.9	6.44	25.9	6.62	25.9	6.80	25.8	7.16
		-8.5	-9.1	26.7	5.86	26.6	6.22	26.5	6.57	26.4	6.74	26.4	6.92	26.3	7.27
		-7.0	-7.6	27.6	6.09	27.5	6.43	27.5	6.77	27.4	6.94	27.4	7.11	27.3	7.45
		-5.0	-5.6	29.0	6.39	28.9	6.72	28.8	7.04	28.8	7.20	28.8	7.36	28.7	7.68
		-3.0	-3.7	30.4	6.67	30.3	6.98	30.3	7.28	30.2	7.43	30.2	7.59	30.1	7.89
		0.0	-0.7	32.8	7.09	32.7	7.37	32.7	7.65	32.6	7.79	32.6	7.93	32.5	8.22
		3.0	2.2	35.4	7.46	35.3	7.72	35.2	7.98	35.2	8.11	35.1	8.24	35.0	8.51
		5.0	4.1	37.2	7.69	37.1	7.94	37.0	8.19	37.0	8.31	36.9	8.44	36.8	8.69
		7.0	6.0	39.0	7.91	39.0	8.15	38.9	8.38	38.8	8.50	38.8	8.62	38.7	8.86
		9.0	7.9	41.0	8.12	40.9	8.34	40.8	8.57	40.8	8.68	40.8	8.79	40.7	9.02
		11.0	9.8	43.1	8.32	43.0	8.53	42.9	8.74	42.9	8.85	42.8	8.96	42.5	9.09
		13.0	11.8	45.3	8.51	45.2	8.71	45.2	8.92	45.1	9.02	45.1	9.12	42.5	8.53
		15.0	13.7	47.6	8.69	47.5	8.88	47.4	9.07	47.2	9.11	45.6	8.75	42.5	8.05
120	360 (40.20)	-19.8	-20.0	21.2	4.80	21.1	5.21	21.1	5.62	21.0	5.83	21.0	6.03	20.9	6.44
		-18.8	-19.0	21.6	4.93	21.5	5.33	21.4	5.74	21.4	5.94	21.3	6.14	21.3	6.54
		-16.7	-17.0	22.4	5.20	22.3	5.59	22.2	5.98	22.2	6.17	22.1	6.37	22.1	6.75
		-13.7	-15.0	23.3	5.49	23.2	5.86	23.1	6.23	23.1	6.42	23.0	6.60	23.0	6.97
		-11.8	-13.0	24.3	5.77	24.2	6.13	24.1	6.49	24.1	6.66	24.1	6.84	24.0	7.20
		-9.8	-11.0	25.4	6.06	25.3	6.40	25.2	6.74	25.2	6.91	25.2	7.08	25.1	7.42
		-9.5	-10.0	26.0	6.21	25.9	6.54	25.8	6.87	25.8	7.04	25.8	7.20	25.7	7.53
		-8.5	-9.1	26.5	6.34	26.5	6.66	26.4	6.99	26.4	7.15	26.3	7.31	26.2	7.63
		-7.0	-7.6	27.5	6.55	27.4	6.86	27.4	7.18	27.3	7.33	27.3	7.49	27.2	7.80
		-5.0	-5.6	28.9	6.83	28.8	7.12	28.7	7.42	28.7	7.57	28.7	7.72	28.6	8.01
		-3.0	-3.7	30.3	7.08	30.2	7.37	30.2	7.65	30.1	7.79	30.1	7.93	30.0	8.21
		0.0	-0.7	32.7	7.47	32.6	7.73	32.6	7.99	32.5	8.12	32.5	8.25	32.4	8.51
		3.0	2.2	35.3	7.81	35.2	8.06	35.1	8.30	35.1	8.42	35.0	8.54	34.9	8.78
		5.0	4.1	37.0	8.03	37.0	8.26	36.9	8.49	36.9	8.60	36.8	8.72	36.7	8.94
		7.0	6.0	38.9	8.23	38.8	8.45	38.8	8.67	38.7	8.77	38.7	8.88	38.6	9.10
		9.0	7.9	40.9	8.42	40.8	8.63	40.7	8.84	40.7	8.94	40.7	9.04	39.2	8.78
		11.0	9.8	43.0	8.61	42.9	8.80	42.8	9.00	42.8	9.10	42.1	8.99	39.2	8.26
		13.0	11.8	45.2	8.79	45.1	8.97	45.0	9.14	43.6	8.79	42.1	8.44	39.2	7.77
		15.0	13.7	47.5	8.95	47.4	9.13	45.0	8.61	43.6	8.29	42.1	7.96	39.2	7.33
110	330 (36.85)	-19.8	-20.0	21.1	5.40	21.0	5.78	20.9	6.15	20.9	6.34	20.9	6.53	20.8	6.91
		-18.8	-19.0	21.5	5.52	21.4	5.89	21.3	6.26	21.3	6.44	21.2	6.63	21.2	7.00
		-16.7	-17.0	22.3	5.77	22.2	6.13	22.1	6.48	22.1	6.66	22.0	6.84	22.0	7.19
		-13.7	-15.0	23.2	6.03	23.1	6.37	23.0	6.71	23.0	6.88	23.0	7.05	22.9	7.40
		-11.8	-13.0	24.2	6.30	24.1	6.62	24.0	6.95	24.0	7.11	24.0	7.27	23.9	7.60
		-9.8	-11.0	25.3	6.56	25.2	6.87	25.1	7.18	25.1	7.34	25.1	7.50	25.0	7.81
		-9.5	-10.0	25.9	6.69	25.8	7.00	25.7	7.30	25.7	7.45	25.7	7.61	25.6	7.91
		-8.5	-9.1	26.4	6.81	26.4	7.11	26.3	7.41	26.3	7.56	26.2	7.70	26.1	8.00
		-7.0	-7.6	27.4	7.01	27.3	7.29	27.3	7.58	27.2	7.72	27.2	7.87	27.1	8.15
		-5.0	-5.6	28.8	7.26	28.7	7.53	28.6	7.81	28.6	7.94	28.6	8.08	28.5	8.35
		-3.0	-3.7	30.2	7.50	30.1	7.76	30.0	8.01	30.0	8.14	30.0	8.27	29.9	8.53
		0.0	-0.7	32.6	7.85	32.5	8.09	32.5	8.33	32.4	8.45	32.4	8.57	32.3	8.80
		3.0	2.2	35.1	8.17	35.1	8.39	35.0	8.61	35.0	8.72	34.9	8.83	34.9	9.05
		5.0	4.1	36.9	8.36	36.9	8.57	36.8	8.78	36.8	8.89	36.7	8.99	35.9	8.93
		7.0	6.0	38.8	8.55	38.7	8.75	38.7	8.95	38.6	9.05	38.6	9.15	35.9	8.41
		9.0	7.9	40.8	8.73	40.7	8.92	40.6	9.11	39.9	8.96	38.6	8.61	35.9	7.92
		11.0	9.8	42.8	8.89	42.8	9.07	41.3	8.77	39.9	8.44	38.6	8.11	35.9	7.47
		13.0	11.8	45.1	9.06	43.9	8.87	41.3	8.24	39.9	7.93	38.6	7.63	35.9	7.03
		15.0	13.7	46.6	8.97	43.9	8.36	41.3	7.78	39.9	7.49	38.6	7.20	35.9	6.64
100	300 (33.50)	-19.8	-20.0	21.0	6.00	20.9	6.34	20.8	6.69	20.8	6.86	20.8	7.03	20.7	7.37
		-18.8	-19.0	21.3	6.11	21.3	6.45	21.2	6.78	21.2	6.95	21.1	7.12	21.1	7.46
		-16.7	-17.0	22.1	6.34	22.1	6.66	22.0	6.99	22.0	7.15	21.9	7.31	21.9	7.63
		-13.7	-15.0	23.1	6.58	23.0	6.89	22.9	7.20	22.9	7.35	22.9	7.51	22.8	7.82
		-11.8	-13.0	24.1	6.82	24.0	7.11	23.9	7.41	23.9	7.56	23.9	7.71	23.8	8.00
		-9.8	-11.0	25.2	7.06	25.1	7.34	25.0	7.62	25.0	7.77	25.0	7.91	24.9	8.19
		-9.5	-10.0	25.8	7.18	25.7	7.46	25.6	7.73	25.6	7.87	25.6	8.01	25.5	8.28
		-8.5	-9.1	26.3	7.29	26.3	7.56	26.2	7.83	26.2	7.96	26.1	8.10	26.1	8.37
		-7.0	-7.6	27.3	7.46	27.2	7.72	27.2	7.99	27.1	8.12	27.1	8.25	27.0	8.51
		-5.0	-5.6	28.7	7.70	28.6	7.94	28.5	8.19	28.5	8.31	28.5	8.44	28.4	8.68
		-3.0	-3.7	30.1	7.91	30.0	8.14	29.9	8.38	29.9	8.50	29.9	8.61	29.8	8.85
		0.0	-0.7	32.5	8.23	32.4	8.45	32.4	8.66	32.3	8.77	32.3	8.88	32.2	9.10
		3.0	2.2	35.0	8.52	35.0	8.72	34.9	8.92	34.9	9.02	34.8	9.12	32.7	8.48
		5.0	4.1	36.8	8.70	36.8	8.89	36.7	9.08	36.3	9.04	35.1	8.68	32.7	7.98
		7.0	6.0	38.7	8.87	38.6	9.05	37.5	8.84	36.3	8.50	35.1	8.17	32.7	7.52
		9.0	7.9	40.7	9.03	39.9	8.96	37.5	8.32	36.3	8.01	35.1	7.70	32.7	7.09
		11.0	9.8	42.3	9.05	39.9	8.44	37.5	7.84	36.3	7.55	35.1	7.26	32.7	6.70
		13.0	11.8	42.3	8.49	39.9	7.93	37.5	7.38	36.3	7.11	35.1	6.84	32.7	6.32
		15.0	13.7	42.3	8.01	39.9	7.48	37.5	6.97	36.3	6.72	35.1	6.47	32.7	5.98

4TW31482-2A

NOTES - ANMERKUNGEN - Σημειώσεις - NOTAS - REMARQUES - NOTE - OPMERKINGEN - примечания - NOTLAR

1 is shown as reference. When selecting the unit models, avoid the Outdoor air temperature range shown by .

dient als Verweis. Vermeiden Sie bei der Auswahl der Gerätemodelle den als markierten Temperaturbereich der Außenluft

Η είναι ενδεικτική. κατά την επιλογή των μοντέλων των μονάδων, αποφύγετε το εύρος θερμοκρασίας εξωτερικού αέρα που υποδεικνύεται

se muestra como referencia. Cuando seleccione los modelos de unidad, evite el intervalo de temperaturas del aire exterior indicado mediante

est montré comme référence.Lors du choix des modèles d'unités, évitez la plage de températures de l'air extérieur illustré par

valori riportati unicamente come riferimento. Nel selezionare i modelli delle unità, non considerare i valori di temperatura dell'aria esterna indicati con il colore

is als referentie getoond. Wanneer modellen van eenheden worden gekozen, vermijd dan het bereik van buitenluchttemperaturen geïllustreerd door

показан как. При выборе модели устройства избегайте внешнюю температуру воздуха, указанную в

referans olarak gösterilmektedir. Ünite modellerini seçerken, belirtilen Dış hava sıcaklığı aralığından kaçının

2 The above table shows the average value of conditions which may occur.

Die obige Tabelle zeigt den Durchschnittswert der Bedingungen, die auftreten können.

Στον παραπάνω πίνακα αναγράφεται η μέση τιμή για συνθήκες που μπορεί να προκύψουν.

La tabla de arriba muestra el valor medio de condiciones que pueden ocurrir.

Le tableau ci-dessus donne la valeur moyenne pour des conditions qui peuvent survenir.

La tabella in alto mostra il valore delle condizioni medie che si possono riscontrare.

De tabel hierboven geeft de gemiddelde waarde aan van situaties die kunnen voorvallen.

Таблица расположенная выше показывает среднее значение условий, которые могут наступить.

Yukarıdaki tablo meydana gelebilecek koşulların ortalama değerini göstermektedir.

4 Capacity tables

4 - 3 Heating capacity tables

REYQ12P9

TC: Total Capacity: kW ; PI: Power Input: kW (compressor + outdoor fan motor)

Combination (%)	Capacity index (kW)	Outdoor air temp.		Indoor air temperature: °CDB											
				16.0		18.0		20.0		21.0		22.0		24.0	
				TC	PI	TC	PI	TC	PI	TC	PI	TC	PI	TC	PI
		°CDB	°CWB	kW	kW	kW	kW	kW	kW	kW	kW	kW	kW	kW	kW
90%	270 (30.15)	-19.8	-20.0	20.9	6.60	20.8	6.91	20.7	7.22	20.7	7.37	20.7	7.53	20.6	7.84
		-18.8	-19.0	21.2	6.70	21.2	7.00	21.1	7.31	21.1	7.46	21.0	7.61	21.0	7.91
		-16.7	-17.0	22.0	6.91	22.0	7.20	21.9	7.49	21.9	7.63	21.9	7.78	21.8	8.07
		-13.7	-15.0	22.9	7.12	22.9	7.40	22.8	7.68	22.8	7.82	22.8	7.96	22.7	8.24
		-11.8	-13.0	23.9	7.34	23.9	7.60	23.8	7.87	23.8	8.00	23.8	8.14	23.7	8.41
		-9.8	-11.0	25.1	7.56	25.0	7.81	24.9	8.07	24.9	8.19	24.9	8.32	24.8	8.57
		-9.5	-10.0	25.6	7.66	25.6	7.91	25.5	8.16	25.5	8.29	25.5	8.41	25.4	8.66
		-8.5	-9.1	26.2	7.76	26.1	8.00	26.1	8.25	26.1	8.37	26.0	8.49	26.0	8.73
		-7.0	-7.6	27.2	7.92	27.1	8.16	27.1	8.39	27.0	8.51	27.0	8.62	26.9	8.86
		-5.0	-5.6	28.6	8.13	28.5	8.35	28.4	8.58	28.4	8.69	28.4	8.80	28.3	9.02
		-3.0	-3.7	30.0	8.32	29.9	8.53	29.8	8.75	29.8	8.85	29.8	8.96	29.4	9.02
		0.0	-0.7	32.4	8.61	32.3	8.81	32.3	9.00	32.2	9.10	31.6	8.93	29.4	8.20
		3.0	2.2	34.9	8.87	34.9	9.05	33.8	8.81	32.7	8.47	31.6	8.14	29.4	7.49
		5.0	4.1	36.7	9.03	35.9	8.92	33.8	8.29	32.7	7.98	31.6	7.67	29.4	7.07
		7.0	6.0	38.1	9.01	35.9	8.40	33.8	7.81	32.7	7.52	31.6	7.23	29.4	6.67
		9.0	7.9	38.1	8.48	35.9	7.91	33.8	7.36	32.7	7.09	31.6	6.82	29.4	6.30
		11.0	9.8	38.1	7.99	35.9	7.46	33.8	6.95	32.7	6.70	31.6	6.45	29.4	5.96
		13.0	11.8	38.1	7.51	35.9	7.02	33.8	6.55	32.7	6.31	31.6	6.08	29.4	5.63
		15.0	13.7	38.1	7.09	35.9	6.64	33.8	6.19	32.7	5.98	31.6	5.76	29.4	5.34
80%	240 (26.80)	-19.8	-20.0	20.7	7.20	20.7	7.48	20.6	7.75	20.6	7.89	20.6	8.03	20.5	8.30
		-18.8	-19.0	21.1	7.29	21.1	7.56	21.0	7.83	21.0	7.96	21.0	8.10	20.9	8.37
		-16.7	-17.0	21.9	7.47	21.9	7.73	21.8	7.99	21.8	8.12	21.8	8.25	21.7	8.51
		-13.7	-15.0	22.8	7.66	22.8	7.91	22.7	8.16	22.7	8.28	22.7	8.41	22.6	8.66
		-11.8	-13.0	23.8	7.86	23.8	8.10	23.7	8.33	23.7	8.45	23.7	8.57	23.6	8.81
		-9.8	-11.0	24.9	8.05	24.9	8.28	24.8	8.51	24.8	8.62	24.8	8.73	24.7	8.96
		-9.5	-10.0	25.5	8.15	25.5	8.37	25.4	8.59	25.4	8.70	25.4	8.81	25.3	9.03
		-8.5	-9.1	26.1	8.24	26.0	8.45	26.0	8.67	26.0	8.78	25.9	8.88	25.9	9.10
		-7.0	-7.6	27.1	8.38	27.0	8.59	26.9	8.79	26.9	8.90	26.9	9.00	26.1	8.84
		-5.0	-5.6	28.4	8.56	28.4	8.76	28.3	8.96	28.3	9.06	28.1	9.05	26.1	8.32
		-3.0	-3.7	29.8	8.74	29.8	8.92	29.7	9.11	29.0	8.88	28.1	8.53	26.1	7.85
		0.0	-0.7	32.3	8.99	31.9	9.04	30.0	8.40	29.0	8.08	28.1	7.77	26.1	7.16
		3.0	2.2	33.9	8.84	31.9	8.25	30.0	7.67	29.0	7.38	28.1	7.10	26.1	6.55
		5.0	4.1	33.9	8.32	31.9	7.77	30.0	7.23	29.0	6.96	28.1	6.70	26.1	6.19
		7.0	6.0	33.9	7.84	31.9	7.32	30.0	6.82	29.0	6.57	28.1	6.33	26.1	5.86
		9.0	7.9	33.9	7.39	31.9	6.91	30.0	6.44	29.0	6.21	28.1	5.99	26.1	5.54
		11.0	9.8	33.9	6.97	31.9	6.53	30.0	6.09	29.0	5.88	28.1	5.67	26.1	5.25
		13.0	11.8	33.9	6.57	31.9	6.15	30.0	5.75	29.0	5.55	28.1	5.35	26.1	4.97
		15.0	13.7	33.9	6.21	31.9	5.83	30.0	5.45	29.0	5.26	28.1	5.08	26.1	4.72
70%	210 (23.45)	-19.8	-20.0	20.6	7.81	20.6	8.05	20.5	8.28	20.5	8.40	20.5	8.52	20.4	8.76
		-18.8	-19.0	21.0	7.88	20.9	8.12	20.9	8.35	20.9	8.47	20.9	8.59	20.8	8.82
		-16.7	-17.0	21.8	8.04	21.8	8.27	21.7	8.50	21.7	8.61	21.7	8.72	21.6	8.95
		-13.7	-15.0	22.7	8.21	22.7	8.43	22.6	8.64	22.6	8.75	22.6	8.86	22.5	9.08
		-11.8	-13.0	23.7	8.38	23.7	8.59	23.6	8.79	23.6	8.90	23.6	9.00	22.9	8.82
		-9.8	-11.0	24.8	8.55	24.8	8.75	24.7	8.95	24.7	9.04	24.6	9.08	22.9	8.34
		-9.5	-10.0	25.4	8.63	25.4	8.83	25.3	9.02	25.3	9.12	24.6	8.82	22.9	8.10
		-8.5	-9.1	26.0	8.71	25.9	8.90	25.9	9.09	25.4	8.94	24.6	8.58	22.9	7.89
		-7.0	-7.6	26.9	8.84	26.9	9.02	26.3	8.88	25.4	8.54	24.6	8.21	22.9	7.56
		-5.0	-5.6	28.3	9.00	27.9	9.00	26.3	8.36	25.4	8.04	24.6	7.73	22.9	7.12
		-3.0	-3.7	29.6	9.10	27.9	8.48	26.3	7.88	25.4	7.59	24.6	7.30	22.9	6.73
		0.0	-0.7	29.6	8.27	27.9	7.73	26.3	7.19	25.4	6.93	24.6	6.67	22.9	6.16
		3.0	2.2	29.6	7.56	27.9	7.06	26.3	6.58	25.4	6.35	24.6	6.12	22.9	5.66
		5.0	4.1	29.6	7.12	27.9	6.67	26.3	6.22	25.4	6.00	24.6	5.78	22.9	5.36
		7.0	6.0	29.6	6.72	27.9	6.30	26.3	5.88	25.4	5.68	24.6	5.47	22.9	5.08
		9.0	7.9	29.6	6.35	27.9	5.95	26.3	5.57	25.4	5.37	24.6	5.19	22.9	4.81
		11.0	9.8	29.6	6.01	27.9	5.64	26.3	5.27	25.4	5.09	24.6	4.92	22.9	4.57
		13.0	11.8	29.6	5.67	27.9	5.33	26.3	4.99	25.4	4.82	24.6	4.66	22.9	4.33
		15.0	13.7	29.6	5.38	27.9	5.05	26.3	4.74	25.4	4.58	24.6	4.43	22.9	4.12
60%	180 (20.10)	-19.8	-20.0	20.5	8.41	20.5	8.61	20.4	8.82	20.4	8.92	20.4	9.02	19.6	8.71
		-18.8	-19.0	20.9	8.47	20.8	8.67	20.8	8.88	20.8	8.98	20.8	9.08	19.6	8.52
		-16.7	-17.0	21.7	8.61	21.6	8.80	21.6	9.00	21.6	9.10	21.1	8.86	19.6	8.14
		-13.7	-15.0	22.6	8.75	22.5	8.94	22.5	9.12	21.8	8.77	21.1	8.43	19.6	7.75
		-11.8	-13.0	23.6	8.90	23.6	9.08	22.5	8.64	21.8	8.32	21.1	7.99	19.6	7.36
		-9.8	-11.0	24.7	9.05	23.9	8.80	22.5	8.18	21.8	7.87	21.1	7.57	19.6	6.97
		-9.5	-10.0	25.3	9.12	23.9	8.55	22.5	7.95	21.8	7.65	21.1	7.36	19.6	6.79
		-8.5	-9.1	25.4	8.93	23.9	8.33	22.5	7.74	21.8	7.46	21.1	7.17	19.6	6.62
		-7.0	-7.6	25.4	8.54	23.9	7.97	22.5	7.41	21.8	7.14	21.1	6.87	19.6	6.35
		-5.0	-5.6	25.4	8.04	23.9	7.51	22.5	6.99	21.8	6.74	21.1	6.49	19.6	6.00
		-3.0	-3.7	25.4	7.58	23.9	7.09	22.5	6.61	21.8	6.37	21.1	6.14	19.6	5.68
		0.0	-0.7	25.4	6.92	23.9	6.48	22.5	6.05	21.8	5.84	21.1	5.63	19.6	5.22
		3.0	2.2	25.4	6.34	23.9	5.95	22.5	5.56	21.8	5.37	21.1	5.18	19.6	4.81
		5.0	4.1	25.4	6.00	23.9	5.63	22.5	5.26	21.8	5.09	21.1	4.91	19.6	4.56
		7.0	6.0	25.4	5.67	23.9	5.33	22.5	4.99	21.8	4.82	21.1	4.66	19.6	4.33
		9.0	7.9	25.4	5.37	23.9	5.05	22.5	4.73	21.8	4.58	21.1	4.42	19.6	4.12
		11.0	9.8	25.4	5.09	23.9	4.79	22.5	4.49	21.8	4.35	21.1	4.20	19.6	3.92
		13.0	11.8	25.4	4.82	23.9	4.54	22.5	4.26	21.8	4.12	21.1	3.99	19.6	3.72
		15.0	13.7	25.4	4.58	23.9	4.31	22.5	4.05	21.8	3.93	21.1	3.80	19.6	3.55
50%	15 (16.75)	-19.8	-20.0	20.4	9.01	20.0	8.89	18.8	8.26	18.1	7.95	17.5	7.64	16.3	7.04
		-18.8	-19.0	20.8	9.06	20.0	8.70	18.8	8.09	18.1	7.78	17.5	7.48	16.3	6.90
		-16.7	-17.0	21.2	8.91	20.0	8.31	18.8	7.73	18.1	7.44	17.5	7.16	16.3	6.60
		-13.7	-15.0	21.2	8.48	20.0	7.91	18.8	7.36	18.1	7.09	17.5	6.82	16.3	6.30
		-11.8	-13.0	21.2	8.04	20.0	7.51	18.8	6.99	18.1	6.74	17.5	6.49	16.3	6.00
		-9.8	-11.0	21.2	7.61	20.0	7.11	18.8	6.63	18.1	6.39	17.5	6.16	16.3	5.70
		-9.5	-10.0	21.2	7.40	20.0	6.92	18.8	6.45	18.1	6.22	17.5	6.00	16.3	5.55
		-8.5	-9.1	21.2	7.21	20.0	6.75	18.8	6.30	18.1	6.07	17.5	5.85	16.3	5.42
		-7.0	-7.6	21.2	6.91	20.0	6.47	18.8	6.04	18.1	5.83	17.5	5.62	16.3	5.21
		-5.0	-5.6	21.2	6.52	20.0	6.11	18.8	5.71	18.1	5.51	17.5	5.32	16.3	4.93
		-3.0	-3.7	21.2	6.17	20.0	5.79	18.8	5.41	18.1	5.23	17.5	5.05	16.3	4.69
		0.0	-0.7	21.2	5.66	20.0	5.31	18.8	4.98	18.1	4.81	17.5	4.64	16.3	4.32
		3.0	2.2	21.2	5.21	20.0	4.90	18.8	4.59	18.1	4.44	17.5	4.29	16.3	4.00
		5.0	4.1	21.2	4.93	20.0	4.64	18.8	4.36	18.1	4.22	17.5	4.08	16.3	3.81
		7.0	6.0	21.2	4.68	20.0	4.41	18.8	4.14	18.1	4.01	17.5	3.88	16.3	3.62
		9.0	7.9	21.2	4.44	20.0	4.19	18.8	3.94	18.1	3.82	17.5	3.69	16.3	3.45
		11.0	9.8	21.2	4.22	20.0	3.99	18.8	3.75	18.1	3.64	17.5	3.52	16.3	3.29
		13.0	11.8	21.2	4.01	20.0	3.79	18.8	3.57	18.1	3.46	17.5	3.35	16.3	3.14
		15.0	13.7	21.2	3.82	20.0	3.61	18.8	3.40	18.1	3.30	17.5	3.20	16.3	3.00

4TW31482-2A

4 Capacity tables

4 - 3 Heating capacity tables

REYQ14P8

TC: Total Capacity: kW ; PI: Power Input: kW (compressor + outdoor fan motor)

Combination (%)	Capacity index (kW)	Outdoor air temp.		Indoor air temperature: °CDB											
				16.0		18.0		20.0		21.0		22.0		24.0	
				TC	PI	TC	PI	TC	PI	TC	PI	TC	PI	TC	PI
		°CDB	°CWB	kW	kW	kW	kW	kW	kW	kW	kW	kW	kW	kW	kW
130	260 (29.12)	-19.8	-20.0	27.0	6.23	26.9	6.78	26.8	7.34	26.8	7.61	26.7	7.89	26.6	8.44
		-18.8	-19.0	27.5	6.42	27.4	6.96	27.3	7.50	27.3	7.77	27.2	8.04	27.1	8.58
		-16.7	-17.0	28.6	6.79	28.5	7.31	28.4	7.83	28.3	8.09	28.3	8.35	28.2	8.87
		-13.7	-15.0	29.8	7.18	29.7	7.68	29.6	8.18	29.5	8.42	29.4	8.67	29.3	9.17
		-11.8	-13.0	31.1	7.57	31.0	8.04	30.8	8.52	30.8	8.76	30.7	9.00	30.6	9.47
		-9.8	-11.0	32.5	7.96	32.4	8.41	32.3	8.86	32.2	9.09	32.2	9.32	32.1	9.77
		-9.5	-10.0	33.2	8.15	33.1	8.59	33.0	9.03	33.0	9.26	32.9	9.48	32.8	9.92
		-8.5	-9.1	33.9	8.32	33.8	8.75	33.7	9.19	33.7	9.40	33.6	9.62	33.5	10.1
		-7.0	-7.6	35.2	8.60	35.1	9.02	34.9	9.44	34.9	9.64	34.8	9.85	34.7	10.3
		-5.0	-5.6	36.9	8.97	36.8	9.36	36.7	9.76	36.6	9.96	36.6	10.2	36.5	10.6
		-3.0	-3.7	38.7	9.30	38.5	9.68	38.4	10.1	38.4	10.2	38.3	10.4	38.2	10.8
		0.0	-0.7	41.7	9.81	41.6	10.2	41.4	10.5	41.4	10.7	41.3	10.9	41.2	11.2
		3.0	2.2	44.8	10.3	44.7	10.6	44.6	10.9	44.6	11.1	44.5	11.2	44.4	11.6
		5.0	4.1	47.0	10.5	46.9	10.8	46.8	11.2	46.8	11.3	46.7	11.5	46.6	11.8
		7.0	6.0	49.3	10.8	49.2	11.1	49.1	11.4	49.1	11.5	49.0	11.7	48.9	12.0
		9.0	7.9	51.7	11.1	51.6	11.3	51.5	11.6	51.5	11.8	51.4	11.9	51.0	12.0
		11.0	9.8	54.3	11.3	54.2	11.6	54.1	11.8	54.0	12.0	54.0	12.1	51.0	11.4
		13.0	11.8	57.0	11.5	56.9	11.8	56.8	12.0	56.6	12.1	54.7	11.6	51.0	10.7
		15.0	13.7	59.8	11.7	59.7	12.0	58.5	11.9	56.6	11.4	54.7	11.0	51.0	10.1
120	240 (26.88)	-19.8	-20.0	26.9	6.98	26.8	7.49	26.7	7.99	26.7	8.25	26.6	8.50	26.5	9.01
		-18.8	-19.0	27.4	7.15	27.3	7.65	27.2	8.14	27.1	8.39	27.1	8.64	27.0	9.14
		-16.7	-17.0	28.4	7.50	28.3	7.97	28.3	8.45	28.2	8.69	28.2	8.93	28.1	9.41
		-13.7	-15.0	29.6	7.85	29.5	8.31	29.4	8.77	29.4	9.00	29.3	9.23	29.2	9.69
		-11.8	-13.0	30.9	8.21	30.8	8.65	30.7	9.09	30.7	9.31	30.6	9.53	30.5	9.97
		-9.8	-11.0	32.3	8.57	32.2	8.99	32.1	9.41	32.1	9.62	32.0	9.83	32.0	10.2
		-9.5	-10.0	33.1	8.75	33.0	9.16	32.9	9.56	32.8	9.77	32.8	9.97	32.7	10.4
		-8.5	-9.1	33.8	8.91	33.7	9.31	33.6	9.71	33.6	9.91	33.5	10.1	33.4	10.5
		-7.0	-7.6	35.0	9.17	34.9	9.55	34.8	9.94	34.8	10.1	34.7	10.3	34.6	10.7
		-5.0	-5.6	36.8	9.50	36.7	9.87	36.6	10.2	36.5	10.4	36.5	10.6	36.4	11.0
		-3.0	-3.7	38.5	9.81	38.4	10.2	38.3	10.5	38.3	10.7	38.2	10.9	38.1	11.2
		0.0	-0.7	41.5	10.3	41.4	10.6	41.3	10.9	41.3	11.1	41.2	11.2	41.1	11.6
		3.0	2.2	44.7	10.7	44.6	11.0	44.5	11.3	44.4	11.4	44.4	11.6	44.3	11.9
		5.0	4.1	46.9	11.0	46.8	11.2	46.7	11.5	46.6	11.7	46.6	11.8	46.5	12.1
		7.0	6.0	49.2	11.2	49.1	11.5	49.0	11.7	48.9	11.9	48.9	12.0	47.1	11.6
		9.0	7.9	51.6	11.4	51.5	11.7	51.4	12.0	51.4	12.1	50.5	11.9	47.1	10.9
		11.0	9.8	54.1	11.7	54.0	11.9	53.9	12.1	52.3	11.7	50.5	11.2	47.1	10.3
		13.0	11.8	56.9	11.9	56.8	12.1	54.0	11.4	52.3	11.0	50.5	10.6	47.1	9.72
		15.0	13.7	59.7	12.1	57.5	11.6	54.0	10.8	52.3	10.4	50.5	9.98	47.1	9.19
110	220 (24.64)	-19.8	-20.0	26.8	7.72	26.7	8.19	26.6	8.65	26.5	8.89	26.5	9.12	26.4	9.59
		-18.8	-19.0	27.2	7.88	27.2	8.33	27.1	8.79	27.0	9.02	27.0	9.25	26.9	9.71
		-16.7	-17.0	28.3	8.20	28.2	8.64	28.1	9.08	28.1	9.30	28.0	9.52	28.0	9.95
		-13.7	-15.0	29.5	8.52	29.4	8.95	29.3	9.37	29.3	9.58	29.2	9.79	29.1	10.2
		-11.8	-13.0	30.8	8.85	30.7	9.26	30.6	9.66	30.6	9.86	30.5	10.1	30.4	10.5
		-9.8	-11.0	32.2	9.18	32.1	9.57	32.0	9.95	32.0	10.1	31.9	10.3	31.8	10.7
		-9.5	-10.0	32.9	9.35	32.9	9.72	32.8	10.1	32.7	10.3	32.7	10.5	32.6	10.8
		-8.5	-9.1	33.6	9.49	33.6	9.86	33.5	10.2	33.4	10.4	33.4	10.6	33.3	11.0
		-7.0	-7.6	34.9	9.73	34.8	10.1	34.7	10.4	34.7	10.6	34.6	10.8	34.5	11.1
		-5.0	-5.6	36.6	10.0	36.5	10.4	36.4	10.7	36.4	10.9	36.4	11.0	36.3	11.4
		-3.0	-3.7	38.4	10.3	38.3	10.6	38.2	11.0	38.2	11.1	38.1	11.3	38.0	11.6
		0.0	-0.7	41.4	10.8	41.3	11.0	41.2	11.3	41.2	11.5	41.1	11.6	41.0	11.9
		3.0	2.2	44.5	11.1	44.4	11.4	44.4	11.7	44.3	11.8	44.3	12.0	43.1	11.8
		5.0	4.1	46.7	11.4	46.6	11.6	46.6	11.9	46.5	12.0	46.3	12.1	43.1	11.1
		7.0	6.0	49.0	11.6	49.0	11.8	48.9	12.1	47.9	11.9	46.3	11.4	43.1	10.5
		9.0	7.9	51.5	11.8	51.4	12.0	49.5	11.6	47.9	11.2	46.3	10.7	43.1	9.87
		11.0	9.8	54.0	12.0	52.7	11.8	49.5	11.0	47.9	10.5	46.3	10.1	43.1	9.32
		13.0	11.8	55.9	11.9	52.7	11.1	49.5	10.3	47.9	9.92	46.3	9.54	43.1	8.79
		15.0	13.7	55.9	11.2	52.7	10.5	49.5	9.74	47.9	9.38	46.3	9.02	43.1	8.32
100	200 (22.40)	-19.8	-20.0	26.6	8.47	26.5	8.89	26.5	9.31	26.4	9.53	26.4	9.74	26.3	10.2
		-18.8	-19.0	27.1	8.61	27.0	9.02	26.9	9.44	26.9	9.65	26.9	9.85	26.8	10.3
		-16.7	-17.0	28.2	8.90	28.1	9.30	28.0	9.70	28.0	9.90	27.9	10.1	27.8	10.5
		-13.7	-15.0	29.3	9.20	29.3	9.58	29.2	9.96	29.1	10.2	29.1	10.3	29.0	10.7
		-11.8	-13.0	30.6	9.50	30.6	9.86	30.5	10.2	30.4	10.4	30.4	10.6	30.3	11.0
		-9.8	-11.0	32.1	9.80	32.0	10.1	31.9	10.5	31.9	10.7	31.8	10.8	31.7	11.2
		-9.5	-10.0	32.8	9.94	32.7	10.3	32.6	10.6	32.6	10.8	32.6	11.0	32.5	11.3
		-8.5	-9.1	33.5	10.1	33.4	10.4	33.4	10.7	33.3	10.9	33.3	11.1	33.2	11.4
		-7.0	-7.6	34.7	10.3	34.7	10.6	34.6	10.9	34.5	11.1	34.5	11.3	34.4	11.6
		-5.0	-5.6	36.5	10.6	36.4	10.9	36.3	11.2	36.3	11.3	36.2	11.5	36.2	11.8
		-3.0	-3.7	38.2	10.8	38.2	11.1	38.1	11.4	38.0	11.6	38.0	11.7	37.9	12.0
		0.0	-0.7	41.2	11.2	41.2	11.5	41.1	11.8	41.0	11.9	41.0	12.0	39.2	11.5
		3.0	2.2	44.4	11.6	44.3	11.8	44.2	12.1	43.6	11.9	42.1	11.4	39.2	10.5
		5.0	4.1	46.6	11.8	46.5	12.0	45.0	11.7	43.6	11.2	42.1	10.8	39.2	9.91
		7.0	6.0	48.9	12.0	47.9	11.9	45.0	11.0	43.6	10.6	42.1	10.2	39.2	9.36
		9.0	7.9	50.8	12.0	47.9	11.2	45.0	10.4	43.6	9.98	42.1	9.60	39.2	8.84
		11.0	9.8	50.8	11.3	47.9	10.5	45.0	9.79	43.6	9.43	42.1	9.07	39.2	8.36
		13.0	11.8	50.8	10.6	47.9	9.92	45.0	9.23	43.6	8.89	42.1	8.55	39.2	7.90
		15.0	13.7	50.8	10.0	47.9	9.37	45.0	8.73	43.6	8.41	42.1	8.10	39.2	7.49

4TW31482-2A

NOTES - ANMERKUNGEN - Σημειώσεις - NOTAS - REMARQUES - NOTE - OPMERKINGEN - примечания - NOTLAR

1 is shown as reference. When selecting the unit models, avoid the Outdoor air temperature range shown by .

dient als Verweis. Vermeiden Sie bei der Auswahl der Gerätemodelle den als markierten Temperaturbereich der Außenluft

Η είναι ενδεικτική. κατά την επιλογή των μοντέλων των μονάδων, αποφύγετε το εύρος θερμοκρασίας εξωτερικού αέρα που υποδεικνύεται

se muestra como referencia. Cuando seleccione los modelos de unidad, evite el intervalo de temperaturas del aire exterior indicado mediante

est montré comme référence.Lors du choix des modèles d'unités, évitez la plage de températures de l'air extérieur illustré par

valori riportati unicamente come riferimento. Nel selezionare i modelli delle unità, non considerare i valori di temperatura dell'aria esterna indicati con il colore

is als referentie getoond. Wanneer modellen van eenheden worden gekozen, vermijd dan het bereik van buitenluchttemperaturen geïllustreerd door

показан как. При выборе модели устройства избегайте внешнюю температуру воздуха, указанную в

referans olarak gösterilmektedir. Ünite modellerini seçerken, belirtilen Dış hava sıcaklığı aralığından kaçının

2 The above table shows the average value of conditions which may occur.

Die obige Tabelle zeigt den Durchschnittswert der Bedingungen, die auftreten können.

Στον παραπάνω πίνακα αναγράφεται η μέση τιμή για συνθήκες που μπορεί να προκύψουν.

La tabla de arriba muestra el valor medio de condiciones que pueden ocurrir.

Le tableau ci-dessus donne la valeur moyenne pour des conditions qui peuvent survenir.

La tabella in alto mostra il valore delle condizioni medie che si possono riscontrare.

De tabel hierboven geeft de gemiddelde waarde aan van situaties die kunnen voorvallen.

Таблица расположенная выше показывает среднее значение условий, которые могут наступить.

Yukarıdaki tablo meydana gelebilecek koşulların ortalama değerini göstermektedir.

4 Capacity tables

4 - 3 Heating capacity tables

REYQ14P8

TC: Total Capacity: kW ; PI: Power Input: kW (compressor + outdoor fan motor)

Combination (%)	Capacity index (kW)	Outdoor air temp.		Indoor air temperature: °CDB											
				16.0		18.0		20.0		21.0		22.0		24.0	
				TC	PI	TC	PI	TC	PI	TC	PI	TC	PI	TC	PI
		°CDB	°CWB	kW	kW	kW	kW	kW	kW	kW	kW	kW	kW	kW	kW
90%	315 (36.00)	-19.8	-20.0	26.5	9.21	26.4	9.59	26.3	9.97	26.3	10.2	26.3	10.4	26.2	10.7
		-18.8	-19.0	27.0	9.34	26.9	9.71	26.8	10.1	26.8	10.3	26.8	10.5	26.7	10.8
		-16.7	-17.0	28.0	9.60	28.0	9.96	27.9	10.3	27.8	10.5	27.8	10.7	27.7	11.0
		-13.7	-15.0	29.2	9.87	29.1	10.2	29.1	10.6	29.0	10.7	29.0	10.9	28.9	11.2
		-11.8	-13.0	30.5	10.1	30.4	10.5	30.4	10.8	30.3	11.0	30.3	11.1	30.2	11.5
		-9.8	-11.0	31.9	10.4	31.8	10.7	31.8	11.0	31.7	11.2	31.7	11.4	31.6	11.7
		-9.5	-10.0	32.7	10.5	32.6	10.8	32.5	11.2	32.5	11.3	32.5	11.5	32.4	11.8
		-8.5	-9.1	33.4	10.7	33.3	11.0	33.2	11.3	33.2	11.4	33.2	11.6	33.1	11.9
		-7.0	-7.6	34.6	10.9	34.5	11.1	34.5	11.4	34.4	11.6	34.4	11.7	34.3	12.0
		-5.0	-5.6	36.3	11.1	36.3	11.4	36.2	11.7	36.2	11.8	36.1	11.9	35.3	11.8
		-3.0	-3.7	38.1	11.3	38.0	11.6	38.0	11.9	37.9	12.0	37.9	12.1	35.3	11.1
		0.0	-0.7	41.1	11.7	41.0	11.9	40.5	12.0	39.2	11.5	37.9	11.0	35.3	10.2
		3.0	2.2	44.3	12.0	43.1	11.8	40.5	10.9	39.2	10.5	37.9	10.1	35.3	9.29
		5.0	4.1	45.7	11.9	43.1	11.1	40.5	10.3	39.2	9.91	37.9	9.53	35.3	8.78
		7.0	6.0	45.7	11.2	43.1	10.5	40.5	9.71	39.2	9.35	37.9	9.00	35.3	8.30
		9.0	7.9	45.7	10.6	43.1	9.86	40.5	9.17	39.2	8.84	37.9	8.51	35.3	7.85
		11.0	9.8	45.7	9.97	43.1	9.31	40.5	8.67	39.2	8.36	37.9	8.05	35.3	7.44
		13.0	11.8	45.7	9.39	43.1	8.78	40.5	8.19	39.2	7.89	37.9	7.60	35.3	7.04
		15.0	13.7	45.7	8.89	43.1	8.31	40.5	7.76	39.2	7.48	37.9	7.21	35.3	6.68
80%	280 (32.00)	-19.8	-20.0	26.3	9.95	26.3	10.3	26.2	10.6	26.2	10.8	26.2	11.0	26.1	11.3
		-18.8	-19.0	26.8	10.1	26.8	10.4	26.7	10.7	26.7	10.9	26.6	11.1	26.6	11.4
		-16.7	-17.0	27.9	10.3	27.8	10.6	27.8	10.9	27.7	11.1	27.7	11.3	27.6	11.6
		-13.7	-15.0	29.1	10.5	29.0	10.8	28.9	11.2	28.9	11.3	28.9	11.5	28.8	11.8
		-11.8	-13.0	30.4	10.8	30.3	11.1	30.2	11.4	30.2	11.5	30.2	11.7	30.1	12.0
		-9.8	-11.0	31.8	11.0	31.7	11.3	31.7	11.6	31.6	11.7	31.6	11.9	31.4	12.0
		-9.5	-10.0	32.5	11.1	32.5	11.4	32.4	11.7	32.4	11.8	32.3	12.0	31.4	11.7
		-8.5	-9.1	33.2	11.2	33.2	11.5	33.1	11.8	33.1	11.9	33.0	12.0	31.4	11.4
		-7.0	-7.6	34.5	11.4	34.4	11.7	34.3	11.9	34.3	12.1	33.7	11.9	31.4	10.9
		-5.0	-5.6	36.2	11.6	36.1	11.9	36.0	12.1	34.8	11.6	33.7	11.2	31.4	10.3
		-3.0	-3.7	38.0	11.9	37.9	12.1	36.0	11.4	34.8	11.0	33.7	10.5	31.4	9.69
		0.0	-0.7	40.6	12.0	38.3	11.2	36.0	10.4	34.8	10.0	33.7	9.61	31.4	8.86
		3.0	2.2	40.6	11.0	38.3	10.2	36.0	9.51	34.8	9.16	33.7	8.81	31.4	8.13
		5.0	4.1	40.6	10.3	38.3	9.65	36.0	8.98	34.8	8.65	33.7	8.33	31.4	7.69
		7.0	6.0	40.6	9.75	38.3	9.11	36.0	8.49	34.8	8.18	33.7	7.88	31.4	7.29
		9.0	7.9	40.6	9.21	38.3	8.61	36.0	8.03	34.8	7.74	33.7	7.46	31.4	6.91
		11.0	9.8	40.6	8.70	38.3	8.15	36.0	7.60	34.8	7.34	33.7	7.07	31.4	6.55
		13.0	11.8	40.6	8.21	38.3	7.70	36.0	7.19	34.8	6.94	33.7	6.69	31.4	6.21
		15.0	13.7	40.6	7.78	38.3	7.30	36.0	6.82	34.8	6.59	33.7	6.36	31.4	5.90
70%	245 (28.00)	-19.8	-20.0	26.2	10.7	26.1	11.0	26.1	11.3	26.1	11.4	26.0	11.6	26.0	11.9
		-18.8	-19.0	26.7	10.8	26.6	11.1	26.6	11.4	26.5	11.5	26.5	11.7	26.5	12.0
		-16.7	-17.0	27.7	11.0	27.7	11.3	27.6	11.6	27.6	11.7	27.6	11.8	27.5	12.1
		-13.7	-15.0	28.9	11.2	28.9	11.5	28.8	11.7	28.8	11.9	28.8	12.0	27.5	11.5
		-11.8	-13.0	30.2	11.4	30.2	11.7	30.1	11.9	30.1	12.1	29.5	11.8	27.5	10.9
		-9.8	-11.0	31.6	11.6	31.6	11.9	31.5	12.1	30.5	11.6	29.5	11.2	27.5	10.3
		-9.5	-10.0	32.4	11.7	32.3	12.0	31.5	11.8	30.5	11.3	29.5	10.9	27.5	9.98
		-8.5	-9.1	33.1	11.8	33.0	12.1	31.5	11.4	30.5	11.0	29.5	10.6	27.5	9.73
		-7.0	-7.6	34.3	12.0	33.5	11.8	31.5	10.9	30.5	10.5	29.5	10.1	27.5	9.32
		-5.0	-5.6	35.5	11.9	33.5	11.1	31.5	10.3	30.5	9.92	29.5	9.54	27.5	8.79
		-3.0	-3.7	35.5	11.2	33.5	10.5	31.5	9.74	30.5	9.37	29.5	9.02	27.5	8.32
		0.0	-0.7	35.5	10.2	33.5	9.56	31.5	8.90	30.5	8.57	29.5	8.25	27.5	7.63
		3.0	2.2	35.5	9.37	33.5	8.76	31.5	8.17	30.5	7.88	29.5	7.59	27.5	7.02
		5.0	4.1	35.5	8.85	33.5	8.28	31.5	7.73	30.5	7.45	29.5	7.19	27.5	6.66
		7.0	6.0	35.5	8.37	33.5	7.84	31.5	7.32	30.5	7.06	29.5	6.81	27.5	6.32
		9.0	7.9	35.5	7.92	33.5	7.42	31.5	6.94	30.5	6.70	29.5	6.46	27.5	6.00
		11.0	9.8	35.5	7.50	33.5	7.04	31.5	6.58	30.5	6.36	29.5	6.14	27.5	5.70
		13.0	11.8	35.5	7.09	33.5	6.66	31.5	6.23	30.5	6.03	29.5	5.82	27.5	5.41
		15.0	13.7	35.5	6.73	33.5	6.33	31.5	5.93	30.5	5.73	29.5	5.54	27.5	5.16
60%	210 (24.00)	-19.8	-20.0	26.1	11.4	26.0	11.7	26.0	12.0	25.9	12.1	25.3	11.7	23.5	10.8
		-18.8	-19.0	26.5	11.5	26.5	11.8	26.5	12.0	26.1	11.9	25.3	11.5	23.5	10.5
		-16.7	-17.0	27.6	11.7	27.6	11.9	27.0	11.8	26.1	11.4	25.3	10.9	23.5	10.0
		-13.7	-15.0	28.8	11.9	28.7	12.1	27.0	11.2	26.1	10.8	25.3	10.4	23.5	9.55
		-11.8	-13.0	30.1	12.1	28.7	11.5	27.0	10.6	26.1	10.2	25.3	9.84	23.5	9.07
		-9.8	-11.0	30.5	11.6	28.7	10.8	27.0	10.1	26.1	9.69	25.3	9.32	23.5	8.59
		-9.5	-10.0	30.5	11.3	28.7	10.5	27.0	9.79	26.1	9.42	25.3	9.06	23.5	8.36
		-8.5	-9.1	30.5	11.0	28.7	10.3	27.0	9.54	26.1	9.19	25.3	8.84	23.5	8.16
		-7.0	-7.6	30.5	10.5	28.7	9.82	27.0	9.14	26.1	8.80	25.3	8.47	23.5	7.82
		-5.0	-5.6	30.5	9.91	28.7	9.26	27.0	8.63	26.1	8.31	25.3	8.01	23.5	7.40
		-3.0	-3.7	30.5	9.37	28.7	8.76	27.0	8.16	26.1	7.87	25.3	7.58	23.5	7.02
		0.0	-0.7	30.5	8.57	28.7	8.02	27.0	7.49	26.1	7.23	25.3	6.97	23.5	6.46
		3.0	2.2	30.5	7.87	28.7	7.38	27.0	6.90	26.1	6.66	25.3	6.43	23.5	5.96
		5.0	4.1	30.5	7.45	28.7	6.99	27.0	6.54	26.1	6.32	25.3	6.10	23.5	5.67
		7.0	6.0	30.5	7.06	28.7	6.63	27.0	6.21	26.1	6.00	25.3	5.79	23.5	5.39
		9.0	7.9	30.5	6.69	28.7	6.29	27.0	5.90	26.1	5.70	25.3	5.51	23.5	5.13
		11.0	9.8	30.5	6.35	28.7	5.98	27.0	5.61	26.1	5.42	25.3	5.24	23.5	4.89
		13.0	11.8	30.5	6.02	28.7	5.67	27.0	5.32	26.1	5.15	25.3	4.98	23.5	4.65
		15.0	13.7	30.5	5.73	28.7	5.40	27.0	5.07	26.1	4.91	25.3	4.75	23.5	4.44
50%	175 (20.00)	-19.8	-20.0	25.4	11.8	23.9	11.0	22.5	10.2	21.8	9.83	21.1	9.45	19.6	8.71
		-18.8	-19.0	25.4	11.5	23.9	10.7	22.5	9.99	21.8	9.61	21.1	9.24	19.6	8.52
		-16.7	-17.0	25.4	11.0	23.9	10.2	22.5	9.53	21.8	9.18	21.1	8.83	19.6	8.15
		-13.7	-15.0	25.4	10.4	23.9	9.75	22.5	9.07	21.8	8.74	21.1	8.41	19.6	7.77
		-11.8	-13.0	25.4	9.90	23.9	9.25	22.5	8.61	21.8	8.30	21.1	7.99	19.6	7.39
		-9.8	-11.0	25.4	9.37	23.9	8.76	22.5	8.17	21.8	7.88	21.1	7.59	19.6	7.02
		-9.5	-10.0	25.4	9.12	23.9	8.53	22.5	7.95	21.8	7.67	21.1	7.39	19.6	6.84
		-8.5	-9.1	25.4	8.89	23.9	8.32	22.5	7.76	21.8	7.49	21.1	7.21	19.6	6.68
		-7.0	-7.6	25.4	8.52	23.9	7.98	22.5	7.45	21.8	7.19	21.1	6.93	19.6	6.42
		-5.0	-5.6	25.4	8.05	23.9	7.54	22.5	7.05	21.8	6.81	21.1	6.56	19.6	6.09
		-3.0	-3.7	25.4	7.63	23.9	7.15	22.5	6.69	21.8	6.46	21.1	6.24	19.6	5.79
		0.0	-0.7	25.4	7.00	23.9	6.58	22.5	6.16	21.8	5.96	21.1	5.75	19.6	5.35
		3.0	2.2	25.4	6.46	23.9	6.07	22.5	5.70	21.8	5.51	21.1	5.33	19.6	4.96
		5.0	4.1	25.4	6.13	23.9	5.77	22.5	5.42	21.8	5.24	21.1	5.07	19.6	4.73
		7.0	6.0	25.4	5.82	23.9	5.49	22.5	5.15	21.8	4.99	21.1	4.83	19.6	4.51
		9.0	7.9	25.4	5.54	23.9	5.22	22.5	4.91	21.8	4.76	21.1	4.60	19.6	4.30
		11.0	9.8	25.4	5.27	23.9	4.97	22.5	4.68	21.8	4.54	21.1	4.39	19.6	4.11
		13.0	11.8	25.4	5.01	23.9	4.73	22.5	4.46	21.8	4.32	21.1	4.19	19.6	3.92
		15.0	13.7	25.4	4.78	23.9	4.52	22.5	4.26	21.8	4.13	21.1	4.00	19.6	3.75

4TW31482-2A

4 Capacity tables

4 - 3 Heating capacity tables

REYQ16P8

TC: Total Capacity: kW ; PI: Power Input: kW (compressor + outdoor fan motor)

Combination (%)	Capacity index (kW)	Outdoor air temp.		Indoor air temperature: °CDB											
				16.0		18.0		20.0		21.0		22.0		24.0	
				TC	PI	TC	PI	TC	PI	TC	PI	TC	PI	TC	PI
		°CDB	°CWB	kW	kW	kW	kW	kW	kW	kW	kW	kW	kW	kW	kW
130	520 (58.50)	-19.8	-20.0	31.3	8.42	31.2	9.07	31.0	9.72	31.0	10.0	30.9	10.4	30.8	11.0
		-18.8	-19.0	31.9	8.64	31.7	9.28	31.6	9.91	31.6	10.2	31.5	10.6	31.4	11.2
		-16.7	-17.0	33.1	9.10	33.0	9.71	32.9	10.3	32.8	10.6	32.8	10.9	32.7	11.5
		-13.7	-15.0	34.5	9.56	34.4	10.1	34.3	10.7	34.2	11.0	34.2	11.3	34.1	11.9
		-11.8	-13.0	36.1	10.0	36.0	10.6	35.8	11.1	35.8	11.4	35.7	11.7	35.6	12.3
		-9.8	-11.0	37.8	10.5	37.6	11.0	37.5	11.6	37.5	11.8	37.4	12.1	37.3	12.6
		-9.5	-10.0	38.7	10.7	38.5	11.2	38.4	11.8	38.4	12.0	38.3	12.3	38.2	12.8
		-8.5	-9.1	39.5	10.9	39.4	11.4	39.3	11.9	39.2	12.2	39.2	12.5	39.0	13.0
		-7.0	-7.6	41.0	11.3	40.8	11.8	40.7	12.2	40.7	12.5	40.6	12.7	40.5	13.2
		-5.0	-5.6	43.0	11.7	42.9	12.2	42.8	12.6	42.8	12.9	42.7	13.1	42.6	13.6
		-3.0	-3.7	45.1	12.1	45.0	12.5	44.9	13.0	44.9	13.2	44.8	13.4	44.7	13.9
		0.0	-0.7	48.7	12.7	48.6	13.1	48.5	13.5	48.4	13.7	48.4	13.9	48.3	14.3
		3.0	2.2	52.5	13.2	52.4	13.6	52.3	14.0	52.2	14.2	52.1	14.4	52.0	14.8
		5.0	4.1	55.1	13.6	55.0	13.9	54.9	14.3	54.8	14.5	54.8	14.7	54.7	15.0
		7.0	6.0	57.9	13.9	57.8	14.2	57.6	14.6	57.6	14.7	57.5	14.9	56.6	14.9
		9.0	7.9	60.8	14.2	60.6	14.5	60.5	14.8	60.5	15.0	60.4	15.2	56.6	14.0
		11.0	9.8	63.8	14.5	63.7	14.8	63.5	15.1	62.9	15.0	60.8	14.4	56.6	13.2
		13.0	11.8	67.1	14.7	67.0	15.0	65.0	14.7	62.9	14.1	60.8	13.5	56.6	12.4
		15.0	13.7	70.4	15.0	69.2	14.9	65.0	13.8	62.9	13.3	60.8	12.7	56.6	11.7
120	480 (54.00)	-19.8	-20.0	31.1	9.30	31.0	9.90	30.9	10.5	30.9	10.8	30.8	11.1	30.7	11.7
		-18.8	-19.0	31.7	9.50	31.6	10.1	31.5	10.7	31.4	11.0	31.4	11.3	31.3	11.9
		-16.7	-17.0	33.0	9.92	32.9	10.5	32.8	11.1	32.7	11.3	32.6	11.6	32.5	12.2
		-13.7	-15.0	34.4	10.4	34.3	10.9	34.2	11.4	34.1	11.7	34.1	12.0	33.9	12.5
		-11.8	-13.0	35.9	10.8	35.8	11.3	35.7	11.8	35.7	12.1	35.6	12.3	35.5	12.8
		-9.8	-11.0	37.6	11.2	37.5	11.7	37.4	12.2	37.3	12.4	37.3	12.7	37.2	13.2
		-9.5	-10.0	38.5	11.4	38.4	11.9	38.3	12.4	38.2	12.6	38.2	12.9	38.1	13.3
		-8.5	-9.1	39.3	11.6	39.2	12.1	39.1	12.6	39.1	12.8	39.0	13.0	38.9	13.5
		-7.0	-7.6	40.8	11.9	40.7	12.4	40.6	12.8	40.5	13.1	40.5	13.3	40.4	13.7
		-5.0	-5.6	42.9	12.3	42.8	12.8	42.7	13.2	42.6	13.4	42.6	13.6	42.5	14.0
		-3.0	-3.7	45.0	12.7	44.9	13.1	44.8	13.5	44.7	13.7	44.7	13.9	44.6	14.3
		0.0	-0.7	48.6	13.3	48.5	13.6	48.4	14.0	48.3	14.2	48.2	14.4	48.1	14.8
		3.0	2.2	52.3	13.8	52.2	14.1	52.1	14.5	52.1	14.6	52.0	14.8	51.9	15.1
		5.0	4.1	55.0	14.1	54.9	14.4	54.8	14.7	54.7	14.9	54.6	15.1	52.3	14.4
		7.0	6.0	57.7	14.4	57.6	14.7	57.5	15.0	57.5	15.1	56.1	14.8	52.3	13.5
		9.0	7.9	60.6	14.6	60.5	14.9	60.0	15.1	58.1	14.5	56.1	13.9	52.3	12.7
		11.0	9.8	63.6	14.9	63.5	15.2	60.0	14.2	58.1	13.6	56.1	13.1	52.3	12.0
		13.0	11.8	66.9	15.1	63.9	14.4	60.0	13.3	58.1	12.8	56.1	12.3	52.3	11.3
		15.0	13.7	67.7	14.5	63.9	13.5	60.0	12.5	58.1	12.1	56.1	11.6	52.3	10.7
110	440 (49.50)	-19.8	-20.0	31.0	10.2	30.9	10.7	30.8	11.3	30.7	11.5	30.7	11.8	30.6	12.4
		-18.8	-19.0	31.5	10.4	31.5	10.9	31.4	11.4	31.3	11.7	31.3	12.0	31.2	12.5
		-16.7	-17.0	32.8	10.7	32.7	11.3	32.6	11.8	32.6	12.0	32.5	12.3	32.4	12.8
		-13.7	-15.0	34.2	11.1	34.1	11.6	34.0	12.1	34.0	12.4	33.9	12.6	33.8	13.1
		-11.8	-13.0	35.8	11.5	35.7	12.0	35.6	12.5	35.5	12.7	35.5	13.0	35.4	13.4
		-9.8	-11.0	37.5	11.9	37.4	12.4	37.3	12.8	37.2	13.1	37.2	13.3	37.1	13.7
		-9.5	-10.0	38.4	12.1	38.3	12.6	38.2	13.0	38.1	13.2	38.1	13.4	38.0	13.9
		-8.5	-9.1	39.2	12.3	39.1	12.7	39.0	13.2	39.0	13.4	38.9	13.6	38.8	14.0
		-7.0	-7.6	40.7	12.6	40.6	13.0	40.5	13.4	40.4	13.6	40.4	13.8	40.3	14.2
		-5.0	-5.6	42.7	13.0	42.6	13.4	42.5	13.7	42.5	13.9	42.4	14.1	42.3	14.5
		-3.0	-3.7	44.8	13.3	44.7	13.7	44.6	14.0	44.6	14.2	44.5	14.4	44.4	14.8
		0.0	-0.7	48.4	13.8	48.3	14.2	48.2	14.5	48.2	14.7	48.1	14.8	47.9	15.1
		3.0	2.2	52.2	14.3	52.1	14.6	52.0	14.9	51.9	15.1	51.5	15.0	47.9	13.8
		5.0	4.1	54.8	14.5	54.7	14.8	54.6	15.2	53.2	14.7	51.5	14.1	47.9	13.0
		7.0	6.0	57.6	14.8	57.5	15.1	55.0	14.4	53.2	13.8	51.5	13.3	47.9	12.2
		9.0	7.9	60.5	15.1	58.5	14.6	55.0	13.5	53.2	13.0	51.5	12.5	47.9	11.5
		11.0	9.8	62.1	14.8	58.5	13.8	55.0	12.8	53.2	12.3	51.5	11.8	47.9	10.8
		13.0	11.8	62.1	13.9	58.5	12.9	55.0	12.0	53.2	11.5	51.5	11.1	47.9	10.2
		15.0	13.7	62.1	13.1	58.5	12.2	55.0	11.3	53.2	10.9	51.5	10.5	47.9	9.67
100	400 (45.00)	-19.8	-20.0	30.8	11.1	30.7	11.5	30.6	12.0	30.6	12.3	30.6	12.5	30.5	13.0
		-18.8	-19.0	31.4	11.2	31.3	11.7	31.2	12.2	31.2	12.4	31.1	12.7	31.0	13.2
		-16.7	-17.0	32.7	11.6	32.6	12.0	32.5	12.5	32.4	12.7	32.4	13.0	32.3	13.5
		-13.7	-15.0	34.1	11.9	34.0	12.4	33.9	12.8	33.8	13.1	33.8	13.3	33.7	13.7
		-11.8	-13.0	35.6	12.3	35.5	12.7	35.4	13.2	35.4	13.4	35.3	13.6	35.3	14.0
		-9.8	-11.0	37.3	12.7	37.2	13.1	37.1	13.5	37.1	13.7	37.0	13.9	36.9	14.3
		-9.5	-10.0	38.2	12.8	38.1	13.2	38.0	13.6	38.0	13.8	37.9	14.0	37.8	14.4
		-8.5	-9.1	39.0	13.0	38.9	13.4	38.9	13.8	38.8	14.0	38.8	14.2	38.7	14.6
		-7.0	-7.6	40.5	13.3	40.4	13.6	40.3	14.0	40.3	14.2	40.2	14.4	40.1	14.8
		-5.0	-5.6	42.6	13.6	42.5	13.9	42.4	14.3	42.4	14.5	42.3	14.7	42.2	15.0
		-3.0	-3.7	44.7	13.9	44.6	14.2	44.5	14.6	44.5	14.7	44.4	14.9	43.6	14.8
		0.0	-0.7	48.3	14.4	48.2	14.7	48.1	15.0	48.0	15.1	46.8	14.7	43.6	13.5
		3.0	2.2	52.0	14.8	51.9	15.1	50.0	14.5	48.4	13.9	46.8	13.4	43.6	12.3
		5.0	4.1	54.7	15.0	53.2	14.7	50.0	13.6	48.4	13.1	46.8	12.6	43.6	11.6
		7.0	6.0	56.4	14.9	53.2	13.8	50.0	12.8	48.4	12.3	46.8	11.9	43.6	10.9
		9.0	7.9	56.4	14.0	53.2	13.0	50.0	12.1	48.4	11.6	46.8	11.2	43.6	10.3
		11.0	9.8	56.4	13.2	53.2	12.3	50.0	11.4	48.4	11.0	46.8	10.5	43.6	9.73
		13.0	11.8	56.4	12.4	53.2	11.5	50.0	10.7	48.4	10.3	46.8	9.94	43.6	9.18
		15.0	13.7	56.4	11.7	53.2	10.9	50.0	10.1	48.4	9.77	46.8	9.41	43.6	8.69

4TW31482-2A

NOTES - ANMERKUNGEN - Σημειώσεις - NOTAS - REMARQUES - NOTE - OPMERKINGEN - примечания - NOTLAR

1 is shown as reference. When selecting the unit models, avoid the Outdoor air temperature range shown by .

dient als Verweis. Vermeiden Sie bei der Auswahl der Gerätemodelle den als markierten Temperaturbereich der Außenluft

Η είναι ενδεικτική. κατά την επιλογή των μοντέλων των μονάδων, αποφύγετε το εύρος θερμοκρασίας εξωτερικού αέρα που υποδεικνύεται

se muestra como referencia. Cuando seleccione los modelos de unidad, evite el intervalo de temperaturas del aire exterior indicado mediante

est montré comme référence.Lors du choix des modèles d'unités, évitez la plage de températures de l'air extérieur illustré par

valori riportati unicamente come riferimento. Nel selezionare i modelli delle unità, non considerare i valori di temperatura dell'aria esterna indicati con il colore

is als referentie getoond. Wanneer modellen van eenheden worden gekozen, vermijd dan het bereik van buitenluchttemperaturen geïllustreerd door

показан как. При выборе модели устройства избегайте внешнюю температуру воздуха, указанную в

referans olarak gösterilmektedir. Ünite modellerini seçerken, belirtilen Dış hava sıcaklığı aralığından kaçının

2 The above table shows the average value of conditions which may occur.

Die obige Tabelle zeigt den Durchschnittswert der Bedingungen, die auftreten können.

Στον παραπάνω πίνακα αναγράφεται η μέση τιμή για συνθήκες που μπορεί να προκύψουν.

La tabla de arriba muestra el valor medio de condiciones que pueden ocurrir.

Le tableau ci-dessus donne la valeur moyenne pour des conditions qui peuvent survenir.

La tabella in alto mostra il valore delle condizioni medie che si possono riscontrare.

De tabel hierboven geeft de gemiddelde waarde aan van situaties die kunnen voorvallen.

Таблица расположенная выше показывает среднее значение условий, которые могут наступить.

Yukarıdaki tablo meydana gelebilecek koşulların ortalama değerini göstermektedir.

4 Capacity tables

4 - 3 Heating capacity tables

REYQ16P8

TC: Total Capacity: kW ; PI: Power Input: kW (compressor + outdoor fan motor)

Combination (%)	Capacity index (kW)	Outdoor air temp.		Indoor air temperature: °CDB											
				16.0		18.0		20.0		21.0		22.0		24.0	
				TC	PI	TC	PI	TC	PI	TC	PI	TC	PI	TC	PI
		°CDB	°CWB	kW	kW	kW	kW	kW	kW	kW	kW	kW	kW	kW	kW
90%	360 (40.50)	-19.8	-20.0	30.7	11.9	30.6	12.4	30.5	12.8	30.5	13.1	30.4	13.3	30.3	13.7
		-18.8	-19.0	31.2	12.1	31.2	12.5	31.1	13.0	31.0	13.2	31.0	13.4	30.9	13.8
		-16.7	-17.0	32.5	12.4	32.4	12.8	32.3	13.2	32.3	13.5	32.3	13.7	32.2	14.1
		-13.7	-15.0	33.9	12.7	33.8	13.1	33.7	13.5	33.7	13.7	33.7	13.9	33.6	14.3
		-11.8	-13.0	35.5	13.0	35.4	13.4	35.3	13.8	35.3	14.0	35.2	14.2	35.1	14.6
		-9.8	-11.0	37.1	13.4	37.1	13.7	37.0	14.1	36.9	14.3	36.9	14.5	36.8	14.8
		-9.5	-10.0	38.0	13.5	38.0	13.9	37.9	14.3	37.8	14.4	37.8	14.6	37.7	15.0
		-8.5	-9.1	38.9	13.7	38.8	14.0	38.7	14.4	38.7	14.6	38.6	14.7	38.6	15.1
		-7.0	-7.6	40.3	13.9	40.3	14.2	40.2	14.6	40.1	14.8	40.1	14.9	39.2	14.8
		-5.0	-5.6	42.4	14.2	42.3	14.5	42.3	14.9	42.2	15.0	42.1	15.1	39.2	13.9
		-3.0	-3.7	44.5	14.5	44.4	14.8	44.4	15.1	43.6	14.8	42.1	14.2	39.2	13.1
		0.0	-0.7	48.1	14.9	47.9	15.1	45.0	14.0	43.6	13.5	42.1	12.9	39.2	11.9
		3.0	2.2	50.8	14.8	47.9	13.8	45.0	12.8	43.6	12.3	42.1	11.8	39.2	10.9
		5.0	4.1	50.8	13.9	47.9	12.9	45.0	12.0	43.6	11.6	42.1	11.1	39.2	10.2
		7.0	6.0	50.8	13.1	47.9	12.2	45.0	11.3	43.6	10.9	42.1	10.5	39.2	9.67
		9.0	7.9	50.8	12.3	47.9	11.5	45.0	10.7	43.6	10.3	42.1	9.90	39.2	9.14
		11.0	9.8	50.8	11.6	47.9	10.8	45.0	10.1	43.6	9.72	42.1	9.36	39.2	8.65
		13.0	11.8	50.8	10.9	47.9	10.2	45.0	9.51	43.6	9.17	42.1	8.83	39.2	8.17
		15.0	13.7	50.8	10.3	47.9	9.66	45.0	9.01	43.6	8.69	42.1	8.37	39.2	7.75
80%	320 (36.00)	-19.8	-20.0	30.5	12.8	30.4	13.2	30.4	13.6	30.3	13.8	30.3	14.0	30.2	14.4
		-18.8	-19.0	31.1	12.9	31.0	13.3	30.9	13.7	30.9	13.9	30.9	14.1	30.8	14.5
		-16.7	-17.0	32.3	13.2	32.3	13.6	32.2	14.0	32.2	14.2	32.1	14.4	32.1	14.7
		-13.7	-15.0	33.8	13.5	33.7	13.9	33.6	14.2	33.6	14.4	33.5	14.6	33.5	15.0
		-11.8	-13.0	35.3	13.8	35.2	14.1	35.2	14.5	35.1	14.7	35.1	14.8	34.9	15.1
		-9.8	-11.0	37.0	14.1	36.9	14.4	36.9	14.7	36.8	14.9	36.8	15.1	34.9	14.2
		-9.5	-10.0	37.9	14.2	37.8	14.6	37.7	14.9	37.7	15.0	37.4	15.0	34.9	13.8
		-8.5	-9.1	38.7	14.4	38.7	14.7	38.6	15.0	38.6	15.1	37.4	14.6	34.9	13.4
		-7.0	-7.6	40.2	14.6	40.1	14.9	40.0	15.1	38.7	14.5	37.4	14.0	34.9	12.8
		-5.0	-5.6	42.3	14.8	42.2	15.1	40.0	14.2	38.7	13.7	37.4	13.1	34.9	12.0
		-3.0	-3.7	44.4	15.1	42.6	14.4	40.0	13.4	38.7	12.9	37.4	12.3	34.9	11.4
		0.0	-0.7	45.1	14.1	42.6	13.1	40.0	12.2	38.7	11.7	37.4	11.2	34.9	10.4
		3.0	2.2	45.1	12.8	42.6	11.9	40.0	11.1	38.7	10.7	37.4	10.3	34.9	9.49
		5.0	4.1	45.1	12.1	42.6	11.3	40.0	10.5	38.7	10.1	37.4	9.71	34.9	8.97
		7.0	6.0	45.1	11.4	42.6	10.6	40.0	9.89	38.7	9.53	37.4	9.18	34.9	8.48
		9.0	7.9	45.1	10.7	42.6	10.0	40.0	9.34	38.7	9.01	37.4	8.68	34.9	8.03
		11.0	9.8	45.1	10.1	42.6	9.47	40.0	8.84	38.7	8.53	37.4	8.22	34.9	7.62
		13.0	11.8	45.1	9.55	42.6	8.94	40.0	8.35	38.7	8.06	37.4	7.77	34.9	7.21
		15.0	13.7	45.1	9.04	42.6	8.47	40.0	7.92	38.7	7.65	37.4	7.38	34.9	6.85
70%	280 (320)	-19.8	-20.0	30.4	13.7	30.3	14.0	30.2	14.4	30.2	14.6	30.2	14.7	30.1	15.1
		-18.8	-19.0	30.9	13.8	30.9	14.1	30.8	14.5	30.8	14.7	30.7	14.8	30.5	15.0
		-16.7	-17.0	32.2	14.0	32.1	14.4	32.1	14.7	32.0	14.9	32.0	15.0	30.5	14.3
		-13.7	-15.0	33.6	14.3	33.5	14.6	33.5	14.9	33.4	15.1	32.8	14.8	30.5	13.5
		-11.8	-13.0	35.1	14.6	35.1	14.9	35.0	15.1	33.9	14.5	32.8	14.0	30.5	12.8
		-9.8	-11.0	36.8	14.8	36.8	15.1	35.0	14.3	33.9	13.7	32.8	13.2	30.5	12.1
		-9.5	-10.0	37.7	14.9	37.3	14.9	35.0	13.8	33.9	13.3	32.8	12.8	30.5	11.7
		-8.5	-9.1	38.6	15.0	37.3	14.5	35.0	13.5	33.9	12.9	32.8	12.4	30.5	11.4
		-7.0	-7.6	39.5	14.9	37.3	13.9	35.0	12.9	33.9	12.4	32.8	11.9	30.5	10.9
		-5.0	-5.6	39.5	14.0	37.3	13.0	35.0	12.1	33.9	11.6	32.8	11.2	30.5	10.3
		-3.0	-3.7	39.5	13.2	37.3	12.3	35.0	11.4	33.9	11.0	32.8	10.6	30.5	9.74
		0.0	-0.7	39.5	12.0	37.3	11.2	35.0	10.4	33.9	10.0	32.8	9.65	30.5	8.91
		3.0	2.2	39.5	10.9	37.3	10.2	35.0	9.53	33.9	9.19	32.8	8.85	30.5	8.19
		5.0	4.1	39.5	10.3	37.3	9.66	35.0	9.01	33.9	8.69	32.8	8.37	30.5	7.75
		7.0	6.0	39.5	9.75	37.3	9.13	35.0	8.52	33.9	8.22	32.8	7.93	30.5	7.35
		9.0	7.9	39.5	9.21	37.3	8.63	35.0	8.07	33.9	7.79	32.8	7.51	30.5	6.97
		11.0	9.8	39.5	8.72	37.3	8.18	35.0	7.65	33.9	7.39	32.8	7.13	30.5	6.62
		13.0	11.8	39.5	8.24	37.3	7.73	35.0	7.24	33.9	7.00	32.8	6.75	30.5	6.28
		15.0	13.7	39.5	7.81	37.3	7.34	35.0	6.88	33.9	6.65	32.8	6.42	30.5	5.98
60%	240 (27.00)	-19.8	-20.0	30.2	14.6	30.1	14.9	30.0	15.1	29.0	14.5	28.1	13.9	26.1	12.8
		-18.8	-19.0	30.8	14.7	30.7	15.0	30.0	14.7	29.0	14.1	28.1	13.6	26.1	12.5
		-16.7	-17.0	32.0	14.9	31.9	15.1	30.0	14.0	29.0	13.5	28.1	12.9	26.1	11.9
		-13.7	-15.0	33.4	15.1	31.9	14.3	30.0	13.3	29.0	12.8	28.1	12.3	26.1	11.3
		-11.8	-13.0	33.9	14.5	31.9	13.5	30.0	12.6	29.0	12.1	28.1	11.6	26.1	10.7
		-9.8	-11.0	33.9	13.7	31.9	12.8	30.0	11.9	29.0	11.4	28.1	11.0	26.1	10.1
		-9.5	-10.0	33.9	13.3	31.9	12.4	30.0	11.5	29.0	11.1	28.1	10.7	26.1	9.83
		-8.5	-9.1	33.9	12.9	31.9	12.1	30.0	11.2	29.0	10.8	28.1	10.4	26.1	9.58
		-7.0	-7.6	33.9	12.4	31.9	11.5	30.0	10.7	29.0	10.3	28.1	9.94	26.1	9.18
		-5.0	-5.6	33.9	11.6	31.9	10.9	30.0	10.1	29.0	9.74	28.1	9.38	26.1	8.67
		-3.0	-3.7	33.9	11.0	31.9	10.3	30.0	9.56	29.0	9.21	28.1	8.87	26.1	8.21
		0.0	-0.7	33.9	10.0	31.9	9.37	30.0	8.75	29.0	8.44	28.1	8.14	26.1	7.54
		3.0	2.2	33.9	9.18	31.9	8.61	30.0	8.04	29.0	7.76	28.1	7.49	26.1	6.95
		5.0	4.1	33.9	8.68	31.9	8.14	30.0	7.62	29.0	7.36	28.1	7.10	26.1	6.60
		7.0	6.0	33.9	8.22	31.9	7.71	30.0	7.22	29.0	6.98	28.1	6.74	26.1	6.27
		9.0	7.9	33.9	7.78	31.9	7.31	30.0	6.85	29.0	6.63	28.1	6.40	26.1	5.96
		11.0	9.8	33.9	7.38	31.9	6.94	30.0	6.51	29.0	6.30	28.1	6.09	26.1	5.67
		13.0	11.8	33.9	6.99	31.9	6.58	30.0	6.18	29.0	5.98	28.1	5.78	26.1	5.39
		15.0	13.7	33.9	6.65	31.9	6.26	30.0	5.88	29.0	5.70	28.1	5.51	26.1	5.15
50%	200 (22.50)	-19.8	-20.0	28.2	14.0	26.6	13.0	25.0	12.1	24.2	11.6	23.4	11.2	21.8	10.3
		-18.8	-19.0	28.2	13.7	26.6	12.7	25.0	11.8	24.2	11.4	23.4	10.9	21.8	10.1
		-16.7	-17.0	28.2	13.0	26.6	12.1	25.0	11.3	24.2	10.8	23.4	10.4	21.8	9.61
		-13.7	-15.0	28.2	12.3	26.6	11.5	25.0	10.7	24.2	10.3	23.4	9.91	21.8	9.15
		-11.8	-13.0	28.2	11.7	26.6	10.9	25.0	10.1	24.2	9.78	23.4	9.41	21.8	8.70
		-9.8	-11.0	28.2	11.0	26.6	10.3	25.0	9.60	24.2	9.26	23.4	8.92	21.8	8.25
		-9.5	-10.0	28.2	10.7	26.6	10.0	25.0	9.34	24.2	9.01	23.4	8.68	21.8	8.03
		-8.5	-9.1	28.2	10.4	26.6	9.77	25.0	9.11	24.2	8.79	23.4	8.47	21.8	7.84
		-7.0	-7.6	28.2	10.00	26.6	9.36	25.0	8.73	24.2	8.43	23.4	8.12	21.8	7.53
		-5.0	-5.6	28.2	9.43	26.6	8.84	25.0	8.25	24.2	7.97	23.4	7.68	21.8	7.13
		-3.0	-3.7	28.2	8.92	26.6	8.37	25.0	7.82	24.2	7.55	23.4	7.29	21.8	6.77
		0.0	-0.7	28.2	8.18	26.6	7.68	25.0	7.19	24.2	6.95	23.4	6.71	21.8	6.24
		3.0	2.2	28.2	7.53	26.6	7.08	25.0	6.64	24.2	6.42	23.4	6.20	21.8	5.78
		5.0	4.1	28.2	7.14	26.6	6.72	25.0	6.30	24.2	6.10	23.4	5.90	21.8	5.50
		7.0	6.0	28.2	6.77	26.6	6.38	25.0	5.99	24.2	5.80	23.4	5.61	21.8	5.24
		9.0	7.9	28.2	6.43	26.6	6.07	25.0	5.70	24.2	5.52	23.4	5.34	21.8	4.99
		11.0	9.8	28.2	6.12	26.6	5.77	25.0	5.43	24.2	5.26	23.4	5.10	21.8	4.77
		13.0	11.8	28.2	5.81	26.6	5.49	25.0	5.17	24.2	5.01	23.4	4.85	21.8	4.54
		15.0	13.7	28.2	5.54	26.6	5.23	25.0	4.93	24.2	4.78	23.4	4.64	21.8	4.35

4TW31482-2A

4 Capacity tables

4 - 3 Heating capacity tables

REYQ18P9

TC: Total Capacity: kW ; PI: Power Input: kW (compressor + outdoor fan motor)

Combination (%)	Capacity index (kW)	Outdoor air temp.		Indoor air temperature: °CDB											
				16.0		18.0		20.0		21.0		22.0		24.0	
				TC	PI	TC	PI	TC	PI	TC	PI	TC	PI	TC	PI
		°CDB	°CWB	kW	kW	kW	kW	kW	kW	kW	kW	kW	kW	kW	kW
130	585 (65.52)	-19.8	-20.0	36.6	9.29	36.5	9.95	36.3	10.6	36.3	10.9	36.2	11.3	36.1	11.9
		-18.8	-19.0	37.4	9.57	37.3	10.2	37.2	10.9	37.1	11.2	37.0	11.5	36.9	12.1
		-16.7	-17.0	39.2	10.1	39.0	10.7	38.9	11.3	38.9	11.6	38.8	11.9	38.7	12.6
		-13.7	-15.0	41.0	10.6	40.9	11.2	40.8	11.8	40.7	12.1	40.6	12.4	40.5	13.0
		-11.8	-13.0	42.9	11.1	42.8	11.7	42.7	12.2	42.6	12.5	42.6	12.8	42.4	13.4
		-9.8	-11.0	45.0	11.6	44.9	12.1	44.7	12.7	44.7	12.9	44.6	13.2	44.5	13.7
		-9.5	-10.0	46.0	11.8	45.9	12.3	45.8	12.9	45.7	13.1	45.6	13.4	45.5	13.9
		-8.5	-9.1	47.0	12.0	46.9	12.5	46.7	13.0	46.7	13.3	46.6	13.6	46.5	14.1
		-7.0	-7.6	48.7	12.4	48.5	12.8	48.4	13.3	48.3	13.6	48.3	13.8	48.1	14.3
		-5.0	-5.6	50.9	12.8	50.8	13.2	50.7	13.7	50.6	13.9	50.6	14.2	50.4	14.6
		-3.0	-3.7	53.2	13.1	53.1	13.6	53.0	14.0	52.9	14.3	52.8	14.5	52.7	14.9
		0.0	-0.7	57.0	13.7	56.8	14.1	56.7	14.5	56.6	14.7	56.6	14.9	56.5	15.4
		3.0	2.2	60.8	14.2	60.7	14.6	60.6	15.0	60.5	15.2	60.4	15.4	60.3	15.8
		5.0	4.1	63.4	14.5	63.3	14.9	63.2	15.2	63.1	15.4	63.0	15.6	62.9	16.0
		7.0	6.0	66.1	14.8	66.0	15.1	65.9	15.5	65.8	15.7	65.8	15.9	64.0	15.6
		9.0	7.9	68.9	15.1	68.8	15.4	68.7	15.7	68.6	15.9	68.6	16.1	64.0	14.8
		11.0	9.8	71.8	15.3	71.7	15.7	71.6	16.0	71.1	16.0	68.7	15.3	64.0	14.1
		13.0	11.8	75.0	15.6	74.8	15.9	73.5	15.8	71.1	15.2	68.7	14.6	64.0	13.4
		15.0	13.7	78.0	15.8	77.9	16.1	73.5	15.0	71.1	14.4	68.7	13.9	64.0	12.7
120	540 (60.48)	-19.8	-20.0	36.4	10.2	36.3	10.8	36.2	11.4	36.1	11.7	36.1	12.0	35.9	12.6
		-18.8	-19.0	37.3	10.4	37.1	11.0	37.0	11.6	37.0	11.9	36.9	12.2	36.8	12.8
		-16.7	-17.0	39.0	10.9	38.9	11.5	38.8	12.1	38.7	12.4	38.6	12.6	38.5	13.2
		-13.7	-15.0	40.8	11.4	40.7	12.0	40.6	12.5	40.5	12.8	40.5	13.0	40.4	13.6
		-11.8	-13.0	42.8	11.9	42.7	12.4	42.5	12.9	42.5	13.2	42.4	13.4	42.3	13.9
		-9.8	-11.0	44.8	12.3	44.7	12.8	44.6	13.3	44.5	13.5	44.4	13.8	44.3	14.3
		-9.5	-10.0	45.9	12.5	45.7	13.0	45.6	13.5	45.6	13.7	45.5	14.0	45.4	14.4
		-8.5	-9.1	46.8	12.7	46.7	13.2	46.6	13.7	46.5	13.9	46.5	14.1	46.3	14.6
		-7.0	-7.6	48.5	13.0	48.4	13.5	48.2	13.9	48.2	14.1	48.1	14.4	48.0	14.8
		-5.0	-5.6	50.8	13.4	50.7	13.8	50.5	14.3	50.5	14.5	50.4	14.7	50.3	15.1
		-3.0	-3.7	53.0	13.7	52.9	14.2	52.8	14.6	52.7	14.8	52.7	15.0	52.6	15.4
		0.0	-0.7	56.8	14.3	56.7	14.6	56.6	15.0	56.5	15.2	56.4	15.4	56.3	15.8
		3.0	2.2	60.6	14.7	60.5	15.1	60.4	15.4	60.3	15.6	60.3	15.8	59.1	15.7
		5.0	4.1	63.3	15.0	63.1	15.3	63.0	15.7	63.0	15.9	62.9	16.0	59.1	14.9
		7.0	6.0	66.0	15.3	65.8	15.6	65.7	15.9	65.6	16.1	63.4	15.4	59.1	14.1
		9.0	7.9	68.8	15.5	68.6	15.8	67.8	15.9	65.6	15.3	63.4	14.6	59.1	13.4
		11.0	9.8	71.6	15.8	71.5	16.1	67.8	15.1	65.6	14.5	63.4	13.9	59.1	12.8
		13.0	11.8	74.8	16.0	72.2	15.4	67.8	14.3	65.6	13.8	63.4	13.2	59.1	12.2
		15.0	13.7	76.5	15.8	72.2	14.7	67.8	13.6	65.6	13.1	63.4	12.6	59.1	11.6
110	495 (55.44)	-19.8	-20.0	36.2	11.1	36.1	11.6	36.0	12.2	36.0	12.5	35.9	12.7	35.8	13.3
		-18.8	-19.0	37.1	11.3	37.0	11.8	36.9	12.4	36.8	12.7	36.8	12.9	36.6	13.5
		-16.7	-17.0	38.8	11.8	38.7	12.3	38.6	12.8	38.6	13.1	38.5	13.3	38.4	13.8
		-13.7	-15.0	40.7	12.2	40.6	12.7	40.4	13.2	40.4	13.4	40.3	13.7	40.2	14.2
		-11.8	-13.0	42.6	12.6	42.5	13.1	42.4	13.6	42.3	13.8	42.3	14.0	42.2	14.5
		-9.8	-11.0	44.6	13.0	44.5	13.5	44.4	13.9	44.4	14.2	44.3	14.4	44.2	14.8
		-9.5	-10.0	45.7	13.2	45.6	13.7	45.5	14.1	45.4	14.3	45.4	14.5	45.2	15.0
		-8.5	-9.1	46.7	13.4	46.5	13.8	46.4	14.3	46.4	14.5	46.3	14.7	46.2	15.1
		-7.0	-7.6	48.3	13.7	48.2	14.1	48.1	14.5	48.0	14.7	48.0	14.9	47.9	15.3
		-5.0	-5.6	50.6	14.0	50.5	14.4	50.4	14.8	50.3	15.0	50.3	15.2	50.2	15.6
		-3.0	-3.7	52.9	14.4	52.8	14.7	52.6	15.1	52.6	15.3	52.5	15.5	52.4	15.9
		0.0	-0.7	56.6	14.8	56.5	15.2	56.4	15.5	56.3	15.7	56.3	15.9	54.2	15.3
		3.0	2.2	60.5	15.2	60.4	15.6	60.2	15.9	60.2	16.1	58.2	15.4	54.2	14.1
		5.0	4.1	63.1	15.5	63.0	15.8	62.2	15.8	60.2	15.2	58.2	14.6	54.2	13.4
		7.0	6.0	65.8	15.8	65.7	16.1	62.2	15.0	60.2	14.5	58.2	13.9	54.2	12.7
		9.0	7.9	68.6	16.0	66.1	15.4	62.2	14.3	60.2	13.7	58.2	13.2	54.2	12.1
		11.0	9.8	70.1	15.7	66.1	14.6	62.2	13.6	60.2	13.1	58.2	12.6	54.2	11.6
		13.0	11.8	70.1	14.9	66.1	13.9	62.2	12.9	60.2	12.4	58.2	11.9	54.2	11.0
		15.0	13.7	70.1	14.2	66.1	13.2	62.2	12.3	60.2	11.8	58.2	11.4	54.2	10.5
100	450 (50.40)	-19.8	-20.0	36.1	12.0	36.0	12.5	35.9	13.0	35.8	13.2	35.8	13.5	35.7	14.0
		-18.8	-19.0	36.9	12.2	36.8	12.7	36.7	13.2	36.7	13.4	36.6	13.7	36.5	14.2
		-16.7	-17.0	38.7	12.6	38.6	13.1	38.5	13.5	38.4	13.8	38.4	14.0	38.3	14.5
		-13.7	-15.0	40.5	13.0	40.4	13.4	40.3	13.9	40.2	14.1	40.2	14.3	40.1	14.8
		-11.8	-13.0	42.4	13.4	42.3	13.8	42.2	14.2	42.2	14.5	42.1	14.7	42.0	15.1
		-9.8	-11.0	44.5	13.8	44.4	14.2	44.3	14.6	44.2	14.8	44.2	15.0	44.1	15.4
		-9.5	-10.0	45.5	13.9	45.4	14.3	45.3	14.7	45.3	14.9	45.2	15.1	45.1	15.5
		-8.5	-9.1	46.5	14.1	46.4	14.5	46.3	14.9	46.2	15.1	46.2	15.3	46.1	15.6
		-7.0	-7.6	48.1	14.3	48.0	14.7	47.9	15.1	47.9	15.3	47.8	15.5	47.7	15.8
		-5.0	-5.6	50.4	14.7	50.3	15.0	50.2	15.4	50.2	15.6	50.1	15.7	49.2	15.7
		-3.0	-3.7	52.7	15.0	52.6	15.3	52.5	15.6	52.4	15.8	52.4	16.0	49.2	14.9
		0.0	-0.7	56.4	15.4	56.3	15.7	56.2	16.0	54.7	15.5	52.9	14.9	49.2	13.6
		3.0	2.2	60.3	15.8	60.1	16.0	56.5	14.9	54.7	14.3	52.9	13.7	49.2	12.6
		5.0	4.1	62.9	16.0	60.1	15.2	56.5	14.1	54.7	13.6	52.9	13.0	49.2	12.0
		7.0	6.0	63.8	15.5	60.1	14.4	56.5	13.4	54.7	12.9	52.9	12.4	49.2	11.4
		9.0	7.9	63.8	14.7	60.1	13.7	56.5	12.7	54.7	12.3	52.9	11.8	49.2	10.9
		11.0	9.8	63.8	14.0	60.1	13.1	56.5	12.1	54.7	11.7	52.9	11.2	49.2	10.4
		13.0	11.8	63.8	13.3	60.1	12.4	56.5	11.5	54.7	11.1	52.9	10.7	49.2	9.87
		15.0	13.7	63.8	12.7	60.1	11.8	56.5	11.0	54.7	10.6	52.9	10.2	49.2	9.43

4TW31482-2A

NOTES - ANMERKUNGEN - Σημειώσεις - NOTAS - REMARQUES - NOTE - OPMERKINGEN - примечания - NOTLAR

1 is shown as reference. When selecting the unit models, avoid the Outdoor air temperature range shown by .

dient als Verweis. Vermeiden Sie bei der Auswahl der Gerätemodelle den als markierten Temperaturbereich der Außenluft

Η είναι ενδεικτική. κατά την επιλογή των μοντέλων των μονάδων, αποφύγετε το εύρος θερμοκρασίας εξωτερικού αέρα που υποδεικνύεται

se muestra como referencia. Cuando seleccione los modelos de unidad, evite el intervalo de temperaturas del aire exterior indicado mediante

est montré comme référence.Lors du choix des modèles d'unités, évitez la plage de températures de l'air extérieur illustré par

valori riportati unicamente come riferimento. Nel selezionare i modelli delle unità, non considerare i valori di temperatura dell'aria esterna indicati con il colore

is als referentie getoond. Wanneer modellen van eenheden worden gekozen, vermijd dan het bereik van buitenluchttemperaturen geïllustreerd door

показан как. При выборе модели устройства избегайте внешнюю температуру воздуха, указанную в

referans olarak gösterilmektedir. Ünite modellerini seçerken, belirtilen Dış hava sıcaklığı aralığından kaçının

2 The above table shows the average value of conditions which may occur.

Die obige Tabelle zeigt den Durchschnittswert der Bedingungen, die auftreten können.

Στον παραπάνω πίνακα αναγράφεται η μέση τιμή για συνθήκες που μπορεί να προκύψουν.

La tabla de arriba muestra el valor medio de condiciones que pueden ocurrir.

Le tableau ci-dessus donne la valeur moyenne pour des conditions qui peuvent survenir.

La tabella in alto mostra il valore delle condizioni medie che si possono riscontrare.

De tabel hierboven geeft de gemiddelde waarde aan van situaties die kunnen voorvallen.

Таблица расположенная выше показывает среднее значение условий, которые могут наступить.

Yukarıdaki tablo meydana gelebilecek koşulların ortalama değerini göstermektedir.

4 Capacity tables

4 - 3 Heating capacity tables

REYQ18P9

TC: Total Capacity: kW ; PI: Power Input: kW (compressor + outdoor fan motor)

Combination (%)	Capacity index (kW)	Outdoor air temp.		Indoor air temperature: °CDB											
				16.0		18.0		20.0		21.0		22.0		24.0	
				TC	PI	TC	PI	TC	PI	TC	PI	TC	PI	TC	PI
		°CDB	°CWB	kW	kW	kW	kW	kW	kW	kW	kW	kW	kW	kW	kW
90%	405 (45.36)	-19.8	-20.0	35.9	12.8	35.8	13.3	35.7	13.8	35.7	14.0	35.6	14.2	35.5	14.7
		-18.8	-19.0	36.7	13.0	36.6	13.5	36.6	13.9	36.5	14.2	36.5	14.4	36.4	14.8
		-16.7	-17.0	38.5	13.4	38.4	13.8	38.3	14.3	38.3	14.5	38.2	14.7	38.1	15.1
		-13.7	-15.0	40.3	13.8	40.2	14.2	40.1	14.6	40.1	14.8	40.0	15.0	40.0	15.4
		-11.8	-13.0	42.3	14.1	42.2	14.5	42.1	14.9	42.0	15.1	42.0	15.3	41.9	15.7
		-9.8	-11.0	44.3	14.5	44.2	14.8	44.1	15.2	44.1	15.4	44.0	15.6	43.9	15.9
		-9.5	-10.0	45.3	14.6	45.2	15.0	45.2	15.3	45.1	15.5	45.1	15.7	44.3	15.7
		-8.5	-9.1	46.3	14.8	46.2	15.1	46.1	15.5	46.1	15.7	46.0	15.8	44.3	15.3
		-7.0	-7.6	48.0	15.0	47.9	15.3	47.8	15.7	47.7	15.8	47.6	16.0	44.3	14.6
		-5.0	-5.6	50.3	15.3	50.2	15.6	50.1	15.9	49.2	15.7	47.6	15.1	44.3	13.8
		-3.0	-3.7	52.5	15.6	52.4	15.9	50.9	15.5	49.2	14.8	47.6	14.3	44.3	13.1
		0.0	-0.7	56.3	15.9	54.1	15.3	50.9	14.2	49.2	13.6	47.6	13.1	44.3	12.0
		3.0	2.2	57.4	15.2	54.1	14.1	50.9	13.1	49.2	12.6	47.6	12.1	44.3	11.1
		5.0	4.1	57.4	14.4	54.1	13.4	50.9	12.4	49.2	12.0	47.6	11.5	44.3	10.6
		7.0	6.0	57.4	13.7	54.1	12.7	50.9	11.8	49.2	11.4	47.6	11.0	44.3	10.1
		9.0	7.9	57.4	13.0	54.1	12.1	50.9	11.3	49.2	10.9	47.6	10.4	44.3	9.65
		11.0	9.8	57.4	12.4	54.1	11.5	50.9	10.7	49.2	10.4	47.6	9.97	44.3	9.21
		13.0	11.8	57.4	11.7	54.1	11.0	50.9	10.2	49.2	9.86	47.6	9.50	44.3	8.79
		15.0	13.7	57.4	11.2	54.1	10.5	50.9	9.77	49.2	9.43	47.6	9.08	44.3	8.41
80%	360 (40.32)	-19.8	-20.0	35.7	13.7	35.6	14.1	35.6	14.5	35.5	14.7	35.5	15.0	35.4	15.4
		-18.8	-19.0	36.6	13.9	36.5	14.3	36.4	14.7	36.4	14.9	36.3	15.1	36.2	15.5
		-16.7	-17.0	38.3	14.3	38.2	14.6	38.1	15.0	38.1	15.2	38.1	15.4	38.0	15.8
		-13.7	-15.0	40.1	14.6	40.1	14.9	40.0	15.3	39.9	15.5	39.9	15.7	39.4	15.7
		-11.8	-13.0	42.1	14.9	42.0	15.2	41.9	15.6	41.9	15.7	41.8	15.9	39.4	14.8
		-9.8	-11.0	44.1	15.2	44.0	15.5	43.9	15.8	43.7	15.9	42.3	15.3	39.4	14.0
		-9.5	-10.0	45.2	15.3	45.1	15.6	45.0	16.0	43.7	15.4	42.3	14.8	39.4	13.6
		-8.5	-9.1	46.1	15.5	46.0	15.8	45.2	15.7	43.7	15.0	42.3	14.4	39.4	13.2
		-7.0	-7.6	47.8	15.7	47.7	16.0	45.2	15.0	43.7	14.4	42.3	13.8	39.4	12.7
		-5.0	-5.6	50.1	15.9	48.1	15.3	45.2	14.1	43.7	13.6	42.3	13.1	39.4	12.0
		-3.0	-3.7	51.0	15.5	48.1	14.4	45.2	13.4	43.7	12.9	42.3	12.4	39.4	11.4
		0.0	-0.7	51.0	14.2	48.1	13.3	45.2	12.3	43.7	11.9	42.3	11.4	39.4	10.5
		3.0	2.2	51.0	13.1	48.1	12.3	45.2	11.4	43.7	11.0	42.3	10.6	39.4	9.76
		5.0	4.1	51.0	12.5	48.1	11.7	45.2	10.9	43.7	10.5	42.3	10.1	39.4	9.30
		7.0	6.0	51.0	11.9	48.1	11.1	45.2	10.3	43.7	9.97	42.3	9.60	39.4	8.88
		9.0	7.9	51.0	11.3	48.1	10.6	45.2	9.86	43.7	9.51	42.3	9.16	39.4	8.48
		11.0	9.8	51.0	10.8	48.1	10.1	45.2	9.41	43.7	9.08	42.3	8.75	39.4	8.11
		13.0	11.8	51.0	10.3	48.1	9.61	45.2	8.98	43.7	8.66	42.3	8.35	39.4	7.75
		15.0	13.7	51.0	9.81	48.1	9.19	45.2	8.59	43.7	8.29	42.3	8.00	39.4	7.42
70%	315 (35.28)	-19.8	-20.0	35.5	14.6	35.5	15.0	35.4	15.3	35.4	15.5	35.3	15.7	34.5	15.5
		-18.8	-19.0	36.4	14.8	36.3	15.1	36.2	15.5	36.2	15.6	36.2	15.8	34.5	15.0
		-16.7	-17.0	38.1	15.1	38.1	15.4	38.0	15.7	38.0	15.9	37.0	15.5	34.5	14.2
		-13.7	-15.0	40.0	15.4	39.9	15.7	39.6	15.8	38.3	15.2	37.0	14.6	34.5	13.4
		-11.8	-13.0	41.9	15.6	41.8	15.9	39.6	14.9	38.3	14.3	37.0	13.8	34.5	12.6
		-9.8	-11.0	43.9	15.9	42.1	15.2	39.6	14.1	38.3	13.5	37.0	13.0	34.5	11.9
		-9.5	-10.0	44.6	15.8	42.1	14.7	39.6	13.7	38.3	13.1	37.0	12.6	34.5	11.6
		-8.5	-9.1	44.6	15.4	42.1	14.4	39.6	13.3	38.3	12.8	37.0	12.3	34.5	11.3
		-7.0	-7.6	44.6	14.8	42.1	13.7	39.6	12.8	38.3	12.3	37.0	11.8	34.5	10.9
		-5.0	-5.6	44.6	13.9	42.1	13.0	39.6	12.1	38.3	11.6	37.0	11.2	34.5	10.3
		-3.0	-3.7	44.6	13.2	42.1	12.3	39.6	11.5	38.3	11.0	37.0	10.6	34.5	9.79
		0.0	-0.7	44.6	12.1	42.1	11.3	39.6	10.6	38.3	10.2	37.0	9.80	34.5	9.06
		3.0	2.2	44.6	11.2	42.1	10.5	39.6	9.80	38.3	9.45	37.0	9.11	34.5	8.43
		5.0	4.1	44.6	10.7	42.1	10.0	39.6	9.34	38.3	9.01	37.0	8.69	34.5	8.05
		7.0	6.0	44.6	10.2	42.1	9.55	39.6	8.91	38.3	8.60	37.0	8.30	34.5	7.69
		9.0	7.9	44.6	9.72	42.1	9.11	39.6	8.52	38.3	8.22	37.0	7.93	34.5	7.36
		11.0	9.8	44.6	9.28	42.1	8.71	39.6	8.14	38.3	7.87	37.0	7.59	34.5	7.05
		13.0	11.8	44.6	8.85	42.1	8.31	39.6	7.78	38.3	7.52	37.0	7.26	34.5	6.75
		15.0	13.7	44.6	8.47	42.1	7.96	39.6	7.46	38.3	7.21	37.0	6.96	34.5	6.48
60%	270 (30.24)	-19.8	-20.0	35.4	15.5	35.3	15.8	33.9	15.2	32.8	14.6	31.7	14.0	29.5	12.8
		-18.8	-19.0	36.2	15.6	36.1	15.9	33.9	14.7	32.8	14.2	31.7	13.6	29.5	12.5
		-16.7	-17.0	38.0	15.9	36.1	15.0	33.9	13.9	32.8	13.4	31.7	12.8	29.5	11.8
		-13.7	-15.0	38.3	15.2	36.1	14.1	33.9	13.1	32.8	12.6	31.7	12.1	29.5	11.2
		-11.8	-13.0	38.3	14.3	36.1	13.3	33.9	12.4	32.8	11.9	31.7	11.5	29.5	10.6
		-9.8	-11.0	38.3	13.5	36.1	12.6	33.9	11.7	32.8	11.3	31.7	10.9	29.5	10.0
		-9.5	-10.0	38.3	13.1	36.1	12.3	33.9	11.4	32.8	11.0	31.7	10.6	29.5	9.74
		-8.5	-9.1	38.3	12.8	36.1	11.9	33.9	11.1	32.8	10.7	31.7	10.3	29.5	9.51
		-7.0	-7.6	38.3	12.3	36.1	11.5	33.9	10.7	32.8	10.3	31.7	9.90	29.5	9.14
		-5.0	-5.6	38.3	11.6	36.1	10.8	33.9	10.1	32.8	9.74	31.7	9.39	29.5	8.68
		-3.0	-3.7	38.3	11.0	36.1	10.3	33.9	9.61	32.8	9.27	31.7	8.93	29.5	8.27
		0.0	-0.7	38.3	10.2	36.1	9.53	33.9	8.90	32.8	8.59	31.7	8.28	29.5	7.68
		3.0	2.2	38.3	9.44	36.1	8.86	33.9	8.28	32.8	8.00	31.7	7.72	29.5	7.17
		5.0	4.1	38.3	9.01	36.1	8.45	33.9	7.91	32.8	7.64	31.7	7.38	29.5	6.86
		7.0	6.0	38.3	8.60	36.1	8.07	33.9	7.56	32.8	7.31	31.7	7.06	29.5	6.57
		9.0	7.9	38.3	8.22	36.1	7.72	33.9	7.24	32.8	7.00	31.7	6.76	29.5	6.30
		11.0	9.8	38.3	7.86	36.1	7.39	33.9	6.93	32.8	6.71	31.7	6.48	29.5	6.04
		13.0	11.8	38.3	7.51	36.1	7.07	33.9	6.64	32.8	6.42	31.7	6.21	29.5	5.79
		15.0	13.7	38.3	7.20	36.1	6.78	33.9	6.37	32.8	6.17	31.7	5.97	29.5	5.57
50%	225 (25.20)	-19.8	-20.0	31.9	14.1	30.1	13.1	28.3	12.2	27.3	11.7	26.4	11.3	24.6	10.4
		-18.8	-19.0	31.9	13.7	30.1	12.7	28.3	11.8	27.3	11.4	26.4	11.0	24.6	10.1
		-16.7	-17.0	31.9	12.9	30.1	12.0	28.3	11.2	27.3	10.8	26.4	10.4	24.6	9.59
		-13.7	-15.0	31.9	12.2	30.1	11.4	28.3	10.6	27.3	10.2	26.4	9.84	24.6	9.10
		-11.8	-13.0	31.9	11.5	30.1	10.8	28.3	10.0	27.3	9.69	26.4	9.33	24.6	8.63
		-9.8	-11.0	31.9	10.9	30.1	10.2	28.3	9.52	27.3	9.18	26.4	8.85	24.6	8.20
		-9.5	-10.0	31.9	10.6	30.1	9.94	28.3	9.27	27.3	8.95	26.4	8.62	24.6	7.99
		-8.5	-9.1	31.9	10.4	30.1	9.70	28.3	9.06	27.3	8.74	26.4	8.42	24.6	7.81
		-7.0	-7.6	31.9	9.95	30.1	9.32	28.3	8.71	27.3	8.41	26.4	8.11	24.6	7.52
		-5.0	-5.6	31.9	9.44	30.1	8.85	28.3	8.27	27.3	7.99	26.4	7.71	24.6	7.16
		-3.0	-3.7	31.9	8.98	30.1	8.43	28.3	7.89	27.3	7.62	26.4	7.36	24.6	6.84
		0.0	-0.7	31.9	8.33	30.1	7.82	28.3	7.33	27.3	7.09	26.4	6.85	24.6	6.37
		3.0	2.2	31.9	7.76	30.1	7.30	28.3	6.84	27.3	6.62	26.4	6.40	24.6	5.97
		5.0	4.1	31.9	7.41	30.1	6.98	28.3	6.55	27.3	6.34	26.4	6.13	24.6	5.72
		7.0	6.0	31.9	7.09	30.1	6.68	28.3	6.28	27.3	6.08	26.4	5.88	24.6	5.49
		9.0	7.9	31.9	6.80	30.1	6.41	28.3	6.02	27.3	5.83	26.4	5.65	24.6	5.28
		11.0	9.8	31.9	6.52	30.1	6.15	28.3	5.78	27.3	5.60	26.4	5.43	24.6	5.08
		13.0	11.8	31.9	6.24	30.1	5.89	28.3	5.55	27.3	5.38	26.4	5.21	24.6	4.88
		15.0	13.7	31.9	6.00	30.1	5.67	28.3	5.34	27.3	5.18	26.4	5.02	24.6	4.70

4TW31482-2A

4 Capacity tables

4 - 3 Heating capacity tables

REYQ20P9

TC: Total Capacity: kW ; PI: Power Input: kW (compressor + outdoor fan motor)

Combination (%)	Capacity index (kW)	Outdoor air temp.		Indoor air temperature: °CDB											
				16.0		18.0		20.0		21.0		22.0		24.0	
				TC	PI	TC	PI	TC	PI	TC	PI	TC	PI	TC	PI
		°CDB	°CWB	kW	kW	kW	kW	kW	kW	kW	kW	kW	kW	kW	kW
130	650 (72.67)	-19.8	-20.0	37.0	8.00	36.8	8.75	36.7	9.50	36.6	9.87	36.5	10.2	36.4	11.0
		-18.8	-19.0	37.8	8.31	37.6	9.04	37.5	9.77	37.4	10.1	37.3	10.5	37.2	11.2
		-16.7	-17.0	39.5	8.91	39.3	9.61	39.2	10.3	39.1	10.7	39.1	11.0	38.9	11.7
		-13.7	-15.0	41.3	9.49	41.2	10.2	41.0	10.8	40.9	11.2	40.9	11.5	40.7	12.2
		-11.8	-13.0	43.2	10.1	43.1	10.7	42.9	11.3	42.9	11.6	42.8	12.0	42.7	12.6
		-9.8	-11.0	45.3	10.6	45.1	11.2	45.0	11.8	44.9	12.1	44.8	12.4	44.7	13.0
		-9.5	-10.0	46.3	10.9	46.2	11.4	46.0	12.0	46.0	12.3	45.9	12.6	45.7	13.2
		-8.5	-9.1	47.3	11.1	47.1	11.7	47.0	12.2	46.9	12.5	46.9	12.8	46.7	13.4
		-7.0	-7.6	48.9	11.5	48.8	12.0	48.7	12.6	48.6	12.8	48.5	13.1	48.4	13.7
		-5.0	-5.6	51.3	11.9	51.1	12.5	51.0	13.0	50.9	13.3	50.8	13.5	50.7	14.0
		-3.0	-3.7	53.5	12.4	53.4	12.9	53.3	13.4	53.2	13.6	53.1	13.9	53.0	14.4
		0.0	-0.7	57.4	13.0	57.2	13.5	57.1	13.9	57.0	14.2	56.9	14.4	56.8	14.9
		3.0	2.2	61.3	13.6	61.1	14.0	61.0	14.4	60.9	14.7	60.8	14.9	60.7	15.3
		5.0	4.1	63.9	13.9	63.8	14.3	63.6	14.7	63.6	15.0	63.5	15.2	63.4	15.6
		7.0	6.0	66.7	14.2	66.6	14.6	66.4	15.0	66.3	15.2	66.3	15.5	66.1	15.9
		9.0	7.9	69.6	14.5	69.4	14.9	69.3	15.3	69.2	15.5	69.1	15.7	69.0	16.1
		11.0	9.8	72.5	14.8	72.4	15.2	72.2	15.6	72.2	15.8	72.1	16.0	70.8	15.9
		13.0	11.8	75.7	15.1	75.6	15.5	75.5	15.9	75.4	16.0	75.3	16.2	70.8	15.1
		15.0	13.7	78.9	15.4	78.8	15.8	78.6	16.1	78.5	16.3	76.0	15.7	70.8	14.4
120	600 (67.08)	-19.8	-20.0	36.8	9.01	36.6	9.70	36.5	10.4	36.4	10.7	36.4	11.1	36.2	11.8
		-18.8	-19.0	37.6	9.30	37.4	9.97	37.3	10.6	37.2	11.0	37.2	11.3	37.0	12.0
		-16.7	-17.0	39.3	9.85	39.2	10.5	39.0	11.1	39.0	11.5	38.9	11.8	38.8	12.4
		-13.7	-15.0	41.1	10.4	41.0	11.0	40.8	11.6	40.8	11.9	40.7	12.2	40.6	12.8
		-11.8	-13.0	43.0	10.9	42.9	11.5	42.8	12.1	42.7	12.4	42.6	12.7	42.5	13.3
		-9.8	-11.0	45.1	11.4	44.9	12.0	44.8	12.5	44.7	12.8	44.7	13.1	44.5	13.6
		-9.5	-10.0	46.1	11.6	46.0	12.2	45.9	12.7	45.8	13.0	45.7	13.3	45.6	13.8
		-8.5	-9.1	47.1	11.9	47.0	12.4	46.8	12.9	46.8	13.2	46.7	13.5	46.6	14.0
		-7.0	-7.6	48.8	12.2	48.6	12.7	48.5	13.2	48.4	13.5	48.4	13.7	48.2	14.3
		-5.0	-5.6	51.1	12.6	50.9	13.1	50.8	13.6	50.7	13.9	50.7	14.1	50.5	14.6
		-3.0	-3.7	53.4	13.0	53.2	13.5	53.1	14.0	53.0	14.2	53.0	14.4	52.8	14.9
		0.0	-0.7	57.2	13.6	57.0	14.1	56.9	14.5	56.8	14.7	56.8	14.9	56.6	15.4
		3.0	2.2	61.1	14.2	60.9	14.6	60.8	15.0	60.7	15.2	60.7	15.4	60.5	15.8
		5.0	4.1	63.7	14.5	63.6	14.9	63.5	15.3	63.4	15.5	63.3	15.6	63.2	16.0
		7.0	6.0	66.5	14.8	66.4	15.2	66.2	15.5	66.2	15.7	66.1	15.9	65.4	16.0
		9.0	7.9	69.4	15.1	69.2	15.4	69.1	15.8	69.0	16.0	69.0	16.1	65.4	15.2
		11.0	9.8	72.3	15.4	72.2	15.7	72.1	16.0	72.0	16.2	70.2	15.8	65.4	14.5
		13.0	11.8	75.5	15.6	75.4	16.0	75.0	16.2	72.6	15.6	70.2	14.9	65.4	13.7
		15.0	13.7	78.7	15.9	78.6	16.2	75.0	15.4	72.6	14.8	70.2	14.2	65.4	13.1
110	550 (61.49)	-19.8	-20.0	36.6	10.0	36.4	10.7	36.3	11.3	36.3	11.6	36.2	11.9	36.1	12.6
		-18.8	-19.0	37.4	10.3	37.3	10.9	37.1	11.5	37.1	11.8	37.0	12.1	36.9	12.8
		-16.7	-17.0	39.1	10.8	39.0	11.4	38.9	12.0	38.8	12.3	38.7	12.6	38.6	13.2
		-13.7	-15.0	40.9	11.3	40.8	11.9	40.7	12.4	40.6	12.7	40.6	13.0	40.4	13.5
		-11.8	-13.0	42.8	11.8	42.7	12.3	42.6	12.8	42.5	13.1	42.5	13.4	42.4	13.9
		-9.8	-11.0	44.9	12.2	44.8	12.7	44.6	13.2	44.6	13.5	44.5	13.8	44.4	14.3
		-9.5	-10.0	45.9	12.4	45.8	12.9	45.7	13.4	45.6	13.7	45.6	13.9	45.4	14.4
		-8.5	-9.1	46.9	12.6	46.8	13.1	46.7	13.6	46.6	13.9	46.5	14.1	46.4	14.6
		-7.0	-7.6	48.6	13.0	48.4	13.4	48.3	13.9	48.3	14.1	48.2	14.4	48.1	14.8
		-5.0	-5.6	50.9	13.4	50.7	13.8	50.6	14.3	50.6	14.5	50.5	14.7	50.4	15.2
		-3.0	-3.7	53.2	13.7	53.0	14.2	52.9	14.6	52.9	14.8	52.8	15.0	52.7	15.4
		0.0	-0.7	57.0	14.3	56.8	14.7	56.7	15.1	56.7	15.3	56.6	15.5	56.5	15.9
		3.0	2.2	60.9	14.7	60.8	15.1	60.6	15.5	60.6	15.7	60.5	15.9	59.9	16.0
		5.0	4.1	63.5	15.0	63.4	15.4	63.3	15.8	63.2	15.9	63.2	16.1	59.9	15.2
		7.0	6.0	66.3	15.3	66.2	15.7	66.1	16.0	66.0	16.2	64.3	15.7	59.9	14.5
		9.0	7.9	69.2	15.6	69.1	15.9	68.8	16.2	66.5	15.6	64.3	14.9	59.9	13.7
		11.0	9.8	72.1	15.9	72.0	16.2	68.8	15.4	66.5	14.8	64.3	14.2	59.9	13.1
		13.0	11.8	75.4	16.1	73.2	15.7	68.8	14.6	66.5	14.0	64.3	13.5	59.9	12.4
		15.0	13.7	77.6	16.0	73.2	15.0	68.8	13.9	66.5	13.4	64.3	12.9	59.9	11.9
100	500 (55.90)	-19.8	-20.0	36.4	11.0	36.3	11.6	36.2	12.2	36.1	12.5	36.0	12.8	35.9	13.3
		-18.8	-19.0	37.2	11.3	37.1	11.8	37.0	12.4	36.9	12.7	36.9	13.0	36.8	13.5
		-16.7	-17.0	38.9	11.7	38.8	12.3	38.7	12.8	38.6	13.1	38.6	13.3	38.5	13.9
		-13.7	-15.0	40.7	12.2	40.6	12.7	40.5	13.2	40.5	13.5	40.4	13.7	40.3	14.2
		-11.8	-13.0	42.7	12.6	42.5	13.1	42.4	13.6	42.4	13.8	42.3	14.1	42.2	14.6
		-9.8	-11.0	44.7	13.0	44.6	13.5	44.5	14.0	44.4	14.2	44.3	14.4	44.2	14.9
		-9.5	-10.0	45.7	13.2	45.6	13.7	45.5	14.2	45.5	14.4	45.4	14.6	45.3	15.1
		-8.5	-9.1	46.7	13.4	46.6	13.9	46.5	14.3	46.4	14.5	46.4	14.8	46.3	15.2
		-7.0	-7.6	48.4	13.7	48.3	14.1	48.1	14.6	48.1	14.8	48.0	15.0	47.9	15.4
		-5.0	-5.6	50.7	14.1	50.6	14.5	50.5	14.9	50.4	15.1	50.3	15.3	50.2	15.7
		-3.0	-3.7	53.0	14.4	52.9	14.8	52.7	15.2	52.7	15.4	52.6	15.6	52.5	16.0
		0.0	-0.7	56.8	14.9	56.7	15.3	56.6	15.6	56.5	15.8	56.4	16.0	54.5	15.5
		3.0	2.2	60.7	15.3	60.6	15.7	60.5	16.0	60.4	16.2	58.5	15.6	54.5	14.3
		5.0	4.1	63.4	15.6	63.2	15.9	62.5	16.0	60.5	15.4	58.5	14.8	54.5	13.6
		7.0	6.0	66.1	15.9	66.0	16.2	62.5	15.2	60.5	14.6	58.5	14.0	54.5	12.9
		9.0	7.9	69.0	16.1	66.5	15.6	62.5	14.4	60.5	13.9	58.5	13.4	54.5	12.3
		11.0	9.8	70.5	15.9	66.5	14.8	62.5	13.7	60.5	13.2	58.5	12.7	54.5	11.7
		13.0	11.8	70.5	15.0	66.5	14.0	62.5	13.0	60.5	12.6	58.5	12.1	54.5	11.2
		15.0	13.7	70.5	14.3	66.5	13.4	62.5	12.4	60.5	12.0	58.5	11.5	54.5	10.7

4TW31482-2A

NOTES - ANMERKUNGEN - Σημειώσεις - NOTAS - REMARQUES - NOTE - OPMERKINGEN - примечания - NOTLAR

1 is shown as reference. When selecting the unit models, avoid the Outdoor air temperature range shown by .

dient als Verweis. Vermeiden Sie bei der Auswahl der Gerätemodelle den als markierten Temperaturbereich der Außenluft

Η είναι ενδεικτική. κατά την επιλογή των μοντέλων των μονάδων, αποφύγετε το εύρος θερμοκρασίας εξωτερικού αέρα που υποδεικνύεται

se muestra como referencia. Cuando seleccione los modelos de unidad, evite el intervalo de temperaturas del aire exterior indicado mediante

est montré comme référence.Lors du choix des modèles d'unités, évitez la plage de températures de l'air extérieur illustré par

valori riportati unicamente come riferimento. Nel selezionare i modelli delle unità, non considerare i valori di temperatura dell'aria esterna indicati con il colore

is als referentie getoond. Wanneer modellen van eenheden worden gekozen, vermijd dan het bereik van buitenluchttemperaturen geïllustreerd door

показан как. При выборе модели устройства избегайте внешнюю температуру воздуха, указанную в

referans olarak gösterilmektedir. Ünite modellerini seçerken, belirtilen Dış hava sıcaklığı aralığından kaçının

2 The above table shows the average value of conditions which may occur.

Die obige Tabelle zeigt den Durchschnittswert der Bedingungen, die auftreten können.

Στον παραπάνω πίνακα αναγράφεται η μέση τιμή για συνθήκες που μπορεί να προκύψουν.

La tabla de arriba muestra el valor medio de condiciones que pueden ocurrir.

Le tableau ci-dessus donne la valeur moyenne pour des conditions qui peuvent survenir.

La tabella in alto mostra il valore delle condizioni medie che si possono riscontrare.

De tabel hierboven geeft de gemiddelde waarde aan van situaties die kunnen voorvallen.

Таблица расположенная выше показывает среднее значение условий, которые могут наступить.

Yukarıdaki tablo meydana gelebilecek koşulların ortalama değerini göstermektedir.

4 Capacity tables

4 - 3 Heating capacity tables

REYQ20P9

TC: Total Capacity: kW ; PI: Power Input: kW (compressor + outdoor fan motor)

Combination (%)	Capacity index (kW)	Outdoor air temp.		Indoor air temperature: °CDB											
				16.0		18.0		20.0		21.0		22.0		24.0	
				TC	PI	TC	PI	TC	PI	TC	PI	TC	PI	TC	PI
		°CDB	°CWB	kW	kW	kW	kW	kW	kW	kW	kW	kW	kW	kW	kW
90%	450 (50.31)	-19.8	-20.0	36.2	12.0	36.1	12.6	36.0	13.1	35.9	13.3	35.9	13.6	35.8	14.1
		-18.8	-19.0	37.0	12.3	36.9	12.8	36.8	13.3	36.7	13.5	36.7	13.8	36.6	14.3
		-16.7	-17.0	38.7	12.7	38.6	13.2	38.5	13.6	38.5	13.9	38.4	14.1	38.3	14.6
		-13.7	-15.0	40.5	13.1	40.4	13.6	40.3	14.0	40.3	14.2	40.2	14.5	40.1	14.9
		-11.8	-13.0	42.5	13.5	42.4	13.9	42.3	14.4	42.2	14.6	42.2	14.8	42.1	15.2
		-9.8	-11.0	44.5	13.9	44.4	14.3	44.3	14.7	44.2	14.9	44.2	15.1	44.1	15.5
		-9.5	-10.0	45.5	14.0	45.4	14.5	45.3	14.9	45.3	15.1	45.2	15.3	45.1	15.7
		-8.5	-9.1	46.5	14.2	46.4	14.6	46.3	15.0	46.3	15.2	46.2	15.4	46.1	15.8
		-7.0	-7.6	48.2	14.5	48.1	14.8	48.0	15.2	47.9	15.4	47.9	15.6	47.8	16.0
		-5.0	-5.6	50.5	14.8	50.4	15.2	50.3	15.5	50.2	15.7	50.2	15.9	49.0	15.7
		-3.0	-3.7	52.8	15.1	52.7	15.4	52.6	15.8	52.5	16.0	52.5	16.2	49.0	14.9
		0.0	-0.7	56.6	15.5	56.5	15.9	56.3	16.1	54.4	15.5	52.6	14.9	49.0	13.7
		3.0	2.2	60.5	15.9	59.9	16.0	56.3	14.9	54.4	14.3	52.6	13.8	49.0	12.7
		5.0	4.1	63.2	16.2	59.9	15.2	56.3	14.1	54.4	13.6	52.6	13.1	49.0	12.0
		7.0	6.0	63.5	15.5	59.9	14.4	56.3	13.4	54.4	12.9	52.6	12.4	49.0	11.5
		9.0	7.9	63.5	14.7	59.9	13.7	56.3	12.8	54.4	12.3	52.6	11.8	49.0	10.9
		11.0	9.8	63.5	14.0	59.9	13.1	56.3	12.2	54.4	11.7	52.6	11.3	49.0	10.4
		13.0	11.8	63.5	13.3	59.9	12.4	56.3	11.6	54.4	11.2	52.6	10.7	49.0	9.94
		15.0	13.7	63.5	12.7	59.9	11.8	56.3	11.0	54.4	10.7	52.6	10.3	49.0	9.50
80%	400 (44.72)	-19.8	-20.0	36.0	13.1	35.9	13.5	35.8	14.0	35.8	14.2	35.7	14.4	35.6	14.9
		-18.8	-19.0	36.8	13.2	36.7	13.7	36.6	14.1	36.6	14.4	36.5	14.6	36.5	15.0
		-16.7	-17.0	38.5	13.6	38.4	14.1	38.3	14.5	38.3	14.7	38.3	14.9	38.2	15.3
		-13.7	-15.0	40.3	14.0	40.3	14.4	40.2	14.8	40.1	15.0	40.1	15.2	40.0	15.6
		-11.8	-13.0	42.3	14.3	42.2	14.7	42.1	15.1	42.0	15.3	42.0	15.5	41.9	15.9
		-9.8	-11.0	44.3	14.7	44.2	15.0	44.1	15.4	44.1	15.6	44.0	15.8	43.6	16.0
		-9.5	-10.0	45.3	14.8	45.3	15.2	45.2	15.6	45.1	15.7	45.1	15.9	43.6	15.5
		-8.5	-9.1	46.3	15.0	46.2	15.3	46.1	15.7	46.1	15.9	46.1	16.1	43.6	15.1
		-7.0	-7.6	48.0	15.2	47.9	15.6	47.8	15.9	47.8	16.1	46.8	15.8	43.6	14.5
		-5.0	-5.6	50.3	15.5	50.2	15.8	50.0	16.1	48.4	15.5	46.8	14.9	43.6	13.7
		-3.0	-3.7	52.6	15.8	52.5	16.1	50.0	15.3	48.4	14.7	46.8	14.1	43.6	13.0
		0.0	-0.7	56.4	16.2	53.2	15.1	50.0	14.0	48.4	13.5	46.8	13.0	43.6	12.0
		3.0	2.2	56.4	14.9	53.2	13.9	50.0	13.0	48.4	12.5	46.8	12.0	43.6	11.1
		5.0	4.1	56.4	14.2	53.2	13.2	50.0	12.3	48.4	11.9	46.8	11.4	43.6	10.6
		7.0	6.0	56.4	13.5	53.2	12.6	50.0	11.7	48.4	11.3	46.8	10.9	43.6	10.1
		9.0	7.9	56.4	12.8	53.2	12.0	50.0	11.2	48.4	10.8	46.8	10.4	43.6	9.61
		11.0	9.8	56.4	12.2	53.2	11.4	50.0	10.7	48.4	10.3	46.8	9.91	43.6	9.18
		13.0	11.8	56.4	11.6	53.2	10.9	50.0	10.2	48.4	9.80	46.8	9.45	43.6	8.76
		15.0	13.7	56.4	11.1	53.2	10.4	50.0	9.71	48.4	9.37	46.8	9.04	43.6	8.39
70%	350 (39.13)	-19.8	-20.0	35.8	14.1	35.7	14.5	35.6	14.9	35.6	15.1	35.6	15.3	35.5	15.7
		-18.8	-19.0	36.6	14.2	36.5	14.6	36.5	15.0	36.4	15.2	36.4	15.4	36.3	15.8
		-16.7	-17.0	38.3	14.6	38.3	14.9	38.2	15.3	38.1	15.5	38.1	15.7	38.0	16.1
		-13.7	-15.0	40.1	14.9	40.1	15.2	40.0	15.6	40.0	15.8	39.9	16.0	38.1	15.2
		-11.8	-13.0	42.1	15.2	42.0	15.5	41.9	15.9	41.9	16.1	40.9	15.7	38.1	14.4
		-9.8	-11.0	44.1	15.5	44.0	15.8	43.8	16.0	42.3	15.4	40.9	14.8	38.1	13.6
		-9.5	-10.0	45.2	15.6	45.1	16.0	43.8	15.6	42.3	15.0	40.9	14.4	38.1	13.2
		-8.5	-9.1	46.1	15.8	46.0	16.1	43.8	15.2	42.3	14.6	40.9	14.0	38.1	12.9
		-7.0	-7.6	47.8	16.0	46.6	15.7	43.8	14.5	42.3	14.0	40.9	13.4	38.1	12.4
		-5.0	-5.6	49.4	15.9	46.6	14.8	43.8	13.7	42.3	13.2	40.9	12.7	38.1	11.7
		-3.0	-3.7	49.4	15.0	46.6	14.0	43.8	13.0	42.3	12.6	40.9	12.1	38.1	11.1
		0.0	-0.7	49.4	13.8	46.6	12.9	43.8	12.0	42.3	11.6	40.9	11.2	38.1	10.3
		3.0	2.2	49.4	12.8	46.6	11.9	43.8	11.1	42.3	10.7	40.9	10.3	38.1	9.58
		5.0	4.1	49.4	12.1	46.6	11.4	43.8	10.6	42.3	10.2	40.9	9.86	38.1	9.14
		7.0	6.0	49.4	11.6	46.6	10.8	43.8	10.1	42.3	9.76	40.9	9.41	38.1	8.73
		9.0	7.9	49.4	11.0	46.6	10.3	43.8	9.65	42.3	9.32	40.9	8.99	38.1	8.34
		11.0	9.8	49.4	10.5	46.6	9.86	43.8	9.22	42.3	8.91	40.9	8.60	38.1	7.99
		13.0	11.8	49.4	10.0	46.6	9.40	43.8	8.80	42.3	8.50	40.9	8.21	38.1	7.64
		15.0	13.7	49.4	9.58	46.6	9.00	43.8	8.43	42.3	8.15	40.9	7.87	38.1	7.32
60%	300 (33.54)	-19.8	-20.0	35.6	15.1	35.5	15.4	35.5	15.8	35.4	15.9	35.1	15.9	32.7	14.6
		-18.8	-19.0	36.4	15.2	36.4	15.6	36.3	15.9	36.3	16.1	35.1	15.5	32.7	14.2
		-16.7	-17.0	38.1	15.5	38.1	15.8	37.5	15.8	36.3	15.2	35.1	14.6	32.7	13.4
		-13.7	-15.0	40.0	15.8	39.9	16.1	37.5	14.9	36.3	14.4	35.1	13.8	32.7	12.7
		-11.8	-13.0	41.9	16.1	39.9	15.2	37.5	14.1	36.3	13.6	35.1	13.1	32.7	12.0
		-9.8	-11.0	42.3	15.4	39.9	14.4	37.5	13.4	36.3	12.9	35.1	12.4	32.7	11.4
		-9.5	-10.0	42.3	15.0	39.9	14.0	37.5	13.0	36.3	12.5	35.1	12.0	32.7	11.1
		-8.5	-9.1	42.3	14.6	39.9	13.6	37.5	12.7	36.3	12.2	35.1	11.7	32.7	10.8
		-7.0	-7.6	42.3	14.0	39.9	13.1	37.5	12.2	36.3	11.7	35.1	11.3	32.7	10.4
		-5.0	-5.6	42.3	13.2	39.9	12.4	37.5	11.5	36.3	11.1	35.1	10.7	32.7	9.89
		-3.0	-3.7	42.3	12.5	39.9	11.7	37.5	10.9	36.3	10.6	35.1	10.2	32.7	9.42
		0.0	-0.7	42.3	11.6	39.9	10.8	37.5	10.1	36.3	9.77	35.1	9.42	32.7	8.73
		3.0	2.2	42.3	10.7	39.9	10.1	37.5	9.41	36.3	9.08	35.1	8.77	32.7	8.14
		5.0	4.1	42.3	10.2	39.9	9.59	37.5	8.98	36.3	8.67	35.1	8.37	32.7	7.78
		7.0	6.0	42.3	9.75	39.9	9.16	37.5	8.58	36.3	8.29	35.1	8.01	32.7	7.45
		9.0	7.9	42.3	9.31	39.9	8.75	37.5	8.20	36.3	7.93	35.1	7.66	32.7	7.14
		11.0	9.8	42.3	8.90	39.9	8.37	37.5	7.85	36.3	7.60	35.1	7.34	32.7	6.84
		13.0	11.8	42.3	8.50	39.9	8.00	37.5	7.51	36.3	7.27	35.1	7.03	32.7	6.55
		15.0	13.7	42.3	8.14	39.9	7.67	37.5	7.20	36.3	6.97	35.1	6.75	32.7	6.30
50%	250 (27.95)	-19.8	-20.0	35.3	16.0	33.3	14.9	31.3	13.8	30.2	13.3	29.2	12.8	27.2	11.8
		-18.8	-19.0	35.3	15.5	33.3	14.5	31.3	13.5	30.2	13.0	29.2	12.5	27.2	11.5
		-16.7	-17.0	35.3	14.7	33.3	13.7	31.3	12.8	30.2	12.3	29.2	11.8	27.2	10.9
		-13.7	-15.0	35.3	13.9	33.3	13.0	31.3	12.1	30.2	11.6	29.2	11.2	27.2	10.4
		-11.8	-13.0	35.3	13.1	33.3	12.3	31.3	11.4	30.2	11.0	29.2	10.6	27.2	9.83
		-9.8	-11.0	35.3	12.4	33.3	11.6	31.3	10.9	30.2	10.5	29.2	10.1	27.2	9.34
		-9.5	-10.0	35.3	12.1	33.3	11.3	31.3	10.6	30.2	10.2	29.2	9.83	27.2	9.10
		-8.5	-9.1	35.3	11.8	33.3	11.1	31.3	10.3	30.2	9.96	29.2	9.60	27.2	8.90
		-7.0	-7.6	35.3	11.3	33.3	10.6	31.3	9.92	30.2	9.58	29.2	9.24	27.2	8.57
		-5.0	-5.6	35.3	10.8	33.3	10.1	31.3	9.42	30.2	9.10	29.2	8.78	27.2	8.15
		-3.0	-3.7	35.3	10.2	33.3	9.60	31.3	8.98	30.2	8.67	29.2	8.37	27.2	7.78
		0.0	-0.7	35.3	9.47	33.3	8.90	31.3	8.34	30.2	8.06	29.2	7.78	27.2	7.25
		3.0	2.2	35.3	8.81	33.3	8.29	31.3	7.77	30.2	7.52	29.2	7.27	27.2	6.78
		5.0	4.1	35.3	8.42	33.3	7.92	31.3	7.44	30.2	7.20	29.2	6.96	27.2	6.49
		7.0	6.0	35.3	8.05	33.3	7.58	31.3	7.12	30.2	6.90	29.2	6.67	27.2	6.23
		9.0	7.9	35.3	7.70	33.3	7.26	31.3	6.83	30.2	6.61	29.2	6.40	27.2	5.98
		11.0	9.8	35.3	7.38	33.3	6.96	31.3	6.55	30.2	6.35	29.2	6.15	27.2	5.75
		13.0	11.8	35.3	7.06	33.3	6.67	31.3	6.28	30.2	6.09	29.2	5.90	27.2	5.52
		15.0	13.7	35.3	6.78	33.3	6.41	31.3	6.04	30.2	5.85	29.2	5.67	27.2	5.32

4TW31482-2A

4 Capacity tables

4 - 3 Heating capacity tables

REYQ22P8

TC: Total Capacity: kW ; PI: Power Input: kW (compressor + outdoor fan motor)

Combination (%)	Capacity index (kW)	Outdoor air temp.		Indoor air temperature: °CDB											
				16.0		18.0		20.0		21.0		22.0		24.0	
				TC	PI	TC	PI	TC	PI	TC	PI	TC	PI	TC	PI
		°CDB	°CWB	kW	kW	kW	kW	kW	kW	kW	kW	kW	kW	kW	kW
130	715 (79.95)	-19.8	-20.0	41.1	9.52	41.0	10.4	40.8	11.2	40.7	11.7	40.6	12.1	40.5	13.0
		-18.8	-19.0	41.8	9.79	41.7	10.6	41.5	11.5	41.4	11.9	41.4	12.3	41.2	13.2
		-16.7	-17.0	43.4	10.4	43.2	11.2	43.1	12.0	43.0	12.4	42.9	12.8	42.7	13.6
		-13.7	-15.0	45.1	11.0	45.0	11.7	44.8	12.5	44.7	12.9	44.7	13.3	44.5	14.1
		-11.8	-13.0	47.1	11.6	46.9	12.3	46.8	13.1	46.7	13.4	46.6	13.8	46.5	14.5
		-9.8	-11.0	49.2	12.2	49.1	12.9	48.9	13.6	48.8	13.9	48.8	14.3	48.6	15.0
		-9.5	-10.0	50.4	12.5	50.2	13.2	50.1	13.9	50.0	14.2	49.9	14.6	49.7	15.3
		-8.5	-9.1	51.5	12.7	51.3	13.4	51.1	14.1	51.1	14.4	51.0	14.8	50.8	15.5
		-7.0	-7.6	53.3	13.2	53.2	13.8	53.0	14.5	52.9	14.8	52.9	15.2	52.7	15.8
		-5.0	-5.6	56.0	13.8	55.8	14.4	55.7	15.0	55.6	15.3	55.5	15.6	55.4	16.3
		-3.0	-3.7	58.7	14.3	58.6	14.9	58.4	15.5	58.3	15.8	58.3	16.1	58.1	16.7
		0.0	-0.7	63.4	15.1	63.2	15.7	63.1	16.2	63.0	16.5	62.9	16.7	62.8	17.3
		3.0	2.2	68.3	15.8	68.2	16.3	68.0	16.8	67.9	17.1	67.8	17.4	67.7	17.9
		5.0	4.1	71.8	16.3	71.6	16.8	71.5	17.2	71.4	17.5	71.3	17.7	71.1	18.2
		7.0	6.0	75.4	16.7	75.2	17.2	75.1	17.6	75.0	17.8	74.9	18.1	74.8	18.5
		9.0	7.9	79.2	17.1	79.0	17.5	78.9	18.0	78.8	18.2	78.7	18.4	78.2	18.7
		11.0	9.8	83.2	17.5	83.0	17.9	82.9	18.3	82.8	18.5	82.7	18.7	78.2	17.6
		13.0	11.8	87.6	17.9	87.4	18.3	87.3	18.7	86.8	18.7	83.9	18.0	78.2	16.5
		15.0	13.7	91.9	18.2	91.8	18.6	89.7	18.3	86.8	17.6	83.9	16.9	78.2	15.6
120	660 (73.80)	-19.8	-20.0	40.9	10.7	40.8	11.5	40.6	12.3	40.5	12.7	40.5	13.1	40.3	13.9
		-18.8	-19.0	41.6	10.9	41.5	11.7	41.3	12.5	41.2	12.9	41.2	13.3	41.0	14.1
		-16.7	-17.0	43.2	11.5	43.0	12.2	42.9	13.0	42.8	13.3	42.7	13.7	42.6	14.5
		-13.7	-15.0	44.9	12.0	44.8	12.7	44.6	13.5	44.6	13.8	44.5	14.2	44.3	14.9
		-11.8	-13.0	46.9	12.6	46.7	13.3	46.6	13.9	46.5	14.3	46.4	14.6	46.3	15.3
		-9.8	-11.0	49.0	13.1	48.9	13.8	48.7	14.4	48.7	14.8	48.6	15.1	48.4	15.8
		-9.5	-10.0	50.2	13.4	50.0	14.1	49.9	14.7	49.8	15.0	49.7	15.3	49.6	16.0
		-8.5	-9.1	51.2	13.7	51.1	14.3	50.9	14.9	50.9	15.2	50.8	15.5	50.7	16.2
		-7.0	-7.6	53.1	14.1	53.0	14.7	52.8	15.3	52.8	15.6	52.7	15.9	52.5	16.5
		-5.0	-5.6	55.8	14.6	55.6	15.2	55.5	15.8	55.4	16.0	55.4	16.3	55.2	16.9
		-3.0	-3.7	58.5	15.1	58.4	15.6	58.2	16.2	58.2	16.5	58.1	16.7	57.9	17.3
		0.0	-0.7	63.2	15.8	63.0	16.4	62.9	16.9	62.8	17.1	62.7	17.4	62.6	17.9
		3.0	2.2	68.1	16.5	68.0	17.0	67.8	17.5	67.7	17.7	67.7	17.9	67.5	18.4
		5.0	4.1	71.6	16.9	71.4	17.4	71.3	17.8	71.2	18.0	71.1	18.3	71.0	18.7
		7.0	6.0	75.2	17.3	75.0	17.7	74.9	18.2	74.8	18.4	74.7	18.6	72.2	18.0
		9.0	7.9	79.0	17.7	78.8	18.1	78.7	18.5	78.6	18.7	77.5	18.5	72.2	17.0
		11.0	9.8	83.0	18.0	82.8	18.4	82.7	18.8	80.1	18.1	77.5	17.4	72.2	16.0
		13.0	11.8	87.4	18.4	87.2	18.8	82.8	17.7	80.1	17.0	77.5	16.3	72.2	15.0
		15.0	13.7	91.7	18.7	88.1	18.0	82.8	16.7	80.1	16.0	77.5	15.4	72.2	14.2
110	605 (67.65)	-19.8	-20.0	40.7	11.8	40.6	12.6	40.4	13.3	40.4	13.7	40.3	14.0	40.2	14.8
		-18.8	-19.0	41.4	12.1	41.3	12.8	41.1	13.5	41.1	13.9	41.0	14.2	40.9	14.9
		-16.7	-17.0	43.0	12.6	42.8	13.2	42.7	13.9	42.6	14.3	42.6	14.6	42.4	15.3
		-13.7	-15.0	44.7	13.1	44.6	13.7	44.4	14.4	44.4	14.7	44.3	15.0	44.2	15.7
		-11.8	-13.0	46.7	13.6	46.5	14.2	46.4	14.8	46.3	15.2	46.3	15.5	46.1	16.1
		-9.8	-11.0	48.8	14.1	48.7	14.7	48.5	15.3	48.5	15.6	48.4	15.9	48.3	16.5
		-9.5	-10.0	49.9	14.3	49.8	14.9	49.7	15.5	49.6	15.8	49.5	16.1	49.4	16.7
		-8.5	-9.1	51.0	14.6	50.9	15.2	50.8	15.7	50.7	16.0	50.6	16.3	50.5	16.9
		-7.0	-7.6	52.9	15.0	52.8	15.5	52.6	16.1	52.6	16.3	52.5	16.6	52.4	17.2
		-5.0	-5.6	55.6	15.4	55.4	16.0	55.3	16.5	55.2	16.8	55.2	17.0	55.0	17.6
		-3.0	-3.7	58.3	15.9	58.2	16.4	58.0	16.9	58.0	17.2	57.9	17.4	57.8	17.9
		0.0	-0.7	63.0	16.6	62.8	17.0	62.7	17.5	62.6	17.7	62.6	18.0	62.4	18.4
		3.0	2.2	67.9	17.2	67.8	17.6	67.6	18.1	67.6	18.3	67.5	18.5	66.1	18.4
		5.0	4.1	71.3	17.6	71.2	18.0	71.1	18.4	71.0	18.6	70.9	18.8	66.1	17.3
		7.0	6.0	75.0	17.9	74.8	18.3	74.7	18.7	73.5	18.4	71.0	17.7	66.1	16.3
		9.0	7.9	78.8	18.3	78.6	18.6	75.9	18.0	73.5	17.3	71.0	16.7	66.1	15.3
		11.0	9.8	82.8	18.6	80.8	18.3	75.9	17.0	73.5	16.3	71.0	15.7	66.1	14.4
		13.0	11.8	85.7	18.4	80.8	17.2	75.9	15.9	73.5	15.3	71.0	14.8	66.1	13.6
		15.0	13.7	85.7	17.3	80.8	16.2	75.9	15.0	73.5	14.5	71.0	13.9	66.1	12.9
100	550 (61.50)	-19.8	-20.0	40.5	13.0	40.4	13.7	40.2	14.3	40.2	14.7	40.1	15.0	40.0	15.7
		-18.8	-19.0	41.2	13.2	41.1	13.9	40.9	14.5	40.9	14.8	40.8	15.2	40.7	15.8
		-16.7	-17.0	42.7	13.7	42.6	14.3	42.5	14.9	42.4	15.2	42.4	15.5	42.3	16.2
		-13.7	-15.0	44.5	14.1	44.4	14.7	44.3	15.3	44.2	15.6	44.1	15.9	44.0	16.5
		-11.8	-13.0	46.4	14.6	46.3	15.2	46.2	15.7	46.1	16.0	46.1	16.3	46.0	16.9
		-9.8	-11.0	48.6	15.1	48.5	15.6	48.3	16.1	48.3	16.4	48.2	16.7	48.1	17.2
		-9.5	-10.0	49.7	15.3	49.6	15.8	49.5	16.4	49.4	16.6	49.4	16.9	49.3	17.4
		-8.5	-9.1	50.8	15.5	50.7	16.0	50.6	16.5	50.5	16.8	50.4	17.1	50.3	17.6
		-7.0	-7.6	52.7	15.8	52.6	16.3	52.4	16.8	52.4	17.1	52.3	17.3	52.2	17.9
		-5.0	-5.6	55.4	16.3	55.2	16.8	55.1	17.2	55.1	17.5	55.0	17.7	54.9	18.2
		-3.0	-3.7	58.1	16.7	58.0	17.2	57.8	17.6	57.8	17.8	57.7	18.1	57.6	18.5
		0.0	-0.7	62.8	17.3	62.6	17.7	62.5	18.2	62.4	18.4	62.4	18.6	60.1	18.0
		3.0	2.2	67.7	17.9	67.6	18.3	67.4	18.7	66.8	18.6	64.6	17.9	60.1	16.4
		5.0	4.1	71.1	18.2	71.0	18.6	69.0	18.2	66.8	17.5	64.6	16.8	60.1	15.4
		7.0	6.0	74.8	18.6	73.4	18.4	69.0	17.1	66.8	16.4	64.6	15.8	60.1	14.5
		9.0	7.9	77.9	18.6	73.4	17.3	69.0	16.1	66.8	15.5	64.6	14.9	60.1	13.7
		11.0	9.8	77.9	17.5	73.4	16.3	69.0	15.2	66.8	14.6	64.6	14.0	60.1	13.0
		13.0	11.8	77.9	16.4	73.4	15.3	69.0	14.3	66.8	13.7	64.6	13.2	60.1	12.2
		15.0	13.7	77.9	15.5	73.4	14.5	69.0	13.5	66.8	13.0	64.6	12.5	60.1	11.6

4TW31482-2A

NOTES - ANMERKUNGEN - Σημειώσεις - NOTAS - REMARQUES - NOTE - OPMERKINGEN - примечания - NOTLAR

1 is shown as reference. When selecting the unit models, avoid the Outdoor air temperature range shown by .

dient als Verweis. Vermeiden Sie bei der Auswahl der Gerätemodelle den als markierten Temperaturbereich der Außenluft

Η είναι ενδεικτική. κατά την επιλογή των μοντέλων των μονάδων, αποφύγετε το εύρος θερμοκρασίας εξωτερικού αέρα που υποδεικνύεται

se muestra como referencia. Cuando seleccione los modelos de unidad, evite el intervalo de temperaturas del aire exterior indicado mediante

est montré comme référence.Lors du choix des modèles d'unités, évitez la plage de températures de l'air extérieur illustré par

valori riportati unicamente come riferimento. Nel selezionare i modelli delle unità, non considerare i valori di temperatura dell'aria esterna indicati con il colore

is als referentie getoond. Wanneer modellen van eenheden worden gekozen, vermijd dan het bereik van buitenluchttemperaturen geïllustreerd door

показан как. При выборе модели устройства избегайте внешнюю температуру воздуха, указанную в

referans olarak gösterilmektedir. Ünite modellerini seçerken, belirtilen Dış hava sıcaklığı aralığından kaçının

2 The above table shows the average value of conditions which may occur.

Die obige Tabelle zeigt den Durchschnittswert der Bedingungen, die auftreten können.

Στον παραπάνω πίνακα αναγράφεται η μέση τιμή για συνθήκες που μπορεί να προκύψουν.

La tabla de arriba muestra el valor medio de condiciones que pueden ocurrir.

Le tableau ci-dessus donne la valeur moyenne pour des conditions qui peuvent survenir.

La tabella in alto mostra il valore delle condizioni medie che si possono riscontrare.

De tabel hierboven geeft de gemiddelde waarde aan van situaties die kunnen voorvallen.

Таблица расположенная выше показывает среднее значение условий, которые могут наступить.

Yukarıdaki tablo meydana gelebilecek koşulların ortalama değerini göstermektedir.

4 Capacity tables

4 - 3 Heating capacity tables

REYQ22P8

TC: Total Capacity: kW ; PI: Power Input: kW (compressor + outdoor fan motor)

Combination (%)	Capacity index (kW)	Outdoor air temp.		Indoor air temperature: °CDB											
				16.0		18.0		20.0		21.0		22.0		24.0	
				TC	PI	TC	PI	TC	PI	TC	PI	TC	PI	TC	PI
		°CDB	°CWB	kW	kW	kW	kW	kW	kW	kW	kW	kW	kW	kW	kW
90%	495	-19.8	-20.0	40.3	14.2	40.2	14.8	40.0	15.4	40.0	15.7	39.9	16.0	39.8	16.6
	(55.35)	-18.8	-19.0	41.0	14.4	40.9	14.9	40.8	15.5	40.7	15.8	40.6	16.1	40.5	16.7
		-16.7	-17.0	42.5	14.8	42.4	15.3	42.3	15.9	42.3	16.2	42.2	16.4	42.1	17.0
		-13.7	-15.0	44.3	15.2	44.2	15.7	44.1	16.3	44.0	16.5	44.0	16.8	43.8	17.3
		-11.8	-13.0	46.2	15.6	46.1	16.1	46.0	16.6	46.0	16.9	45.9	17.1	45.8	17.7
		-9.8	-11.0	48.4	16.0	48.3	16.5	48.2	17.0	48.1	17.2	48.0	17.5	47.9	18.0
		-9.5	-10.0	49.5	16.2	49.4	16.7	49.3	17.2	49.3	17.4	49.2	17.7	49.1	18.1
		-8.5	-9.1	50.6	16.4	50.5	16.9	50.4	17.4	50.3	17.6	50.3	17.8	50.2	18.3
		-7.0	-7.6	52.5	16.7	52.4	17.2	52.3	17.6	52.2	17.9	52.1	18.1	52.0	18.5
		-5.0	-5.6	55.2	17.1	55.0	17.6	54.9	18.0	54.9	18.2	54.8	18.4	54.1	18.5
		-3.0	-3.7	57.9	17.5	57.8	17.9	57.7	18.3	57.6	18.5	57.5	18.7	54.1	17.4
		0.0	-0.7	62.5	18.1	62.4	18.4	62.1	18.7	60.1	18.0	58.1	17.3	54.1	15.9
		3.0	2.2	67.5	18.6	66.1	18.4	62.1	17.0	60.1	16.4	58.1	15.7	54.1	14.5
		5.0	4.1	70.1	18.5	66.1	17.3	62.1	16.0	60.1	15.4	58.1	14.8	54.1	13.7
		7.0	6.0	70.1	17.4	66.1	16.2	62.1	15.1	60.1	14.5	58.1	14.0	54.1	12.9
		9.0	7.9	70.1	16.4	66.1	15.3	62.1	14.2	60.1	13.7	58.1	13.2	54.1	12.2
		11.0	9.8	70.1	15.4	66.1	14.4	62.1	13.4	60.1	13.0	58.1	12.5	54.1	11.5
		13.0	11.8	70.1	14.5	66.1	13.6	62.1	12.7	60.1	12.2	58.1	11.8	54.1	10.9
		15.0	13.7	70.1	13.7	66.1	12.8	62.1	12.0	60.1	11.6	58.1	11.1	54.1	10.3
80%	440	-19.8	-20.0	40.1	15.3	40.0	15.9	39.9	16.4	39.8	16.7	39.8	16.9	39.7	17.5
	(49.20)	-18.8	-19.0	40.8	15.5	40.7	16.0	40.6	16.5	40.5	16.8	40.5	17.1	40.4	17.6
		-16.7	-17.0	42.3	15.9	42.2	16.4	42.1	16.9	42.1	17.1	42.0	17.4	41.9	17.9
		-13.7	-15.0	44.1	16.2	44.0	16.7	43.9	17.2	43.8	17.4	43.8	17.7	43.7	18.1
		-11.8	-13.0	46.0	16.6	45.9	17.1	45.8	17.5	45.8	17.7	45.7	18.0	45.6	18.4
		-9.8	-11.0	48.2	17.0	48.1	17.4	48.0	17.9	47.9	18.1	47.9	18.3	47.8	18.7
		-9.5	-10.0	49.3	17.2	49.2	17.6	49.1	18.0	49.1	18.2	49.0	18.4	48.1	18.4
		-8.5	-9.1	50.4	17.3	50.3	17.7	50.2	18.2	50.1	18.4	50.1	18.6	48.1	17.9
		-7.0	-7.6	52.3	17.6	52.2	18.0	52.1	18.4	52.0	18.6	51.7	18.6	48.1	17.1
		-5.0	-5.6	54.9	18.0	54.8	18.3	54.7	18.7	53.4	18.2	51.7	17.5	48.1	16.1
		-3.0	-3.7	57.7	18.3	57.6	18.7	55.2	17.9	53.4	17.2	51.7	16.5	48.1	15.2
		0.0	-0.7	62.3	18.8	58.7	17.5	55.2	16.2	53.4	15.6	51.7	15.0	48.1	13.8
		3.0	2.2	62.3	17.1	58.7	16.0	55.2	14.8	53.4	14.3	51.7	13.7	48.1	12.7
		5.0	4.1	62.3	16.1	58.7	15.0	55.2	14.0	53.4	13.5	51.7	13.0	48.1	12.0
		7.0	6.0	62.3	15.2	58.7	14.2	55.2	13.2	53.4	12.7	51.7	12.2	48.1	11.3
		9.0	7.9	62.3	14.3	58.7	13.4	55.2	12.5	53.4	12.0	51.7	11.6	48.1	10.7
		11.0	9.8	62.3	13.5	58.7	12.6	55.2	11.8	53.4	11.4	51.7	11.0	48.1	10.2
		13.0	11.8	62.3	12.7	58.7	11.9	55.2	11.1	53.4	10.7	51.7	10.4	48.1	9.61
		15.0	13.7	62.3	12.0	58.7	11.3	55.2	10.5	53.4	10.2	51.7	9.82	48.1	9.12
70%	385	-19.8	-20.0	39.8	16.5	39.8	17.0	39.7	17.4	39.6	17.7	39.6	17.9	39.5	18.4
	(43.05)	-18.8	-19.0	40.5	16.6	40.5	17.1	40.4	17.6	40.3	17.8	40.3	18.0	40.2	18.5
		-16.7	-17.0	42.1	17.0	42.0	17.4	41.9	17.8	41.9	18.1	41.8	18.3	41.8	18.7
		-13.7	-15.0	43.9	17.3	43.8	17.7	43.7	18.1	43.6	18.3	43.6	18.5	42.1	18.0
		-11.8	-13.0	45.8	17.6	45.7	18.0	45.6	18.4	45.6	18.6	45.2	18.6	42.1	17.1
		-9.8	-11.0	48.0	17.9	47.9	18.3	47.8	18.7	46.7	18.3	45.2	17.6	42.1	16.1
		-9.5	-10.0	49.1	18.1	49.0	18.5	48.3	18.5	46.7	17.8	45.2	17.1	42.1	15.7
		-8.5	-9.1	50.2	18.2	50.1	18.6	48.3	18.0	46.7	17.3	45.2	16.6	42.1	15.3
		-7.0	-7.6	52.0	18.5	51.4	18.5	48.3	17.2	46.7	16.5	45.2	15.9	42.1	14.6
		-5.0	-5.6	54.5	18.7	51.4	17.4	48.3	16.2	46.7	15.6	45.2	15.0	42.1	13.8
		-3.0	-3.7	54.5	17.6	51.4	16.4	48.3	15.3	46.7	14.7	45.2	14.1	42.1	13.0
		0.0	-0.7	54.5	16.0	51.4	14.9	48.3	13.9	46.7	13.4	45.2	12.9	42.1	11.9
		3.0	2.2	54.5	14.6	51.4	13.7	48.3	12.7	46.7	12.3	45.2	11.8	42.1	10.9
		5.0	4.1	54.5	13.8	51.4	12.9	48.3	12.0	46.7	11.6	45.2	11.2	42.1	10.4
		7.0	6.0	54.5	13.0	51.4	12.2	48.3	11.4	46.7	11.0	45.2	10.6	42.1	9.82
		9.0	7.9	54.5	12.3	51.4	11.5	48.3	10.8	46.7	10.4	45.2	10.0	42.1	9.31
		11.0	9.8	54.5	11.6	51.4	10.9	48.3	10.2	46.7	9.85	45.2	9.51	42.1	8.84
		13.0	11.8	54.5	11.0	51.4	10.3	48.3	9.65	46.7	9.33	45.2	9.01	42.1	8.38
		15.0	13.7	54.5	10.4	51.4	9.77	48.3	9.16	46.7	8.86	45.2	8.56	42.1	7.97
60%	330	-19.8	-20.0	39.6	17.7	39.6	18.1	39.5	18.5	39.4	18.7	38.7	18.4	36.1	16.8
	(36.90)	-18.8	-19.0	40.3	17.8	40.3	18.2	40.2	18.6	40.1	18.7	38.7	18.0	36.1	16.5
		-16.7	-17.0	41.9	18.1	41.8	18.4	41.4	18.6	40.1	17.8	38.7	17.1	36.1	15.7
		-13.7	-15.0	43.6	18.3	43.6	18.7	41.4	17.6	40.1	17.0	38.7	16.3	36.1	15.0
		-11.8	-13.0	45.6	18.6	44.1	18.0	41.4	16.7	40.1	16.1	38.7	15.5	36.1	14.2
		-9.8	-11.0	46.7	18.3	44.1	17.0	41.4	15.8	40.1	15.2	38.7	14.6	36.1	13.5
		-9.5	-10.0	46.7	17.7	44.1	16.5	41.4	15.4	40.1	14.8	38.7	14.2	36.1	13.1
		-8.5	-9.1	46.7	17.3	44.1	16.1	41.4	15.0	40.1	14.4	38.7	13.9	36.1	12.8
		-7.0	-7.6	46.7	16.5	44.1	15.4	41.4	14.3	40.1	13.8	38.7	13.3	36.1	12.3
		-5.0	-5.6	46.7	15.5	44.1	14.5	41.4	13.5	40.1	13.0	38.7	12.5	36.1	11.6
		-3.0	-3.7	46.7	14.7	44.1	13.7	41.4	12.8	40.1	12.3	38.7	11.9	36.1	11.0
		0.0	-0.7	46.7	13.4	44.1	12.5	41.4	11.7	40.1	11.3	38.7	10.9	36.1	10.1
		3.0	2.2	46.7	12.3	44.1	11.5	41.4	10.8	40.1	10.4	38.7	10.0	36.1	9.30
		5.0	4.1	46.7	11.6	44.1	10.9	41.4	10.2	40.1	9.84	38.7	9.50	36.1	8.82
		7.0	6.0	46.7	11.0	44.1	10.3	41.4	9.65	40.1	9.33	38.7	9.01	36.1	8.38
		9.0	7.9	46.7	10.4	44.1	9.77	41.4	9.15	40.1	8.85	38.7	8.55	36.1	7.96
		11.0	9.8	46.7	9.85	44.1	9.26	41.4	8.69	40.1	8.41	38.7	8.13	36.1	7.58
		13.0	11.8	46.7	9.32	44.1	8.77	41.4	8.24	40.1	7.98	38.7	7.71	36.1	7.20
		15.0	13.7	46.7	8.85	44.1	8.34	41.4	7.84	40.1	7.59	38.7	7.35	36.1	6.87
50%	275	-19.8	-20.0	38.9	18.5	36.7	17.2	34.5	16.0	33.4	15.4	32.3	14.8	30.1	13.6
	(30.75)	-18.8	-19.0	38.9	18.1	36.7	16.8	34.5	15.6	33.4	15.1	32.3	14.5	30.1	13.3
		-16.7	-17.0	38.9	17.2	36.7	16.1	34.5	14.9	33.4	14.4	32.3	13.8	30.1	12.8
		-13.7	-15.0	38.9	16.4	36.7	15.3	34.5	14.2	33.4	13.7	32.3	13.2	30.1	12.2
		-11.8	-13.0	38.9	15.6	36.7	14.5	34.5	13.5	33.4	13.0	32.3	12.6	30.1	11.6
		-9.8	-11.0	38.9	14.7	36.7	13.8	34.5	12.8	33.4	12.4	32.3	11.9	30.1	11.0
		-9.5	-10.0	38.9	14.3	36.7	13.4	34.5	12.5	33.4	12.0	32.3	11.6	30.1	10.7
		-8.5	-9.1	38.9	14.0	36.7	13.1	34.5	12.2	33.4	11.7	32.3	11.3	30.1	10.5
		-7.0	-7.6	38.9	13.4	36.7	12.5	34.5	11.7	33.4	11.3	32.3	10.9	30.1	10.1
		-5.0	-5.6	38.9	12.6	36.7	11.8	34.5	11.0	33.4	10.7	32.3	10.3	30.1	9.54
		-3.0	-3.7	38.9	11.9	36.7	11.2	34.5	10.5	33.4	10.1	32.3	9.76	30.1	9.06
		0.0	-0.7	38.9	10.9	36.7	10.3	34.5	9.62	33.4	9.30	32.3	8.99	30.1	8.36
		3.0	2.2	38.9	10.1	36.7	9.47	34.5	8.88	33.4	8.59	32.3	8.30	30.1	7.74
		5.0	4.1	38.9	9.54	36.7	8.98	34.5	8.43	33.4	8.16	32.3	7.89	30.1	7.36
		7.0	6.0	38.9	9.05	36.7	8.53	34.5	8.01	33.4	7.76	32.3	7.51	30.1	7.01
		9.0	7.9	38.9	8.60	36.7	8.10	34.5	7.62	33.4	7.38	32.3	7.15	30.1	6.68
		11.0	9.8	38.9	8.17	36.7	7.71	34.5	7.26	33.4	7.03	32.3	6.81	30.1	6.37
		13.0	11.8	38.9	7.75	36.7	7.32	34.5	6.90	33.4	6.69	32.3	6.48	30.1	6.07
		15.0	13.7	38.9	7.38	36.7	6.98	34.5	6.58	33.4	6.39	32.3	6.19	30.1	5.80

4TW31482-2A

4 Capacity tables

4 - 3 Heating capacity tables

REYQ24P8

TC: Total Capacity: kW ; PI: Power Input: kW (compressor + outdoor fan motor)

Combination (%)	Capacity index (kW)	Outdoor air temp.		Indoor air temperature: °CDB											
				16.0		18.0		20.0		21.0		22.0		24.0	
				TC	PI	TC	PI	TC	PI	TC	PI	TC	PI	TC	PI
		°CDB	°CWB	kW	kW	kW	kW	kW	kW	kW	kW	kW	kW	kW	kW
130	780 (87.10)	-19.8	-20.0	41.5	8.14	41.4	9.09	41.2	10.0	41.1	10.5	41.0	11.0	40.8	11.9
		-18.8	-19.0	42.2	8.44	42.1	9.38	41.9	10.3	41.8	10.8	41.7	11.2	41.6	12.2
		-16.7	-17.0	43.8	9.07	43.6	9.97	43.5	10.9	43.4	11.3	43.3	11.8	43.1	12.7
		-13.7	-15.0	45.6	9.73	45.4	10.6	45.2	11.5	45.1	11.9	45.0	12.3	44.9	13.2
		-11.8	-13.0	47.5	10.4	47.3	11.2	47.2	12.0	47.1	12.5	47.0	12.9	46.8	13.7
		-9.8	-11.0	49.7	11.1	49.5	11.9	49.3	12.6	49.2	13.0	49.2	13.4	49.0	14.2
		-9.5	-10.0	50.8	11.4	50.7	12.2	50.5	12.9	50.4	13.3	50.3	13.7	50.1	14.5
		-8.5	-9.1	51.9	11.7	51.7	12.5	51.6	13.2	51.5	13.6	51.4	14.0	51.2	14.7
		-7.0	-7.6	53.8	12.2	53.6	12.9	53.4	13.6	53.4	14.0	53.3	14.4	53.1	15.1
		-5.0	-5.6	56.5	12.8	56.3	13.5	56.1	14.2	56.1	14.6	56.0	14.9	55.8	15.6
		-3.0	-3.7	59.2	13.4	59.0	14.1	58.9	14.7	58.8	15.1	58.7	15.4	58.5	16.0
		0.0	-0.7	63.9	14.3	63.7	14.9	63.6	15.5	63.5	15.8	63.4	16.1	63.2	16.7
		3.0	2.2	68.8	15.1	68.7	15.7	68.5	16.2	68.4	16.5	68.3	16.8	68.2	17.4
		5.0	4.1	72.3	15.6	72.1	16.1	72.0	16.7	71.9	16.9	71.8	17.2	71.6	17.7
		7.0	6.0	76.0	16.1	75.8	16.6	75.6	17.1	75.5	17.3	75.4	17.6	75.3	18.1
		9.0	7.9	79.8	16.5	79.6	17.0	79.4	17.5	79.4	17.7	79.3	18.0	79.1	18.4
		11.0	9.8	83.8	16.9	83.6	17.4	83.4	17.9	83.4	18.1	83.3	18.3	83.1	18.8
		13.0	11.8	88.2	17.4	88.0	17.8	87.8	18.2	87.8	18.4	87.7	18.7	85.0	18.2
		15.0	13.7	92.6	17.7	92.4	18.1	92.2	18.6	92.1	18.8	91.2	18.7	85.0	17.2
120	720 (80.40)	-19.8	-20.0	41.3	9.43	41.1	10.3	41.0	11.2	40.9	11.6	40.8	12.1	40.7	12.9
		-18.8	-19.0	42.0	9.71	41.8	10.6	41.7	11.4	41.6	11.9	41.5	12.3	41.4	13.2
		-16.7	-17.0	43.6	10.3	43.4	11.1	43.3	11.9	43.2	12.4	43.1	12.8	42.9	13.6
		-13.7	-15.0	45.3	10.9	45.2	11.7	45.0	12.5	44.9	12.9	44.9	13.3	44.7	14.1
		-11.8	-13.0	47.3	11.5	47.1	12.3	47.0	13.0	46.9	13.4	46.8	13.8	46.7	14.6
		-9.8	-11.0	49.4	12.1	49.3	12.9	49.1	13.6	49.0	13.9	49.0	14.3	48.8	15.0
		-9.5	-10.0	50.6	12.4	50.4	13.2	50.3	13.9	50.2	14.2	50.1	14.6	50.0	15.3
		-8.5	-9.1	51.7	12.7	51.5	13.4	51.4	14.1	51.3	14.5	51.2	14.8	51.0	15.5
		-7.0	-7.6	53.6	13.2	53.4	13.8	53.2	14.5	53.2	14.8	53.1	15.2	52.9	15.8
		-5.0	-5.6	56.2	13.8	56.1	14.4	55.9	15.0	55.9	15.4	55.8	15.7	55.6	16.3
		-3.0	-3.7	59.0	14.3	58.8	14.9	58.7	15.5	58.6	15.8	58.5	16.1	58.4	16.7
		0.0	-0.7	63.7	15.1	63.5	15.7	63.4	16.2	63.3	16.5	63.2	16.8	63.0	17.4
		3.0	2.2	68.6	15.9	68.5	16.4	68.3	16.9	68.2	17.2	68.1	17.4	68.0	17.9
		5.0	4.1	72.1	16.3	71.9	16.8	71.8	17.3	71.7	17.6	71.6	17.8	71.5	18.3
		7.0	6.0	75.7	16.8	75.6	17.2	75.4	17.7	75.3	17.9	75.3	18.2	75.1	18.6
		9.0	7.9	79.6	17.2	79.4	17.6	79.2	18.1	79.2	18.3	79.1	18.5	78.4	18.8
		11.0	9.8	83.6	17.6	83.4	18.0	83.2	18.4	83.2	18.6	83.1	18.8	78.4	17.7
		13.0	11.8	88.0	17.9	87.8	18.3	87.6	18.7	87.1	18.8	84.2	18.1	78.4	16.6
		15.0	13.7	92.3	18.3	92.2	18.7	90.0	18.4	87.1	17.7	84.2	17.0	78.4	15.7
110	660 (73.70)	-19.8	-20.0	41.1	10.7	40.9	11.5	40.8	12.3	40.7	12.7	40.6	13.1	40.5	13.9
		-18.8	-19.0	41.8	11.0	41.6	11.8	41.5	12.6	41.4	12.9	41.3	13.3	41.2	14.1
		-16.7	-17.0	43.3	11.5	43.2	12.3	43.0	13.0	43.0	13.4	42.9	13.8	42.8	14.5
		-13.7	-15.0	45.1	12.1	45.0	12.8	44.8	13.5	44.7	13.9	44.7	14.2	44.5	15.0
		-11.8	-13.0	47.1	12.6	46.9	13.3	46.8	14.0	46.7	14.4	46.6	14.7	46.5	15.4
		-9.8	-11.0	49.2	13.2	49.1	13.9	48.9	14.5	48.8	14.9	48.8	15.2	48.6	15.9
		-9.5	-10.0	50.4	13.5	50.2	14.1	50.1	14.8	50.0	15.1	49.9	15.4	49.8	16.1
		-8.5	-9.1	51.4	13.7	51.3	14.4	51.2	15.0	51.1	15.3	51.0	15.6	50.9	16.3
		-7.0	-7.6	53.3	14.1	53.2	14.8	53.0	15.4	53.0	15.7	52.9	16.0	52.7	16.6
		-5.0	-5.6	56.0	14.7	55.9	15.3	55.7	15.9	55.7	16.1	55.6	16.4	55.4	17.0
		-3.0	-3.7	58.8	15.2	58.6	15.7	58.5	16.3	58.4	16.6	58.3	16.9	58.2	17.4
		0.0	-0.7	63.4	15.9	63.3	16.5	63.1	17.0	63.1	17.2	63.0	17.5	62.9	18.0
		3.0	2.2	68.4	16.6	68.2	17.1	68.1	17.6	68.0	17.8	67.9	18.0	67.8	18.5
		5.0	4.1	71.9	17.0	71.7	17.5	71.6	17.9	71.5	18.2	71.4	18.4	71.3	18.8
		7.0	6.0	75.5	17.4	75.4	17.9	75.2	18.3	75.1	18.5	75.1	18.7	71.9	18.0
		9.0	7.9	79.3	17.8	79.2	18.2	79.0	18.6	79.0	18.8	77.2	18.4	71.9	16.9
		11.0	9.8	83.3	18.2	83.2	18.6	82.5	18.8	79.9	18.0	77.2	17.3	71.9	16.0
		13.0	11.8	87.7	18.5	87.6	18.9	82.5	17.6	79.9	17.0	77.2	16.3	71.9	15.0
		15.0	13.7	92.1	18.8	87.8	17.9	82.5	16.6	79.9	16.0	77.2	15.4	71.9	14.2
100	600 (67.00)	-19.8	-20.0	40.8	12.0	40.7	12.7	40.6	13.5	40.5	13.8	40.4	14.2	40.3	14.9
		-18.8	-19.0	41.5	12.2	41.4	13.0	41.3	13.7	41.2	14.0	41.1	14.4	41.0	15.1
		-16.7	-17.0	43.1	12.7	43.0	13.4	42.8	14.1	42.8	14.4	42.7	14.8	42.6	15.5
		-13.7	-15.0	44.9	13.2	44.7	13.9	44.6	14.6	44.5	14.9	44.5	15.2	44.3	15.9
		-11.8	-13.0	46.8	13.7	46.7	14.4	46.6	15.0	46.5	15.3	46.4	15.6	46.3	16.3
		-9.8	-11.0	49.0	14.3	48.8	14.9	48.7	15.5	48.7	15.8	48.6	16.1	48.5	16.7
		-9.5	-10.0	50.1	14.5	50.0	15.1	49.9	15.7	49.8	16.0	49.7	16.3	49.6	16.9
		-8.5	-9.1	51.2	14.7	51.1	15.3	50.9	15.9	50.9	16.2	50.8	16.5	50.7	17.1
		-7.0	-7.6	53.1	15.1	53.0	15.7	52.8	16.2	52.8	16.5	52.7	16.8	52.6	17.4
		-5.0	-5.6	55.8	15.6	55.7	16.1	55.5	16.7	55.5	16.9	55.4	17.2	55.3	17.7
		-3.0	-3.7	58.5	16.1	58.4	16.6	58.3	17.1	58.2	17.3	58.1	17.6	58.0	18.1
		0.0	-0.7	63.2	16.8	63.1	17.2	62.9	17.7	62.9	17.9	62.8	18.2	62.7	18.6
		3.0	2.2	68.2	17.4	68.0	17.8	67.9	18.2	67.8	18.5	67.8	18.7	65.4	18.1
		5.0	4.1	71.6	17.8	71.5	18.2	71.4	18.6	71.3	18.8	70.2	18.6	65.4	17.1
		7.0	6.0	75.3	18.1	75.1	18.5	75.0	18.9	72.6	18.2	70.2	17.5	65.4	16.1
		9.0	7.9	79.1	18.5	79.0	18.8	75.0	17.8	72.6	17.1	70.2	16.5	65.4	15.2
		11.0	9.8	83.1	18.8	79.8	18.0	75.0	16.8	72.6	16.1	70.2	15.5	65.4	14.3
		13.0	11.8	84.6	18.2	79.8	17.0	75.0	15.8	72.6	15.2	70.2	14.6	65.4	13.5
		15.0	13.7	84.6	17.1	79.8	16.0	75.0	14.9	72.6	14.4	70.2	13.8	65.4	12.8

4TW31482-2A

NOTES - ANMERKUNGEN - Σημειώσεις - NOTAS - REMARQUES - NOTE - OPMERKINGEN - примечания - NOTLAR

1 is shown as reference. When selecting the unit models, avoid the Outdoor air temperature range shown by .

dient als Verweis. Vermeiden Sie bei der Auswahl der Gerätemodelle den als markierten Temperaturbereich der Außenluft

Η είναι ενδεικτική. κατά την επιλογή των μοντέλων των μονάδων, αποφύγετε το εύρος θερμοκρασίας εξωτερικού αέρα που υποδεικνύεται

se muestra como referencia. Cuando seleccione los modelos de unidad, evite el intervalo de temperaturas del aire exterior indicado mediante

est montré comme référence.Lors du choix des modèles d'unités, évitez la plage de températures de l'air extérieur illustré par

valori riportati unicamente come riferimento. Nel selezionare i modelli delle unità, non considerare i valori di temperatura dell'aria esterna indicati con il colore

is als referentie getoond. Wanneer modellen van eenheden worden gekozen, vermijd dan het bereik van buitenluchttemperaturen geïllustreerd door

показан как. При выборе модели устройства избегайте внешнюю температуру воздуха, указанную в

referans olarak gösterilmektedir. Ünite modellerini seçerken, belirtilen Dış hava sıcaklığı aralığından kaçının

2 The above table shows the average value of conditions which may occur.

Die obige Tabelle zeigt den Durchschnittswert der Bedingungen, die auftreten können.

Στον παραπάνω πίνακα αναγράφεται η μέση τιμή για συνθήκες που μπορεί να προκύψουν.

La tabla de arriba muestra el valor medio de condiciones que pueden ocurrir.

Le tableau ci-dessus donne la valeur moyenne pour des conditions qui peuvent survenir.

La tabella in alto mostra il valore delle condizioni medie che si possono riscontrare.

De tabel hierboven geeft de gemiddelde waarde aan van situaties die kunnen voorvallen.

Таблица расположенная выше показывает среднее значение условий, которые могут наступить.

Yukarıdaki tablo meydana gelebilecek koşulların ortalama değerini göstermektedir.

4 Capacity tables

4 - 3 Heating capacity tables

REYQ24P8

TC: Total Capacity: kW ; PI: Power Input: kW (compressor + outdoor fan motor)

Combination (%)	Capacity index (kW)	Outdoor air temp.		Indoor air temperature: °CDB											
				16.0		18.0		20.0		21.0		22.0		24.0	
				TC	PI	TC	PI	TC	PI	TC	PI	TC	PI	TC	PI
		°CDB	°CWB	kW	kW	kW	kW	kW	kW	kW	kW	kW	kW	kW	kW
90%	540 (60.30)	-19.8	-20.0	40.6	13.3	40.5	13.9	40.4	14.6	40.3	14.9	40.2	15.3	40.1	15.9
		-18.8	-19.0	41.3	13.5	41.2	14.1	41.1	14.8	41.0	15.1	41.0	15.4	40.8	16.1
		-16.7	-17.0	42.9	13.9	42.8	14.6	42.6	15.2	42.6	15.5	42.5	15.8	42.4	16.4
		-13.7	-15.0	44.6	14.4	44.5	15.0	44.4	15.6	44.3	15.9	44.3	16.2	44.2	16.8
		-11.8	-13.0	46.6	14.9	46.5	15.4	46.4	16.0	46.3	16.3	46.2	16.6	46.1	17.1
		-9.8	-11.0	48.7	15.3	48.6	15.9	48.5	16.4	48.5	16.7	48.4	17.0	48.3	17.5
		-9.5	-10.0	49.9	15.6	49.8	16.1	49.7	16.6	49.6	16.9	49.5	17.1	49.4	17.7
		-8.5	-9.1	51.0	15.8	50.9	16.3	50.7	16.8	50.7	17.1	50.6	17.3	50.5	17.8
		-7.0	-7.6	52.9	16.1	52.7	16.6	52.6	17.1	52.6	17.4	52.5	17.6	52.4	18.1
		-5.0	-5.6	55.6	16.5	55.4	17.0	55.3	17.5	55.3	17.7	55.2	18.0	55.1	18.5
		-3.0	-3.7	58.3	17.0	58.2	17.4	58.1	17.9	58.0	18.1	57.9	18.3	57.8	18.8
		0.0	-0.7	63.0	17.6	62.9	18.0	62.7	18.4	62.7	18.6	62.6	18.8	58.8	17.5
		3.0	2.2	67.9	18.1	67.8	18.5	67.5	18.8	65.3	18.1	63.2	17.4	58.8	16.0
		5.0	4.1	71.4	18.5	71.3	18.8	67.5	17.7	65.3	17.1	63.2	16.4	58.8	15.1
		7.0	6.0	75.0	18.8	71.8	18.0	67.5	16.7	65.3	16.1	63.2	15.5	58.8	14.3
		9.0	7.9	76.2	18.1	71.8	16.9	67.5	15.7	65.3	15.2	63.2	14.6	58.8	13.5
		11.0	9.8	76.2	17.1	71.8	16.0	67.5	14.9	65.3	14.3	63.2	13.8	58.8	12.7
		13.0	11.8	76.2	16.1	71.8	15.0	67.5	14.0	65.3	13.5	63.2	13.0	58.8	12.0
		15.0	13.7	76.2	15.2	71.8	14.2	67.5	13.2	65.3	12.8	63.2	12.3	58.8	11.4
80%	480 (53.60)	-19.8	-20.0	40.4	14.6	40.3	15.2	40.2	15.7	40.1	16.0	40.1	16.3	39.9	16.9
		-18.8	-19.0	41.1	14.8	41.0	15.3	40.9	15.9	40.8	16.2	40.8	16.5	40.7	17.1
		-16.7	-17.0	42.6	15.1	42.5	15.7	42.4	16.3	42.4	16.5	42.3	16.8	42.2	17.4
		-13.7	-15.0	44.4	15.6	44.3	16.1	44.2	16.6	44.1	16.9	44.1	17.1	44.0	17.7
		-11.8	-13.0	46.4	16.0	46.3	16.5	46.2	17.0	46.1	17.2	46.0	17.5	45.9	18.0
		-9.8	-11.0	48.5	16.4	48.4	16.9	48.3	17.4	48.3	17.6	48.2	17.8	48.1	18.3
		-9.5	-10.0	49.7	16.6	49.6	17.1	49.5	17.5	49.4	17.8	49.4	18.0	49.2	18.5
		-8.5	-9.1	50.7	16.8	50.6	17.2	50.5	17.7	50.5	17.9	50.4	18.2	50.3	18.6
		-7.0	-7.6	52.6	17.1	52.5	17.5	52.4	18.0	52.4	18.2	52.3	18.4	52.2	18.9
		-5.0	-5.6	55.3	17.5	55.2	17.9	55.1	18.3	55.1	18.5	55.0	18.7	52.3	17.8
		-3.0	-3.7	58.1	17.8	58.0	18.2	57.8	18.6	57.8	18.8	56.1	18.2	52.3	16.8
		0.0	-0.7	62.7	18.4	62.6	18.8	60.0	18.0	58.1	17.3	56.1	16.6	52.3	15.3
		3.0	2.2	67.7	18.9	63.9	17.6	60.0	16.4	58.1	15.8	56.1	15.2	52.3	14.0
		5.0	4.1	67.7	17.8	63.9	16.6	60.0	15.5	58.1	14.9	56.1	14.3	52.3	13.2
		7.0	6.0	67.7	16.8	63.9	15.7	60.0	14.6	58.1	14.1	56.1	13.5	52.3	12.5
		9.0	7.9	67.7	15.8	63.9	14.8	60.0	13.8	58.1	13.3	56.1	12.8	52.3	11.8
		11.0	9.8	67.7	14.9	63.9	14.0	60.0	13.0	58.1	12.6	56.1	12.1	52.3	11.2
		13.0	11.8	67.7	14.0	63.9	13.2	60.0	12.3	58.1	11.9	56.1	11.4	52.3	10.6
		15.0	13.7	67.7	13.3	63.9	12.5	60.0	11.7	58.1	11.3	56.1	10.9	52.3	10.1
70%	420 (46.90)	-19.8	-20.0	40.1	15.9	40.0	16.4	40.0	16.9	39.9	17.1	39.9	17.4	39.8	17.9
		-18.8	-19.0	40.8	16.0	40.8	16.5	40.7	17.0	40.6	17.3	40.6	17.5	40.5	18.0
		-16.7	-17.0	42.4	16.4	42.3	16.8	42.2	17.3	42.2	17.6	42.1	17.8	42.0	18.3
		-13.7	-15.0	44.2	16.7	44.1	17.2	44.0	17.6	43.9	17.9	43.9	18.1	43.8	18.6
		-11.8	-13.0	46.1	17.1	46.0	17.5	45.9	18.0	45.9	18.2	45.9	18.4	45.8	18.9
		-9.8	-11.0	48.3	17.4	48.2	17.9	48.1	18.3	48.1	18.5	48.0	18.7	45.8	17.8
		-9.5	-10.0	49.4	17.6	49.3	18.0	49.3	18.5	49.2	18.7	49.1	18.8	45.8	17.3
		-8.5	-9.1	50.5	17.8	50.4	18.2	50.3	18.6	50.3	18.8	49.1	18.4	45.8	16.9
		-7.0	-7.6	52.4	18.1	52.3	18.4	52.2	18.8	50.8	18.3	49.1	17.6	45.8	16.2
		-5.0	-5.6	55.1	18.4	55.0	18.8	52.5	17.9	50.8	17.2	49.1	16.5	45.8	15.2
		-3.0	-3.7	57.8	18.7	55.9	18.1	52.5	16.9	50.8	16.2	49.1	15.6	45.8	14.4
		0.0	-0.7	59.2	17.7	55.9	16.5	52.5	15.4	50.8	14.8	49.1	14.3	45.8	13.2
		3.0	2.2	59.2	16.2	55.9	15.1	52.5	14.1	50.8	13.6	49.1	13.1	45.8	12.1
		5.0	4.1	59.2	15.2	55.9	14.3	52.5	13.3	50.8	12.8	49.1	12.4	45.8	11.5
		7.0	6.0	59.2	14.4	55.9	13.5	52.5	12.6	50.8	12.1	49.1	11.7	45.8	10.9
		9.0	7.9	59.2	13.6	55.9	12.7	52.5	11.9	50.8	11.5	49.1	11.1	45.8	10.3
		11.0	9.8	59.2	12.8	55.9	12.1	52.5	11.3	50.8	10.9	49.1	10.5	45.8	9.77
		13.0	11.8	59.2	12.1	55.9	11.4	52.5	10.7	50.8	10.3	49.1	9.95	45.8	9.26
		15.0	13.7	59.2	11.5	55.9	10.8	52.5	10.1	50.8	9.79	49.1	9.46	45.8	8.81
60%	360 (40.20)	-19.8	-20.0	39.9	17.1	39.8	17.6	39.7	18.0	39.7	18.2	39.7	18.5	39.2	18.6
		-18.8	-19.0	40.6	17.3	40.5	17.7	40.5	18.1	40.4	18.4	40.4	18.6	39.2	18.2
		-16.7	-17.0	42.2	17.6	42.1	18.0	42.0	18.4	42.0	18.6	41.9	18.8	39.2	17.4
		-13.7	-15.0	43.9	17.9	43.9	18.3	43.8	18.7	43.6	18.8	42.1	18.0	39.2	16.6
		-11.8	-13.0	45.9	18.2	45.8	18.6	45.0	18.5	43.6	17.8	42.1	17.1	39.2	15.7
		-9.8	-11.0	48.1	18.5	47.9	18.8	45.0	17.5	43.6	16.8	42.1	16.2	39.2	14.9
		-9.5	-10.0	49.2	18.7	47.9	18.3	45.0	17.0	43.6	16.4	42.1	15.7	39.2	14.5
		-8.5	-9.1	50.3	18.8	47.9	17.8	45.0	16.6	43.6	15.9	42.1	15.3	39.2	14.1
		-7.0	-7.6	50.8	18.3	47.9	17.0	45.0	15.9	43.6	15.3	42.1	14.7	39.2	13.6
		-5.0	-5.6	50.8	17.2	47.9	16.1	45.0	14.9	43.6	14.4	42.1	13.9	39.2	12.8
		-3.0	-3.7	50.8	16.2	47.9	15.2	45.0	14.1	43.6	13.6	42.1	13.1	39.2	12.1
		0.0	-0.7	50.8	14.8	47.9	13.9	45.0	12.9	43.6	12.5	42.1	12.0	39.2	11.2
		3.0	2.2	50.8	13.6	47.9	12.7	45.0	11.9	43.6	11.5	42.1	11.1	39.2	10.3
		5.0	4.1	50.8	12.8	47.9	12.0	45.0	11.3	43.6	10.9	42.1	10.5	39.2	9.75
		7.0	6.0	50.8	12.1	47.9	11.4	45.0	10.7	43.6	10.3	42.1	9.96	39.2	9.26
		9.0	7.9	50.8	11.5	47.9	10.8	45.0	10.1	43.6	9.78	42.1	9.45	39.2	8.80
		11.0	9.8	50.8	10.9	47.9	10.2	45.0	9.61	43.6	9.29	42.1	8.98	39.2	8.38
		13.0	11.8	50.8	10.3	47.9	9.70	45.0	9.11	43.6	8.82	42.1	8.53	39.2	7.96
		15.0	13.7	50.8	9.79	47.9	9.22	45.0	8.67	43.6	8.39	42.1	8.12	39.2	7.59
50%	300 (33.50)	-19.8	-20.0	39.7	18.4	39.6	18.8	37.5	17.7	36.3	17.0	35.1	16.3	32.7	15.1
		-18.8	-19.0	40.4	18.5	39.9	18.6	37.5	17.3	36.3	16.6	35.1	16.0	32.7	14.8
		-16.7	-17.0	41.9	18.8	39.9	17.8	37.5	16.5	36.3	15.9	35.1	15.3	32.7	14.1
		-13.7	-15.0	42.3	18.1	39.9	16.9	37.5	15.7	36.3	15.2	35.1	14.6	32.7	13.5
		-11.8	-13.0	42.3	17.2	39.9	16.1	37.5	15.0	36.3	14.4	35.1	13.9	32.7	12.8
		-9.8	-11.0	42.3	16.3	39.9	15.2	37.5	14.2	36.3	13.7	35.1	13.2	32.7	12.2
		-9.5	-10.0	42.3	15.8	39.9	14.8	37.5	13.8	36.3	13.3	35.1	12.8	32.7	11.9
		-8.5	-9.1	42.3	15.4	39.9	14.4	37.5	13.5	36.3	13.0	35.1	12.5	32.7	11.6
		-7.0	-7.6	42.3	14.8	39.9	13.8	37.5	12.9	36.3	12.5	35.1	12.0	32.7	11.1
		-5.0	-5.6	42.3	13.9	39.9	13.1	37.5	12.2	36.3	11.8	35.1	11.4	32.7	10.5
		-3.0	-3.7	42.3	13.2	39.9	12.4	37.5	11.6	36.3	11.2	35.1	10.8	32.7	10.0
		0.0	-0.7	42.3	12.1	39.9	11.4	37.5	10.6	36.3	10.3	35.1	9.93	32.7	9.24
		3.0	2.2	42.3	11.1	39.9	10.5	37.5	9.82	36.3	9.49	35.1	9.18	32.7	8.55
		5.0	4.1	42.3	10.6	39.9	9.93	37.5	9.32	36.3	9.02	35.1	8.72	32.7	8.14
		7.0	6.0	42.3	10.0	39.9	9.43	37.5	8.86	36.3	8.57	35.1	8.30	32.7	7.75
		9.0	7.9	42.3	9.50	39.9	8.96	37.5	8.42	36.3	8.16	35.1	7.90	32.7	7.38
		11.0	9.8	42.3	9.03	39.9	8.52	37.5	8.02	36.3	7.77	35.1	7.53	32.7	7.04
		13.0	11.8	42.3	8.57	39.9	8.09	37.5	7.62	36.3	7.39	35.1	7.16	32.7	6.71
		15.0	13.7	42.3	8.16	39.9	7.72	37.5	7.28	36.3	7.06	35.1	6.84	32.7	6.42

4TW31482-2A

4 Capacity tables

4 - 3 Heating capacity tables

REYQ26P8

TC: Total Capacity: kW ; PI: Power Input: kW (compressor + outdoor fan motor)

Combination (%)	Capacity index (kW)	Outdoor air temp.		Indoor air temperature: °CDB											
				16.0		18.0		20.0		21.0		22.0		24.0	
				TC	PI	TC	PI	TC	PI	TC	PI	TC	PI	TC	PI
		°CDB	°CWB	kW	kW	kW	kW	kW	kW	kW	kW	kW	kW	kW	kW
130	845 (94.90)	-19.8	-20.0	51.0	13.3	50.8	14.3	50.7	15.4	50.6	15.9	50.5	16.4	50.3	17.4
		-18.8	-19.0	51.9	13.6	51.7	14.7	51.6	15.7	51.5	16.2	51.4	16.7	51.2	17.7
		-16.7	-17.0	53.9	14.3	53.7	15.3	53.5	16.3	53.4	16.8	53.4	17.3	53.2	18.2
		-13.7	-15.0	56.1	15.1	55.9	16.0	55.7	16.9	55.7	17.4	55.6	17.9	55.4	18.8
		-11.8	-13.0	58.6	15.8	58.4	16.7	58.2	17.6	58.1	18.0	58.0	18.5	57.8	19.4
		-9.8	-11.0	61.2	16.5	61.1	17.4	60.9	18.2	60.8	18.6	60.7	19.1	60.5	19.9
		-9.5	-10.0	62.7	16.9	62.5	17.7	62.3	18.5	62.2	19.0	62.1	19.4	61.9	20.2
		-8.5	-9.1	64.0	17.2	63.8	18.0	63.6	18.8	63.5	19.2	63.4	19.6	63.3	20.5
		-7.0	-7.6	66.3	17.7	66.1	18.5	66.0	19.3	65.9	19.7	65.8	20.1	65.6	20.9
		-5.0	-5.6	69.6	18.4	69.5	19.2	69.3	19.9	69.2	20.3	69.1	20.7	68.9	21.4
		-3.0	-3.7	73.0	19.1	72.8	19.8	72.6	20.5	72.5	20.8	72.4	21.2	72.2	21.9
		0.0	-0.7	78.7	20.0	78.5	20.7	78.3	21.3	78.3	21.6	78.2	22.0	78.0	22.6
		3.0	2.2	84.8	20.9	84.6	21.5	84.4	22.1	84.3	22.4	84.2	22.7	84.0	23.3
		5.0	4.1	89.0	21.4	88.8	22.0	88.6	22.6	88.5	22.8	88.4	23.1	88.2	23.7
		7.0	6.0	93.4	21.9	93.2	22.5	93.0	23.0	92.9	23.3	92.8	23.6	92.3	24.0
		9.0	7.9	98.0	22.4	97.9	22.9	97.7	23.4	97.6	23.7	97.5	24.0	92.3	22.5
		11.0	9.8	103	22.8	103	23.3	103	23.8	102	24.1	99.1	23.1	92.3	21.2
		13.0	11.8	108	23.3	108	23.8	106	23.6	103	22.6	99.1	21.7	92.3	20.0
		15.0	13.7	114	23.7	113	23.9	106	22.2	103	21.3	99.1	20.5	92.3	18.8
120	780 (87.60)	-19.8	-20.0	50.8	14.7	50.6	15.6	50.4	16.6	50.3	17.1	50.3	17.6	50.1	18.5
		-18.8	-19.0	51.7	15.0	51.5	15.9	51.3	16.9	51.2	17.3	51.2	17.8	51.0	18.8
		-16.7	-17.0	53.7	15.7	53.5	16.6	53.3	17.5	53.2	17.9	53.1	18.4	53.0	19.3
		-13.7	-15.0	55.9	16.3	55.7	17.2	55.5	18.0	55.4	18.5	55.4	18.9	55.2	19.8
		-11.8	-13.0	58.3	17.0	58.1	17.8	58.0	18.6	57.9	19.1	57.8	19.5	57.6	20.3
		-9.8	-11.0	61.0	17.7	60.8	18.5	60.6	19.2	60.6	19.6	60.5	20.0	60.3	20.8
		-9.5	-10.0	62.4	18.0	62.2	18.8	62.1	19.5	62.0	19.9	61.9	20.3	61.7	21.1
		-8.5	-9.1	63.8	18.3	63.6	19.1	63.4	19.8	63.3	20.2	63.2	20.6	63.1	21.3
		-7.0	-7.6	66.1	18.8	65.9	19.5	65.7	20.2	65.6	20.6	65.6	21.0	65.4	21.7
		-5.0	-5.6	69.4	19.4	69.2	20.1	69.0	20.8	69.0	21.1	68.9	21.5	68.7	22.2
		-3.0	-3.7	72.7	20.0	72.6	20.7	72.4	21.3	72.3	21.7	72.2	22.0	72.1	22.6
		0.0	-0.7	78.5	20.9	78.3	21.5	78.1	22.1	78.0	22.4	78.0	22.7	77.8	23.3
		3.0	2.2	84.5	21.7	84.3	22.3	84.2	22.8	84.1	23.1	84.0	23.4	83.8	23.9
		5.0	4.1	88.7	22.2	88.6	22.7	88.4	23.2	88.3	23.5	88.2	23.8	85.2	23.1
		7.0	6.0	93.2	22.6	93.0	23.2	92.8	23.7	92.7	23.9	91.5	23.7	85.2	21.7
		9.0	7.9	97.8	23.1	97.6	23.6	97.5	24.1	94.7	23.2	91.5	22.3	85.2	20.5
		11.0	9.8	103	23.5	102	24.0	97.8	22.8	94.7	21.9	91.5	21.0	85.2	19.3
		13.0	11.8	108	23.9	104	23.0	97.8	21.4	94.7	20.6	91.5	19.7	85.2	18.2
		15.0	13.7	110	23.3	104	21.7	97.8	20.2	94.7	19.4	91.5	18.6	85.2	17.2
110	715 (80.30)	-19.8	-20.0	50.5	16.1	50.4	17.0	50.2	17.8	50.1	18.3	50.1	18.7	49.9	19.6
		-18.8	-19.0	51.4	16.4	51.3	17.2	51.1	18.1	51.0	18.5	51.0	19.0	50.8	19.8
		-16.7	-17.0	53.4	17.0	53.2	17.8	53.1	18.6	53.0	19.0	52.9	19.4	52.8	20.3
		-13.7	-15.0	55.6	17.6	55.5	18.4	55.3	19.2	55.2	19.6	55.1	20.0	55.0	20.7
		-11.8	-13.0	58.1	18.2	57.9	19.0	57.7	19.7	57.7	20.1	57.6	20.5	57.4	21.2
		-9.8	-11.0	60.7	18.8	60.6	19.5	60.4	20.3	60.3	20.6	60.3	21.0	60.1	21.7
		-9.5	-10.0	62.2	19.1	62.0	19.8	61.9	20.5	61.8	20.9	61.7	21.2	61.5	21.9
		-8.5	-9.1	63.5	19.4	63.3	20.1	63.2	20.8	63.1	21.1	63.0	21.5	62.9	22.2
		-7.0	-7.6	65.8	19.8	65.7	20.5	65.5	21.2	65.4	21.5	65.4	21.8	65.2	22.5
		-5.0	-5.6	69.1	20.4	69.0	21.1	68.8	21.7	68.7	22.0	68.7	22.3	68.5	23.0
		-3.0	-3.7	72.5	21.0	72.3	21.6	72.2	22.2	72.1	22.5	72.0	22.8	71.9	23.4
		0.0	-0.7	78.2	21.8	78.1	22.3	77.9	22.9	77.8	23.2	77.7	23.4	77.6	24.0
		3.0	2.2	84.3	22.5	84.1	23.0	83.9	23.5	83.9	23.8	83.8	24.1	78.1	22.1
		5.0	4.1	88.5	23.0	88.3	23.5	88.2	23.9	86.8	23.6	83.9	22.7	78.1	20.8
		7.0	6.0	92.9	23.4	92.7	23.9	89.7	23.1	86.8	22.2	83.9	21.3	78.1	19.6
		9.0	7.9	97.5	23.8	95.4	23.5	89.7	21.8	86.8	20.9	83.9	20.1	78.1	18.5
		11.0	9.8	101	23.7	95.4	22.1	89.7	20.5	86.8	19.7	83.9	18.9	78.1	17.4
		13.0	11.8	101	22.3	95.4	20.7	89.7	19.3	86.8	18.5	83.9	17.8	78.1	16.4
		15.0	13.7	101	21.0	95.4	19.6	89.7	18.2	86.8	17.5	83.9	16.9	78.1	15.5
100	650 (73.00)	-19.8	-20.0	50.3	17.5	50.1	18.3	50.0	19.1	49.9	19.5	49.8	19.9	49.7	20.7
		-18.8	-19.0	51.2	17.7	51.0	18.5	50.9	19.3	50.8	19.7	50.7	20.1	50.6	20.9
		-16.7	-17.0	53.2	18.3	53.0	19.0	52.9	19.8	52.8	20.2	52.7	20.5	52.6	21.3
		-13.7	-15.0	55.4	18.8	55.2	19.6	55.1	20.3	55.0	20.6	54.9	21.0	54.8	21.7
		-11.8	-13.0	57.8	19.4	57.7	20.1	57.5	20.8	57.5	21.1	57.4	21.5	57.2	22.2
		-9.8	-11.0	60.5	20.0	60.3	20.6	60.2	21.3	60.1	21.6	60.1	21.9	59.9	22.6
		-9.5	-10.0	61.9	20.3	61.8	20.9	61.6	21.5	61.6	21.9	61.5	22.2	61.3	22.8
		-8.5	-9.1	63.2	20.5	63.1	21.1	63.0	21.8	62.9	22.1	62.8	22.4	62.7	23.0
		-7.0	-7.6	65.6	20.9	65.4	21.5	65.3	22.1	65.2	22.4	65.1	22.7	65.0	23.3
		-5.0	-5.6	68.9	21.4	68.7	22.0	68.6	22.6	68.5	22.9	68.5	23.2	68.3	23.7
		-3.0	-3.7	72.2	21.9	72.1	22.5	72.0	23.0	71.9	23.3	71.8	23.6	71.0	23.8
		0.0	-0.7	78.0	22.7	77.8	23.2	77.7	23.7	77.6	23.9	76.3	23.6	71.0	21.6
		3.0	2.2	84.0	23.3	83.9	23.8	81.5	23.3	78.9	22.4	76.3	21.5	71.0	19.7
		5.0	4.1	88.2	23.7	86.7	23.6	81.5	21.9	78.9	21.0	76.3	20.2	71.0	18.6
		7.0	6.0	92.0	23.9	86.7	22.2	81.5	20.6	78.9	19.8	76.3	19.0	71.0	17.5
		9.0	7.9	92.0	22.4	86.7	20.9	81.5	19.4	78.9	18.7	76.3	18.0	71.0	16.5
		11.0	9.8	92.0	21.1	86.7	19.7	81.5	18.3	78.9	17.6	76.3	17.0	71.0	15.6
		13.0	11.8	92.0	19.9	86.7	18.5	81.5	17.2	78.9	16.6	76.3	16.0	71.0	14.8
		15.0	13.7	92.0	18.7	86.7	17.5	81.5	16.3	78.9	15.7	76.3	15.1	71.0	14.0

4TW31482-2A

NOTES - ANMERKUNGEN - Σημειώσεις - NOTAS - REMARQUES - NOTE - OPMERKINGEN - примечания - NOTLAR

1 is shown as reference. When selecting the unit models, avoid the Outdoor air temperature range shown by .

dient als Verweis. Vermeiden Sie bei der Auswahl der Gerätemodelle den als markierten Temperaturbereich der Außenluft

Η είναι ενδεικτική. κατά την επιλογή των μοντέλων των μονάδων, αποφύγετε το εύρος θερμοκρασίας εξωτερικού αέρα που υποδεικνύεται

se muestra como referencia. Cuando seleccione los modelos de unidad, evite el intervalo de temperaturas del aire exterior indicado mediante

est montré comme référence.Lors du choix des modèles d'unités, évitez la plage de températures de l'air extérieur illustré par

valori riportati unicamente come riferimento. Nel selezionare i modelli delle unità, non considerare i valori di temperatura dell'aria esterna indicati con il colore

is als referentie getoond. Wanneer modellen van eenheden worden gekozen, vermijd dan het bereik van buitenluchttemperaturen geïllustreerd door

показан как. При выборе модели устройства избегайте внешнюю температуру воздуха, указанную в

referans olarak gösterilmektedir. Ünite modellerini seçerken, belirtilen Dış hava sıcaklığı aralığından kaçının

2 The above table shows the average value of conditions which may occur.

Die obige Tabelle zeigt den Durchschnittswert der Bedingungen, die auftreten können.

Στον παραπάνω πίνακα αναγράφεται η μέση τιμή για συνθήκες που μπορεί να προκύψουν.

La tabla de arriba muestra el valor medio de condiciones que pueden ocurrir.

Le tableau ci-dessus donne la valeur moyenne pour des conditions qui peuvent survenir.

La tabella in alto mostra il valore delle condizioni medie che si possono riscontrare.

De tabel hierboven geeft de gemiddelde waarde aan van situaties die kunnen voorvallen.

Таблица расположенная выше показывает среднее значение условий, которые могут наступить.

Yukarıdaki tablo meydana gelebilecek koşulların ortalama değerini göstermektedir.

4 Capacity tables

4 - 3 Heating capacity tables

REYQ26P8

TC: Total Capacity: kW ; PI: Power Input: kW (compressor + outdoor fan motor)

Combination (%)	Capacity index (kW)	Outdoor air temp.		Indoor air temperature: °CDB											
				16.0		18.0		20.0		21.0		22.0		24.0	
				TC	PI	TC	PI	TC	PI	TC	PI	TC	PI	TC	PI
		°CDB	°CWB	kW	kW	kW	kW	kW	kW	kW	kW	kW	kW	kW	kW
90%	585 (65.70)	-19.8	-20.0	50.0	18.9	49.9	19.6	49.8	20.3	49.7	20.7	49.6	21.0	49.5	21.7
		-18.8	-19.0	50.9	19.1	50.8	19.8	50.7	20.5	50.6	20.9	50.5	21.2	50.4	21.9
		-16.7	-17.0	52.9	19.6	52.8	20.3	52.6	21.0	52.6	21.3	52.5	21.6	52.4	22.3
		-13.7	-15.0	55.1	20.1	55.0	20.8	54.9	21.4	54.8	21.7	54.7	22.0	54.6	22.7
		-11.8	-13.0	57.6	20.6	57.4	21.2	57.3	21.9	57.2	22.2	57.2	22.5	57.0	23.1
		-9.8	-11.0	60.2	21.1	60.1	21.7	60.0	22.3	59.9	22.6	59.8	22.9	59.7	23.5
		-9.5	-10.0	61.7	21.4	61.5	22.0	61.4	22.5	61.3	22.8	61.3	23.1	61.1	23.7
		-8.5	-9.1	63.0	21.6	62.9	22.2	62.7	22.7	62.7	23.0	62.6	23.3	62.5	23.9
		-7.0	-7.6	65.3	22.0	65.2	22.5	65.1	23.1	65.0	23.3	64.9	23.6	63.9	23.6
		-5.0	-5.6	68.6	22.4	68.5	23.0	68.4	23.5	68.3	23.7	68.2	24.0	63.9	22.2
		-3.0	-3.7	72.0	22.9	71.9	23.4	71.7	23.9	71.0	23.8	68.6	22.8	63.9	20.9
		0.0	-0.7	77.7	23.6	77.6	24.0	73.4	22.5	71.0	21.6	68.6	20.7	63.9	19.1
		3.0	2.2	82.8	23.7	78.1	22.1	73.4	20.5	71.0	19.7	68.6	18.9	63.9	17.4
		5.0	4.1	82.8	22.3	78.1	20.8	73.4	19.3	71.0	18.6	68.6	17.9	63.9	16.5
		7.0	6.0	82.8	21.0	78.1	19.6	73.4	18.2	71.0	17.5	68.6	16.9	63.9	15.5
		9.0	7.9	82.8	19.8	78.1	18.5	73.4	17.2	71.0	16.5	68.6	15.9	63.9	14.7
		11.0	9.8	82.8	18.6	78.1	17.4	73.4	16.2	71.0	15.6	68.6	15.1	63.9	13.9
		13.0	11.8	82.8	17.6	78.1	16.4	73.4	15.3	71.0	14.8	68.6	14.2	63.9	13.2
		15.0	13.7	82.8	16.6	78.1	15.5	73.4	14.5	71.0	14.0	68.6	13.5	63.9	12.5
80%	520 (58.40)	-19.8	-20.0	49.8	20.3	49.7	20.9	49.5	21.6	49.5	21.9	49.4	22.2	49.3	22.8
		-18.8	-19.0	50.7	20.5	50.6	21.1	50.4	21.7	50.4	22.1	50.3	22.4	50.2	23.0
		-16.7	-17.0	52.7	20.9	52.5	21.5	52.4	22.1	52.4	22.4	52.3	22.7	52.2	23.3
		-13.7	-15.0	54.9	21.4	54.7	21.9	54.6	22.5	54.6	22.8	54.5	23.1	54.4	23.7
		-11.8	-13.0	57.3	21.8	57.2	22.4	57.1	22.9	57.0	23.2	57.0	23.5	56.8	24.0
		-9.8	-11.0	60.0	22.3	59.9	22.8	59.8	23.3	59.7	23.6	59.6	23.8	56.8	22.7
		-9.5	-10.0	61.4	22.5	61.3	23.0	61.2	23.5	61.1	23.8	61.0	24.0	56.8	22.0
		-8.5	-9.1	62.7	22.7	62.6	23.2	62.5	23.7	62.5	24.0	61.0	23.4	56.8	21.4
		-7.0	-7.6	65.1	23.0	65.0	23.5	64.8	24.0	63.1	23.3	61.0	22.3	56.8	20.5
		-5.0	-5.6	68.4	23.5	68.3	23.9	65.2	22.7	63.1	21.9	61.0	21.0	56.8	19.3
		-3.0	-3.7	71.7	23.8	69.4	23.1	65.2	21.4	63.1	20.6	61.0	19.8	56.8	18.2
		0.0	-0.7	73.6	22.5	69.4	21.0	65.2	19.5	63.1	18.8	61.0	18.0	56.8	16.6
		3.0	2.2	73.6	20.6	69.4	19.2	65.2	17.8	63.1	17.2	61.0	16.5	56.8	15.2
		5.0	4.1	73.6	19.4	69.4	18.1	65.2	16.8	63.1	16.2	61.0	15.6	56.8	14.4
		7.0	6.0	73.6	18.3	69.4	17.1	65.2	15.9	63.1	15.3	61.0	14.8	56.8	13.6
		9.0	7.9	73.6	17.2	69.4	16.1	65.2	15.0	63.1	14.5	61.0	14.0	56.8	12.9
		11.0	9.8	73.6	16.3	69.4	15.2	65.2	14.2	63.1	13.7	61.0	13.2	56.8	12.3
		13.0	11.8	73.6	15.4	69.4	14.4	65.2	13.4	63.1	13.0	61.0	12.5	56.8	11.6
		15.0	13.7	73.6	14.5	69.4	13.6	65.2	12.7	63.1	12.3	61.0	11.9	56.8	11.0
70%	455 (51.10)	-19.8	-20.0	49.5	21.7	49.4	22.2	49.3	22.8	49.3	23.1	49.2	23.3	49.1	23.9
		-18.8	-19.0	50.4	21.9	50.3	22.4	50.2	23.0	50.2	23.2	50.1	23.5	49.7	23.8
		-16.7	-17.0	52.4	22.2	52.3	22.8	52.2	23.3	52.1	23.6	52.1	23.8	49.7	22.7
		-13.7	-15.0	54.6	22.6	54.5	23.1	54.4	23.6	54.4	23.9	53.4	23.5	49.7	21.5
		-11.8	-13.0	57.1	23.0	57.0	23.5	56.9	24.0	55.2	23.2	53.4	22.2	49.7	20.4
		-9.8	-11.0	59.7	23.4	59.6	23.9	57.1	22.8	55.2	21.9	53.4	21.0	49.7	19.3
		-9.5	-10.0	61.2	23.6	60.7	23.9	57.1	22.1	55.2	21.3	53.4	20.4	49.7	18.8
		-8.5	-9.1	62.5	23.8	60.7	23.2	57.1	21.5	55.2	20.7	53.4	19.9	49.7	18.3
		-7.0	-7.6	64.4	23.8	60.7	22.2	57.1	20.6	55.2	19.8	53.4	19.0	49.7	17.5
		-5.0	-5.6	64.4	22.4	60.7	20.9	57.1	19.4	55.2	18.6	53.4	17.9	49.7	16.5
		-3.0	-3.7	64.4	21.1	60.7	19.7	57.1	18.3	55.2	17.6	53.4	16.9	49.7	15.6
		0.0	-0.7	64.4	19.2	60.7	17.9	57.1	16.7	55.2	16.1	53.4	15.5	49.7	14.3
		3.0	2.2	64.4	17.6	60.7	16.4	57.1	15.3	55.2	14.8	53.4	14.2	49.7	13.2
		5.0	4.1	64.4	16.6	60.7	15.5	57.1	14.5	55.2	14.0	53.4	13.5	49.7	12.5
		7.0	6.0	64.4	15.7	60.7	14.7	57.1	13.7	55.2	13.2	53.4	12.8	49.7	11.8
		9.0	7.9	64.4	14.8	60.7	13.9	57.1	13.0	55.2	12.5	53.4	12.1	49.7	11.2
		11.0	9.8	64.4	14.0	60.7	13.2	57.1	12.3	55.2	11.9	53.4	11.5	49.7	10.7
		13.0	11.8	64.4	13.3	60.7	12.4	57.1	11.7	55.2	11.3	53.4	10.9	49.7	10.1
		15.0	13.7	64.4	12.6	60.7	11.8	57.1	11.1	55.2	10.7	53.4	10.4	49.7	9.64
60%	390 (43.80)	-19.8	-20.0	49.3	23.1	49.2	23.6	48.9	23.9	47.3	22.9	45.8	22.0	42.6	20.2
		-18.8	-19.0	50.2	23.2	50.1	23.7	48.9	23.3	47.3	22.4	45.8	21.5	42.6	19.8
		-16.7	-17.0	52.1	23.6	52.0	24.0	48.9	22.2	47.3	21.4	45.8	20.5	42.6	18.9
		-13.7	-15.0	54.4	23.9	52.0	22.8	48.9	21.1	47.3	20.3	45.8	19.5	42.6	18.0
		-11.8	-13.0	55.2	23.2	52.0	21.6	48.9	20.0	47.3	19.3	45.8	18.5	42.6	17.0
		-9.8	-11.0	55.2	21.9	52.0	20.4	48.9	18.9	47.3	18.2	45.8	17.5	42.6	16.2
		-9.5	-10.0	55.2	21.2	52.0	19.8	48.9	18.4	47.3	17.7	45.8	17.0	42.6	15.7
		-8.5	-9.1	55.2	20.7	52.0	19.3	48.9	17.9	47.3	17.3	45.8	16.6	42.6	15.3
		-7.0	-7.6	55.2	19.8	52.0	18.5	48.9	17.2	47.3	16.5	45.8	15.9	42.6	14.7
		-5.0	-5.6	55.2	18.6	52.0	17.4	48.9	16.2	47.3	15.6	45.8	15.0	42.6	13.9
		-3.0	-3.7	55.2	17.6	52.0	16.5	48.9	15.3	47.3	14.8	45.8	14.2	42.6	13.2
		0.0	-0.7	55.2	16.1	52.0	15.1	48.9	14.1	47.3	13.6	45.8	13.1	42.6	12.1
		3.0	2.2	55.2	14.8	52.0	13.8	48.9	12.9	47.3	12.5	45.8	12.0	42.6	11.2
		5.0	4.1	55.2	14.0	52.0	13.1	48.9	12.3	47.3	11.8	45.8	11.4	42.6	10.6
		7.0	6.0	55.2	13.2	52.0	12.4	48.9	11.6	47.3	11.2	45.8	10.9	42.6	10.1
		9.0	7.9	55.2	12.5	52.0	11.8	48.9	11.0	47.3	10.7	45.8	10.3	42.6	9.60
		11.0	9.8	55.2	11.9	52.0	11.2	48.9	10.5	47.3	10.1	45.8	9.81	42.6	9.14
		13.0	11.8	55.2	11.3	52.0	10.6	48.9	9.95	47.3	9.63	45.8	9.32	42.6	8.70
		15.0	13.7	55.2	10.7	52.0	10.1	48.9	9.48	47.3	9.18	45.8	8.88	42.6	8.30
50%	325 (36.50)	-19.8	-20.0	46.0	22.2	43.4	20.6	40.8	19.2	39.4	18.4	38.1	17.7	35.5	16.3
		-18.8	-19.0	46.0	21.7	43.4	20.2	40.8	18.8	39.4	18.1	38.1	17.4	35.5	16.0
		-16.7	-17.0	46.0	20.6	43.4	19.3	40.8	17.9	39.4	17.2	38.1	16.6	35.5	15.3
		-13.7	-15.0	46.0	19.6	43.4	18.3	40.8	17.0	39.4	16.4	38.1	15.8	35.5	14.6
		-11.8	-13.0	46.0	18.6	43.4	17.4	40.8	16.2	39.4	15.6	38.1	15.0	35.5	13.9
		-9.8	-11.0	46.0	17.6	43.4	16.5	40.8	15.4	39.4	14.8	38.1	14.3	35.5	13.2
		-9.5	-10.0	46.0	17.1	43.4	16.0	40.8	14.9	39.4	14.4	38.1	13.9	35.5	12.9
		-8.5	-9.1	46.0	16.7	43.4	15.6	40.8	14.6	39.4	14.1	38.1	13.6	35.5	12.6
		-7.0	-7.6	46.0	16.0	43.4	15.0	40.8	14.0	39.4	13.5	38.1	13.0	35.5	12.1
		-5.0	-5.6	46.0	15.1	43.4	14.2	40.8	13.2	39.4	12.8	38.1	12.3	35.5	11.4
		-3.0	-3.7	46.0	14.3	43.4	13.4	40.8	12.6	39.4	12.1	38.1	11.7	35.5	10.9
		0.0	-0.7	46.0	13.1	43.4	12.3	40.8	11.6	39.4	11.2	38.1	10.8	35.5	10.0
		3.0	2.2	46.0	12.1	43.4	11.4	40.8	10.7	39.4	10.3	38.1	9.99	35.5	9.30
		5.0	4.1	46.0	11.5	43.4	10.8	40.8	10.1	39.4	9.82	38.1	9.50	35.5	8.86
		7.0	6.0	46.0	10.9	43.4	10.3	40.8	9.65	39.4	9.35	38.1	9.04	35.5	8.44
		9.0	7.9	46.0	10.4	43.4	9.77	40.8	9.19	39.4	8.90	38.1	8.62	35.5	8.05
		11.0	9.8	46.0	9.86	43.4	9.30	40.8	8.76	39.4	8.49	38.1	8.22	35.5	7.69
		13.0	11.8	46.0	9.36	43.4	8.84	40.8	8.33	39.4	8.08	38.1	7.83	35.5	7.33
		15.0	13.7	46.0	8.93	43.4	8.44	40.8	7.96	39.4	7.72	38.1	7.48	35.5	7.02

4TW31482-2A

4 Capacity tables

4 - 3 Heating capacity tables

REYQ28P8

TC: Total Capacity: kW ; PI: Power Input: kW (compressor + outdoor fan motor)

Combination (%)	Capacity index (kW)	Outdoor air temp.		Indoor air temperature: °CDB											
				16.0		18.0		20.0		21.0		22.0		24.0	
				TC	PI	TC	PI	TC	PI	TC	PI	TC	PI	TC	PI
		°CDB	°CWB	kW	kW	kW	kW	kW	kW	kW	kW	kW	kW	kW	kW
130	910 (102.25)	-19.8	-20.0	51.4	11.8	51.2	12.9	51.0	14.0	50.9	14.6	50.8	15.2	50.6	16.3
		-18.8	-19.0	52.3	12.2	52.1	13.3	51.9	14.4	51.8	14.9	51.7	15.5	51.5	16.6
		-16.7	-17.0	54.3	12.9	54.1	14.0	53.9	15.0	53.8	15.6	53.7	16.1	53.5	17.2
		-13.7	-15.0	56.5	13.7	56.3	14.7	56.1	15.7	56.0	16.2	55.9	16.7	55.7	17.8
		-11.8	-13.0	59.0	14.5	58.8	15.5	58.6	16.4	58.5	16.9	58.4	17.4	58.2	18.4
		-9.8	-11.0	61.7	15.3	61.5	16.2	61.3	17.1	61.2	17.6	61.1	18.1	60.9	19.0
		-9.5	-10.0	63.1	15.7	62.9	16.6	62.7	17.5	62.6	17.9	62.5	18.4	62.3	19.3
		-8.5	-9.1	64.4	16.0	64.2	16.9	64.0	17.8	63.9	18.2	63.8	18.7	63.6	19.6
		-7.0	-7.6	66.8	16.6	66.6	17.4	66.4	18.3	66.3	18.7	66.2	19.1	66.0	20.0
		-5.0	-5.6	70.1	17.3	69.9	18.2	69.7	19.0	69.6	19.4	69.5	19.8	69.3	20.6
		-3.0	-3.7	73.5	18.0	73.3	18.8	73.1	19.6	73.0	20.0	72.9	20.3	72.7	21.1
		0.0	-0.7	79.2	19.1	79.0	19.8	78.8	20.5	78.7	20.8	78.6	21.2	78.4	21.9
		3.0	2.2	85.3	20.0	85.1	20.7	84.9	21.3	84.8	21.6	84.7	22.0	84.5	22.6
		5.0	4.1	89.5	20.6	89.3	21.2	89.1	21.8	89.0	22.1	88.9	22.5	88.7	23.1
		7.0	6.0	94.0	21.1	93.8	21.7	93.6	22.3	93.5	22.6	93.4	22.9	93.2	23.5
		9.0	7.9	98.6	21.6	98.4	22.2	98.2	22.8	98.1	23.1	98.0	23.3	97.8	23.9
		11.0	9.8	104	22.1	103	22.7	103	23.2	103	23.5	103	23.7	99.1	23.0
		13.0	11.8	109	22.6	109	23.1	108	23.6	108	23.9	106	23.5	99.1	21.6
		15.0	13.7	114	23.0	114	23.5	114	24.0	110	23.1	106	22.2	99.1	20.4
120	840 (94.20)	-19.8	-20.0	51.2	13.3	51.0	14.4	50.8	15.4	50.7	15.9	50.6	16.4	50.4	17.5
		-18.8	-19.0	52.1	13.7	51.9	14.7	51.7	15.7	51.6	16.2	51.5	16.7	51.3	17.7
		-16.7	-17.0	54.0	14.4	53.9	15.3	53.7	16.3	53.6	16.8	53.5	17.3	53.3	18.3
		-13.7	-15.0	56.3	15.1	56.1	16.0	55.9	16.9	55.8	17.4	55.7	17.9	55.5	18.8
		-11.8	-13.0	58.7	15.8	58.5	16.7	58.3	17.6	58.3	18.0	58.2	18.5	58.0	19.4
		-9.8	-11.0	61.4	16.5	61.2	17.4	61.0	18.2	60.9	18.7	60.8	19.1	60.7	19.9
		-9.5	-10.0	62.8	16.9	62.6	17.7	62.5	18.6	62.4	19.0	62.3	19.4	62.1	20.2
		-8.5	-9.1	64.2	17.2	64.0	18.0	63.8	18.8	63.7	19.3	63.6	19.7	63.4	20.5
		-7.0	-7.6	66.5	17.7	66.3	18.5	66.1	19.3	66.0	19.7	65.9	20.1	65.8	20.9
		-5.0	-5.6	69.8	18.4	69.6	19.2	69.5	19.9	69.4	20.3	69.3	20.7	69.1	21.4
		-3.0	-3.7	73.2	19.1	73.0	19.8	72.8	20.5	72.7	20.8	72.6	21.2	72.5	21.9
		0.0	-0.7	78.9	20.0	78.8	20.7	78.6	21.3	78.5	21.7	78.4	22.0	78.2	22.6
		3.0	2.2	85.0	20.9	84.8	21.5	84.6	22.1	84.5	22.4	84.5	22.7	84.3	23.3
		5.0	4.1	89.2	21.4	89.1	22.0	88.9	22.6	88.8	22.9	88.7	23.2	88.5	23.7
		7.0	6.0	93.7	21.9	93.5	22.5	93.3	23.0	93.2	23.3	93.1	23.6	91.5	23.5
		9.0	7.9	98.4	22.4	98.2	22.9	98.0	23.4	97.9	23.7	97.8	24.0	91.5	22.2
		11.0	9.8	103	22.9	103	23.4	103	23.8	102	23.7	98.3	22.7	91.5	20.9
		13.0	11.8	109	23.3	108	23.8	105	23.1	102	22.2	98.3	21.4	91.5	19.7
		15.0	13.7	114	23.7	112	23.5	105	21.8	102	21.0	98.3	20.2	91.5	18.6
110	770 (86.35)	-19.8	-20.0	50.9	14.8	50.7	15.8	50.5	16.7	50.5	17.2	50.4	17.7	50.2	18.6
		-18.8	-19.0	51.8	15.1	51.6	16.1	51.5	17.0	51.4	17.5	51.3	17.9	51.1	18.9
		-16.7	-17.0	53.8	15.8	53.6	16.7	53.4	17.6	53.4	18.0	53.3	18.5	53.1	19.4
		-13.7	-15.0	56.0	16.4	55.8	17.3	55.7	18.2	55.6	18.6	55.5	19.0	55.3	19.9
		-11.8	-13.0	58.4	17.1	58.3	17.9	58.1	18.7	58.0	19.2	57.9	19.6	57.8	20.4
		-9.8	-11.0	61.1	17.8	61.0	18.6	60.8	19.3	60.7	19.7	60.6	20.1	60.5	20.9
		-9.5	-10.0	62.6	18.1	62.4	18.9	62.2	19.6	62.1	20.0	62.1	20.4	61.9	21.2
		-8.5	-9.1	63.9	18.4	63.7	19.2	63.6	19.9	63.5	20.3	63.4	20.6	63.2	21.4
		-7.0	-7.6	66.2	18.9	66.1	19.6	65.9	20.3	65.8	20.7	65.7	21.1	65.6	21.8
		-5.0	-5.6	69.6	19.5	69.4	20.2	69.2	20.9	69.1	21.2	69.0	21.6	68.9	22.3
		-3.0	-3.7	72.9	20.1	72.8	20.8	72.6	21.4	72.5	21.7	72.4	22.1	72.2	22.7
		0.0	-0.7	78.7	21.0	78.5	21.6	78.3	22.2	78.3	22.5	78.2	22.8	78.0	23.4
		3.0	2.2	84.7	21.8	84.6	22.3	84.4	22.9	84.3	23.2	84.2	23.4	83.9	23.9
		5.0	4.1	89.0	22.3	88.8	22.8	88.6	23.3	88.6	23.6	88.5	23.9	83.9	22.5
		7.0	6.0	93.4	22.7	93.3	23.2	93.1	23.7	93.0	24.0	90.1	23.1	83.9	21.2
		9.0	7.9	98.1	23.2	97.9	23.6	96.3	23.5	93.2	22.6	90.1	21.7	83.9	20.0
		11.0	9.8	103	23.6	102	23.9	96.3	22.2	93.2	21.3	90.1	20.5	83.9	18.9
		13.0	11.8	108	24.0	102	22.5	96.3	20.9	93.2	20.1	90.1	19.3	83.9	17.8
		15.0	13.7	109	22.7	102	21.2	96.3	19.7	93.2	19.0	90.1	18.2	83.9	16.8
100	700 (78.50)	-19.8	-20.0	50.6	16.3	50.5	17.2	50.3	18.1	50.2	18.5	50.2	18.9	50.0	19.8
		-18.8	-19.0	51.5	16.6	51.4	17.5	51.2	18.3	51.1	18.7	51.1	19.2	50.9	20.0
		-16.7	-17.0	53.5	17.2	53.4	18.0	53.2	18.8	53.1	19.2	53.0	19.6	52.9	20.5
		-13.7	-15.0	55.7	17.8	55.6	18.6	55.4	19.4	55.3	19.8	55.3	20.1	55.1	20.9
		-11.8	-13.0	58.2	18.4	58.0	19.2	57.9	19.9	57.8	20.3	57.7	20.7	57.6	21.4
		-9.8	-11.0	60.9	19.0	60.7	19.7	60.6	20.4	60.5	20.8	60.4	21.2	60.2	21.9
		-9.5	-10.0	62.3	19.3	62.1	20.0	62.0	20.7	61.9	21.1	61.8	21.4	61.7	22.1
		-8.5	-9.1	63.6	19.6	63.5	20.3	63.3	21.0	63.2	21.3	63.2	21.6	63.0	22.3
		-7.0	-7.6	66.0	20.0	65.8	20.7	65.7	21.3	65.6	21.7	65.5	22.0	65.3	22.7
		-5.0	-5.6	69.3	20.6	69.1	21.2	69.0	21.9	68.9	22.2	68.8	22.5	68.7	23.1
		-3.0	-3.7	72.7	21.1	72.5	21.7	72.3	22.3	72.3	22.6	72.2	22.9	72.0	23.5
		0.0	-0.7	78.4	21.9	78.3	22.5	78.1	23.0	78.0	23.3	77.9	23.6	76.3	23.4
		3.0	2.2	84.5	22.7	84.3	23.2	84.2	23.7	84.1	23.9	81.9	23.2	76.3	21.3
		5.0	4.1	88.7	23.1	88.6	23.6	87.5	23.7	84.7	22.8	81.9	21.9	76.3	20.1
		7.0	6.0	93.2	23.5	93.0	24.0	87.5	22.3	84.7	21.4	81.9	20.6	76.3	19.0
		9.0	7.9	97.8	23.9	93.1	22.6	87.5	21.0	84.7	20.2	81.9	19.4	76.3	17.9
		11.0	9.8	98.7	22.9	93.1	21.3	87.5	19.8	84.7	19.1	81.9	18.4	76.3	16.9
		13.0	11.8	98.7	21.5	93.1	20.1	87.5	18.7	84.7	18.0	81.9	17.3	76.3	16.0
		15.0	13.7	98.7	20.3	93.1	19.0	87.5	17.6	84.7	17.0	81.9	16.4	76.3	15.1

4TW31482-2A

NOTES - ANMERKUNGEN - Σημειώσεις - NOTAS - REMARQUES - NOTE - OPMERKINGEN - примечания - NOTLAR

1 is shown as reference. When selecting the unit models, avoid the Outdoor air temperature range shown by .

dient als Verweis. Vermeiden Sie bei der Auswahl der Gerätemodelle den als markierten Temperaturbereich der Außenluft

Η είναι ενδεικτική. κατά την επιλογή των μοντέλων των μονάδων, αποφύγετε το εύρος θερμοκρασίας εξωτερικού αέρα που υποδεικνύεται

se muestra como referencia. Cuando seleccione los modelos de unidad, evite el intervalo de temperaturas del aire exterior indicado mediante

est montré comme référence.Lors du choix des modèles d'unités, évitez la plage de températures de l'air extérieur illustré par

valori riportati unicamente come riferimento. Nel selezionare i modelli delle unità, non considerare i valori di temperatura dell'aria esterna indicati con il colore

is als referentie getoond. Wanneer modellen van eenheden worden gekozen, vermijd dan het bereik van buitenluchttemperaturen geïllustreerd door

показан как. При выборе модели устройства избегайте внешнюю температуру воздуха, указанную в

referans olarak gösterilmektedir. Ünite modellerini seçerken, belirtilen Dış hava sıcaklığı aralığından kaçının

2 The above table shows the average value of conditions which may occur.

Die obige Tabelle zeigt den Durchschnittswert der Bedingungen, die auftreten können.

Στον παραπάνω πίνακα αναγράφεται η μέση τιμή για συνθήκες που μπορεί να προκύψουν.

La tabla de arriba muestra el valor medio de condiciones que pueden ocurrir.

Le tableau ci-dessus donne la valeur moyenne pour des conditions qui peuvent survenir.

La tabella in alto mostra il valore delle condizioni medie che si possono riscontrare.

De tabel hierboven geeft de gemiddelde waarde aan van situaties die kunnen voorvallen.

Таблица расположенная выше показывает среднее значение условий, которые могут наступить.

Yukarıdaki tablo meydana gelebilecek koşulların ortalama değerini göstermektedir.

4 Capacity tables

4 - 3 Heating capacity tables

REYQ28P8

TC: Total Capacity: kW ; PI: Power Input: kW (compressor + outdoor fan motor)

Combination (%)	Capacity index (kW)	Outdoor air temp.		Indoor air temperature: °CDB											
				16.0		18.0		20.0		21.0		22.0		24.0	
				TC	PI	TC	PI	TC	PI	TC	PI	TC	PI	TC	PI
		°CDB	°CWB	kW	kW	kW	kW	kW	kW	kW	kW	kW	kW	kW	kW
90%	630	-19.8	-20.0	50.3	17.9	50.2	18.6	50.1	19.4	50.0	19.8	49.9	20.2	49.8	21.0
	(70.65)	-18.8	-19.0	51.3	18.1	51.1	18.9	51.0	19.6	50.9	20.0	50.8	20.4	50.7	21.2
		-16.7	-17.0	53.2	18.6	53.1	19.4	53.0	20.1	52.9	20.5	52.8	20.8	52.7	21.6
		-13.7	-15.0	55.5	19.2	55.3	19.9	55.2	20.6	55.1	20.9	55.0	21.3	54.9	22.0
		-11.8	-13.0	57.9	19.7	57.8	20.4	57.6	21.1	57.6	21.4	57.5	21.7	57.3	22.4
		-9.8	-11.0	60.6	20.3	60.5	20.9	60.3	21.6	60.2	21.9	60.2	22.2	60.0	22.8
		-9.5	-10.0	62.0	20.5	61.9	21.2	61.7	21.8	61.7	22.1	61.6	22.4	61.5	23.0
		-8.5	-9.1	63.4	20.8	63.2	21.4	63.1	22.0	63.0	22.3	62.9	22.6	62.8	23.2
		-7.0	-7.6	65.7	21.2	65.6	21.8	65.4	22.4	65.3	22.7	65.3	23.0	65.1	23.5
		-5.0	-5.6	69.0	21.7	68.9	22.3	68.7	22.8	68.7	23.1	68.6	23.4	68.5	23.9
		-3.0	-3.7	72.4	22.2	72.2	22.7	72.1	23.3	72.0	23.5	72.0	23.8	68.6	22.7
		0.0	-0.7	78.1	22.9	78.0	23.4	77.9	23.9	76.2	23.4	73.7	22.4	68.6	20.6
		3.0	2.2	84.2	23.6	83.8	23.9	78.8	22.2	76.2	21.3	73.7	20.5	68.6	18.9
		5.0	4.1	88.4	24.0	83.8	22.5	78.8	20.9	76.2	20.1	73.7	19.3	68.6	17.8
		7.0	6.0	88.9	22.7	83.8	21.2	78.8	19.7	76.2	19.0	73.7	18.2	68.6	16.8
		9.0	7.9	88.9	21.4	83.8	20.0	78.8	18.6	76.2	17.9	73.7	17.2	68.6	15.9
		11.0	9.8	88.9	20.2	83.8	18.9	78.8	17.6	76.2	16.9	73.7	16.3	68.6	15.1
		13.0	11.8	88.9	19.0	83.8	17.8	78.8	16.6	76.2	16.0	73.7	15.4	68.6	14.2
		15.0	13.7	88.9	18.0	83.8	16.8	78.8	15.7	76.2	15.1	73.7	14.6	68.6	13.5
80%	560	-19.8	-20.0	50.1	19.4	50.0	20.1	49.8	20.7	49.8	21.1	49.7	21.4	49.6	22.1
	(62.80)	-18.8	-19.0	51.0	19.6	50.9	20.3	50.7	20.9	50.7	21.3	50.6	21.6	50.5	22.3
		-16.7	-17.0	53.0	20.1	52.8	20.7	52.7	21.4	52.7	21.7	52.6	22.0	52.5	22.7
		-13.7	-15.0	55.2	20.5	55.1	21.2	54.9	21.8	54.9	22.1	54.8	22.4	54.7	23.0
		-11.8	-13.0	57.6	21.0	57.5	21.6	57.4	22.2	57.3	22.5	57.3	22.8	57.1	23.4
		-9.8	-11.0	60.3	21.5	60.2	22.1	60.1	22.7	60.0	22.9	59.9	23.2	59.8	23.8
		-9.5	-10.0	61.7	21.8	61.6	22.3	61.5	22.9	61.4	23.2	61.4	23.4	61.0	23.8
		-8.5	-9.1	63.1	22.0	63.0	22.5	62.8	23.1	62.8	23.3	62.7	23.6	61.0	23.2
		-7.0	-7.6	65.4	22.3	65.3	22.9	65.2	23.4	65.1	23.6	65.1	23.9	61.0	22.2
		-5.0	-5.6	68.7	22.8	68.6	23.3	68.5	23.8	67.8	23.7	65.5	22.7	61.0	20.9
		-3.0	-3.7	72.1	23.2	72.0	23.7	70.0	23.2	67.8	22.3	65.5	21.4	61.0	19.7
		0.0	-0.7	77.9	23.9	74.5	22.7	70.0	21.1	67.8	20.3	65.5	19.5	61.0	18.0
		3.0	2.2	79.0	22.3	74.5	20.8	70.0	19.3	67.8	18.6	65.5	17.9	61.0	16.5
		5.0	4.1	79.0	21.0	74.5	19.6	70.0	18.2	67.8	17.6	65.5	16.9	61.0	15.6
		7.0	6.0	79.0	19.8	74.5	18.5	70.0	17.2	67.8	16.6	65.5	16.0	61.0	14.8
		9.0	7.9	79.0	18.7	74.5	17.4	70.0	16.3	67.8	15.7	65.5	15.1	61.0	14.0
		11.0	9.8	79.0	17.6	74.5	16.5	70.0	15.4	67.8	14.9	65.5	14.3	61.0	13.3
		13.0	11.8	79.0	16.6	74.5	15.6	70.0	14.5	67.8	14.0	65.5	13.5	61.0	12.6
		15.0	13.7	79.0	15.7	74.5	14.8	70.0	13.8	67.8	13.3	65.5	12.9	61.0	11.9
70%	490	-19.8	-20.0	49.8	20.9	49.7	21.5	49.6	22.1	49.5	22.4	49.5	22.7	49.4	23.3
	(54.95)	-18.8	-19.0	50.7	21.1	50.6	21.7	50.5	22.3	50.4	22.6	50.4	22.9	50.3	23.4
		-16.7	-17.0	52.7	21.5	52.6	22.1	52.5	22.6	52.4	22.9	52.4	23.2	52.3	23.8
		-13.7	-15.0	54.9	21.9	54.8	22.5	54.7	23.0	54.6	23.3	54.6	23.5	53.4	23.3
		-11.8	-13.0	57.4	22.3	57.3	22.9	57.1	23.4	57.1	23.6	57.0	23.9	53.4	22.1
		-9.8	-11.0	60.0	22.8	59.9	23.3	59.8	23.8	59.3	23.7	57.3	22.8	53.4	20.9
		-9.5	-10.0	61.5	23.0	61.4	23.5	61.3	23.9	59.3	23.0	57.3	22.1	53.4	20.3
		-8.5	-9.1	62.8	23.2	62.7	23.6	61.3	23.3	59.3	22.4	57.3	21.5	53.4	19.8
		-7.0	-7.6	65.2	23.5	65.0	23.9	61.3	22.3	59.3	21.4	57.3	20.6	53.4	19.0
		-5.0	-5.6	68.5	23.9	65.2	22.6	61.3	21.0	59.3	20.2	57.3	19.4	53.4	17.9
		-3.0	-3.7	69.1	22.8	65.2	21.3	61.3	19.8	59.3	19.1	57.3	18.3	53.4	16.9
		0.0	-0.7	69.1	20.8	65.2	19.4	61.3	18.1	59.3	17.4	57.3	16.8	53.4	15.5
		3.0	2.2	69.1	19.0	65.2	17.8	61.3	16.6	59.3	16.0	57.3	15.4	53.4	14.3
		5.0	4.1	69.1	18.0	65.2	16.8	61.3	15.7	59.3	15.1	57.3	14.6	53.4	13.5
		7.0	6.0	69.1	17.0	65.2	15.9	61.3	14.8	59.3	14.3	57.3	13.8	53.4	12.8
		9.0	7.9	69.1	16.0	65.2	15.0	61.3	14.1	59.3	13.6	57.3	13.1	53.4	12.2
		11.0	9.8	69.1	15.2	65.2	14.2	61.3	13.3	59.3	12.9	57.3	12.4	53.4	11.5
		13.0	11.8	69.1	14.3	65.2	13.5	61.3	12.6	59.3	12.2	57.3	11.8	53.4	11.0
		15.0	13.7	69.1	13.6	65.2	12.8	61.3	12.0	59.3	11.6	57.3	11.2	53.4	10.4
60%	420	-19.8	-20.0	49.5	22.4	49.4	22.9	49.4	23.4	49.3	23.7	49.1	23.8	45.8	21.9
	(47.10)	-18.8	-19.0	50.4	22.6	50.3	23.1	50.3	23.6	50.2	23.8	49.1	23.3	45.8	21.4
		-16.7	-17.0	52.4	22.9	52.3	23.4	52.2	23.9	50.8	23.1	49.1	22.2	45.8	20.4
		-13.7	-15.0	54.6	23.3	54.5	23.7	52.5	22.9	50.8	22.0	49.1	21.1	45.8	19.4
		-11.8	-13.0	57.1	23.6	55.9	23.4	52.5	21.7	50.8	20.9	49.1	20.0	45.8	18.5
		-9.8	-11.0	59.2	23.7	55.9	22.1	52.5	20.5	50.8	19.7	49.1	19.0	45.8	17.5
		-9.5	-10.0	59.2	23.0	55.9	21.4	52.5	19.9	50.8	19.2	49.1	18.5	45.8	17.0
		-8.5	-9.1	59.2	22.4	55.9	20.9	52.5	19.4	50.8	18.7	49.1	18.0	45.8	16.6
		-7.0	-7.6	59.2	21.4	55.9	20.0	52.5	18.6	50.8	17.9	49.1	17.2	45.8	15.9
		-5.0	-5.6	59.2	20.2	55.9	18.8	52.5	17.6	50.8	16.9	49.1	16.3	45.8	15.1
		-3.0	-3.7	59.2	19.1	55.9	17.8	52.5	16.6	50.8	16.0	49.1	15.4	45.8	14.3
		0.0	-0.7	59.2	17.4	55.9	16.3	52.5	15.2	50.8	14.7	49.1	14.2	45.8	13.1
		3.0	2.2	59.2	16.0	55.9	15.0	52.5	14.0	50.8	13.5	49.1	13.0	45.8	12.1
		5.0	4.1	59.2	15.1	55.9	14.2	52.5	13.3	50.8	12.8	49.1	12.4	45.8	11.5
		7.0	6.0	59.2	14.3	55.9	13.4	52.5	12.6	50.8	12.2	49.1	11.7	45.8	10.9
		9.0	7.9	59.2	13.6	55.9	12.7	52.5	11.9	50.8	11.6	49.1	11.2	45.8	10.4
		11.0	9.8	59.2	12.9	55.9	12.1	52.5	11.4	50.8	11.0	49.1	10.6	45.8	9.90
		13.0	11.8	59.2	12.2	55.9	11.5	52.5	10.8	50.8	10.4	49.1	10.1	45.8	9.41
		15.0	13.7	59.2	11.6	55.9	10.9	52.5	10.3	50.8	9.94	49.1	9.62	45.8	8.98
50%	350	-19.8	-20.0	49.3	23.9	46.6	22.4	43.8	20.8	42.3	20.0	40.9	19.2	38.1	17.7
	(39.25)	-18.8	-19.0	49.4	23.5	46.6	21.9	43.8	20.3	42.3	19.5	40.9	18.8	38.1	17.3
		-16.7	-17.0	49.4	22.4	46.6	20.9	43.8	19.4	42.3	18.7	40.9	18.0	38.1	16.6
		-13.7	-15.0	49.4	21.3	46.6	19.8	43.8	18.5	42.3	17.8	40.9	17.1	38.1	15.8
		-11.8	-13.0	49.4	20.2	46.6	18.8	43.8	17.5	42.3	16.9	40.9	16.3	38.1	15.0
		-9.8	-11.0	49.4	19.1	46.6	17.8	43.8	16.6	42.3	16.0	40.9	15.4	38.1	14.3
		-9.5	-10.0	49.4	18.6	46.6	17.4	43.8	16.2	42.3	15.6	40.9	15.0	38.1	13.9
		-8.5	-9.1	49.4	18.1	46.6	16.9	43.8	15.8	42.3	15.2	40.9	14.7	38.1	13.6
		-7.0	-7.6	49.4	17.3	46.6	16.2	43.8	15.2	42.3	14.6	40.9	14.1	38.1	13.1
		-5.0	-5.6	49.4	16.4	46.6	15.3	43.8	14.3	42.3	13.8	40.9	13.4	38.1	12.4
		-3.0	-3.7	49.4	15.5	46.6	14.5	43.8	13.6	42.3	13.1	40.9	12.7	38.1	11.8
		0.0	-0.7	49.4	14.2	46.6	13.4	43.8	12.5	42.3	12.1	40.9	11.7	38.1	10.9
		3.0	2.2	49.4	13.1	46.6	12.3	43.8	11.6	42.3	11.2	40.9	10.8	38.1	10.1
		5.0	4.1	49.4	12.4	46.6	11.7	43.8	11.0	42.3	10.6	40.9	10.3	38.1	9.59
		7.0	6.0	49.4	11.8	46.6	11.1	43.8	10.4	42.3	10.1	40.9	9.79	38.1	9.14
		9.0	7.9	49.4	11.2	46.6	10.6	43.8	9.95	42.3	9.63	40.9	9.33	38.1	8.72
		11.0	9.8	49.4	10.7	46.6	10.1	43.8	9.48	42.3	9.18	40.9	8.89	38.1	8.32
		13.0	11.8	49.4	10.1	46.6	9.57	43.8	9.02	42.3	8.74	40.9	8.47	38.1	7.94
		15.0	13.7	49.4	9.66	46.6	9.13	43.8	8.61	42.3	8.35	40.9	8.10	38.1	7.59

4TW31482-2A

4 Capacity tables

4 - 3 Heating capacity tables

REYQ30P8

TC: Total Capacity: kW ; PI: Power Input: kW (compressor + outdoor fan motor)

Combination (%)	Capacity index (kW)	Outdoor air temp.		Indoor air temperature: °CDB											
				16.0		18.0		20.0		21.0		22.0		24.0	
				TC	PI	TC	PI	TC	PI	TC	PI	TC	PI	TC	PI
		°CDB	°CWB	kW	kW	kW	kW	kW	kW	kW	kW	kW	kW	kW	kW
130	260 (29.12)	-19.8	-20.0	57.0	13.7	56.8	14.9	56.6	16.1	56.5	16.7	56.4	17.3	56.1	18.5
		-18.8	-19.0	58.0	14.1	57.8	15.3	57.6	16.4	57.5	17.0	57.4	17.6	57.2	18.8
		-16.7	-17.0	60.3	14.9	60.0	16.0	59.8	17.2	59.7	17.8	59.6	18.3	59.4	19.5
		-13.7	-15.0	62.7	15.7	62.5	16.8	62.3	17.9	62.2	18.5	62.1	19.0	61.9	20.1
		-11.8	-13.0	65.5	16.6	65.3	17.6	65.0	18.7	64.9	19.2	64.8	19.7	64.6	20.8
		-9.8	-11.0	68.5	17.5	68.3	18.5	68.0	19.5	67.9	20.0	67.8	20.4	67.6	21.4
		-9.5	-10.0	70.1	17.9	69.8	18.9	69.6	19.8	69.5	20.3	69.4	20.8	69.2	21.8
		-8.5	-9.1	71.5	18.3	71.3	19.2	71.1	20.2	71.0	20.6	70.9	21.1	70.7	22.1
		-7.0	-7.6	74.1	18.9	73.9	19.8	73.7	20.7	73.6	21.2	73.5	21.6	73.3	22.5
		-5.0	-5.6	77.8	19.7	77.6	20.5	77.4	21.4	77.2	21.9	77.1	22.3	76.9	23.2
		-3.0	-3.7	81.5	20.4	81.3	21.2	81.1	22.1	81.0	22.5	80.8	22.9	80.6	23.7
		0.0	-0.7	87.8	21.5	87.6	22.3	87.4	23.1	87.3	23.4	87.2	23.8	87.0	24.6
		3.0	2.2	94.5	22.5	94.3	23.2	94.0	23.9	93.9	24.3	93.8	24.7	93.6	25.4
		5.0	4.1	99.1	23.1	98.9	23.8	98.7	24.5	98.6	24.8	98.5	25.2	98.3	25.8
		7.0	6.0	104	23.7	104	24.4	104	25.0	103	25.3	103	25.7	103	26.3
		9.0	7.9	109	24.3	109	24.9	109	25.5	109	25.8	108	26.1	108	26.5
		11.0	9.8	114	24.8	114	25.4	114	26.0	114	26.3	114	26.6	108	25.0
		13.0	11.8	120	25.3	120	25.9	120	26.4	120	26.6	116	25.6	108	23.5
		15.0	13.7	126	25.8	126	26.3	124	26.1	120	25.1	116	24.1	108	22.2
120	240 (26.88)	-19.8	-20.0	56.7	15.3	56.5	16.4	56.3	17.5	56.2	18.1	56.1	18.7	55.9	19.8
		-18.8	-19.0	57.7	15.7	57.5	16.8	57.3	17.9	57.2	18.4	57.1	19.0	56.9	20.1
		-16.7	-17.0	60.0	16.4	59.8	17.5	59.6	18.5	59.5	19.1	59.4	19.6	59.2	20.7
		-13.7	-15.0	62.5	17.2	62.3	18.2	62.1	19.2	62.0	19.7	61.9	20.3	61.7	21.3
		-11.8	-13.0	65.2	18.0	65.0	19.0	64.8	19.9	64.7	20.4	64.6	20.9	64.4	21.9
		-9.8	-11.0	68.2	18.8	68.0	19.7	67.8	20.6	67.7	21.1	67.6	21.6	67.4	22.5
		-9.5	-10.0	69.8	19.2	69.6	20.1	69.4	21.0	69.3	21.4	69.2	21.9	69.0	22.8
		-8.5	-9.1	71.2	19.5	71.0	20.4	70.8	21.3	70.7	21.7	70.6	22.2	70.4	23.1
		-7.0	-7.6	73.8	20.1	73.6	21.0	73.4	21.8	73.3	22.2	73.2	22.7	73.0	23.5
		-5.0	-5.6	77.5	20.9	77.3	21.7	77.1	22.5	77.0	22.9	76.9	23.3	76.7	24.1
		-3.0	-3.7	81.2	21.5	81.0	22.3	80.8	23.1	80.7	23.5	80.6	23.8	80.4	24.6
		0.0	-0.7	87.5	22.6	87.3	23.3	87.1	24.0	87.0	24.3	86.9	24.7	86.7	25.4
		3.0	2.2	94.2	23.5	94.0	24.1	93.8	24.8	93.7	25.1	93.6	25.5	93.4	26.1
		5.0	4.1	98.8	24.1	98.6	24.7	98.4	25.3	98.3	25.6	98.2	25.9	98.0	26.6
		7.0	6.0	104	24.6	104	25.2	103	25.8	103	26.1	103	26.4	99.4	25.5
		9.0	7.9	109	25.1	109	25.7	108	26.2	108	26.5	107	26.2	99.4	24.1
		11.0	9.8	114	25.6	114	26.1	114	26.7	110	25.7	107	24.7	99.4	22.7
		13.0	11.8	120	26.1	120	26.6	114	25.2	110	24.2	107	23.2	99.4	21.4
		15.0	13.7	126	26.5	121	25.6	114	23.7	110	22.8	107	22.0	99.4	20.2
110	220 (24.64)	-19.8	-20.0	56.4	16.9	56.2	18.0	56.1	19.0	56.0	19.5	55.9	20.0	55.7	21.0
		-18.8	-19.0	57.4	17.3	57.3	18.3	57.1	19.3	57.0	19.8	56.9	20.3	56.7	21.3
		-16.7	-17.0	59.7	18.0	59.5	18.9	59.3	19.9	59.2	20.4	59.1	20.9	58.9	21.8
		-13.7	-15.0	62.2	18.7	62.0	19.6	61.8	20.6	61.7	21.0	61.6	21.5	61.4	22.4
		-11.8	-13.0	64.9	19.4	64.7	20.3	64.5	21.2	64.4	21.6	64.3	22.1	64.2	23.0
		-9.8	-11.0	67.9	20.2	67.7	21.0	67.5	21.8	67.4	22.3	67.3	22.7	67.1	23.5
		-9.5	-10.0	69.5	20.5	69.3	21.3	69.1	22.2	69.0	22.6	68.9	23.0	68.7	23.8
		-8.5	-9.1	71.0	20.8	70.8	21.6	70.6	22.4	70.5	22.8	70.4	23.2	70.2	24.1
		-7.0	-7.6	73.5	21.4	73.3	22.1	73.2	22.9	73.1	23.3	73.0	23.7	72.8	24.5
		-5.0	-5.6	77.2	22.0	77.0	22.8	76.8	23.5	76.7	23.9	76.6	24.3	76.5	25.0
		-3.0	-3.7	80.9	22.7	80.7	23.4	80.5	24.1	80.5	24.4	80.4	24.8	80.2	25.5
		0.0	-0.7	87.2	23.6	87.1	24.3	86.9	24.9	86.8	25.2	86.7	25.6	86.5	26.2
		3.0	2.2	93.9	24.4	93.7	25.1	93.5	25.7	93.4	26.0	93.3	26.3	91.1	25.9
		5.0	4.1	98.5	25.0	98.4	25.5	98.2	26.1	98.1	26.4	97.8	26.6	91.1	24.4
		7.0	6.0	103	25.5	103	26.0	103	26.6	101	26.1	97.8	25.1	91.1	23.0
		9.0	7.9	109	25.9	108	26.5	105	25.6	101	24.6	97.8	23.6	91.1	21.7
		11.0	9.8	114	26.4	111	26.0	105	24.1	101	23.2	97.8	22.3	91.1	20.5
		13.0	11.8	118	26.2	111	24.4	105	22.7	101	21.8	97.8	21.0	91.1	19.3
		15.0	13.7	118	24.7	111	23.1	105	21.4	101	20.6	97.8	19.8	91.1	18.3
100	200 (22.40)	-19.8	-20.0	56.1	18.6	56.0	19.5	55.8	20.4	55.7	20.9	55.6	21.4	55.5	22.3
		-18.8	-19.0	57.2	18.9	57.0	19.8	56.8	20.7	56.7	21.2	56.6	21.6	56.5	22.5
		-16.7	-17.0	59.4	19.5	59.2	20.4	59.0	21.3	59.0	21.7	58.9	22.2	58.7	23.0
		-13.7	-15.0	61.9	20.2	61.7	21.0	61.5	21.9	61.4	22.3	61.4	22.7	61.2	23.5
		-11.8	-13.0	64.6	20.8	64.4	21.6	64.3	22.5	64.2	22.9	64.1	23.3	63.9	24.1
		-9.8	-11.0	67.6	21.5	67.4	22.3	67.3	23.0	67.2	23.4	67.1	23.8	66.9	24.6
		-9.5	-10.0	69.2	21.8	69.0	22.6	68.8	23.3	68.8	23.7	68.7	24.1	68.5	24.8
		-8.5	-9.1	70.7	22.1	70.5	22.8	70.3	23.6	70.2	23.9	70.2	24.3	70.0	25.0
		-7.0	-7.6	73.2	22.6	73.1	23.3	72.9	24.0	72.8	24.4	72.7	24.7	72.6	25.4
		-5.0	-5.6	76.9	23.2	76.7	23.9	76.6	24.6	76.5	24.9	76.4	25.2	76.2	25.9
		-3.0	-3.7	80.6	23.8	80.5	24.4	80.3	25.1	80.2	25.4	80.1	25.7	80.0	26.3
		0.0	-0.7	86.9	24.6	86.8	25.2	86.6	25.8	86.5	26.1	86.4	26.4	82.8	25.3
		3.0	2.2	93.6	25.4	93.4	26.0	93.3	26.5	91.9	26.2	88.9	25.2	82.8	23.1
		5.0	4.1	98.2	25.9	98.1	26.4	95.0	25.7	91.9	24.7	88.9	23.7	82.8	21.8
		7.0	6.0	103	26.3	101	26.1	95.0	24.2	91.9	23.3	88.9	22.4	82.8	20.6
		9.0	7.9	107	26.4	101	24.6	95.0	22.8	91.9	22.0	88.9	21.1	82.8	19.5
		11.0	9.8	107	24.9	101	23.2	95.0	21.5	91.9	20.7	88.9	19.9	82.8	18.4
		13.0	11.8	107	23.4	101	21.8	95.0	20.3	91.9	19.6	88.9	18.8	82.8	17.4
		15.0	13.7	107	22.1	101	20.6	95.0	19.2	91.9	18.5	88.9	17.8	82.8	16.5

4TW31482-2A

NOTES - ANMERKUNGEN - Σημειώσεις - NOTAS - REMARQUES - NOTE - OPMERKINGEN - примечания - NOTLAR

1 is shown as reference. When selecting the unit models, avoid the Outdoor air temperature range shown by .

dient als Verweis. Vermeiden Sie bei der Auswahl der Gerätemodelle den als markierten Temperaturbereich der Außenluft

Η είναι ενδεικτική. κατά την επιλογή των μοντέλων των μονάδων, αποφύγετε το εύρος θερμοκρασίας εξωτερικού αέρα που υποδεικνύεται

se muestra como referencia. Cuando seleccione los modelos de unidad, evite el intervalo de temperaturas del aire exterior indicado mediante

est montré comme référence.Lors du choix des modèles d'unités, évitez la plage de températures de l'air extérieur illustré par

valori riportati unicamente come riferimento. Nel selezionare i modelli delle unità, non considerare i valori di temperatura dell'aria esterna indicati con il colore

is als referentie getoond. Wanneer modellen van eenheden worden gekozen, vermijd dan het bereik van buitenluchttemperaturen geïllustreerd door

показан как. При выборе модели устройства избегайте внешнюю температуру воздуха, указанную в

referans olarak gösterilmektedir. Ünite modellerini seçerken, belirtilen Dış hava sıcaklığı aralığından kaçının

2 The above table shows the average value of conditions which may occur.

Die obige Tabelle zeigt den Durchschnittswert der Bedingungen, die auftreten können.

Στον παραπάνω πίνακα αναγράφεται η μέση τιμή για συνθήκες που μπορεί να προκύψουν.

La tabla de arriba muestra el valor medio de condiciones que pueden ocurrir.

Le tableau ci-dessus donne la valeur moyenne pour des conditions qui peuvent survenir.

La tabella in alto mostra il valore delle condizioni medie che si possono riscontrare.

De tabel hierboven geeft de gemiddelde waarde aan van situaties die kunnen voorvallen.

Таблица расположенная выше показывает среднее значение условий, которые могут наступить.

Yukarıdaki tablo meydana gelebilecek koşulların ortalama değerini göstermektedir.

4 Capacity tables

4 - 3 Heating capacity tables

REYQ30P8

TC: Total Capacity: kW ; PI: Power Input: kW (compressor + outdoor fan motor)

Combination (%)	Capacity index (kW)	Outdoor air temp.		Indoor air temperature: °CDB											
				16.0		18.0		20.0		21.0		22.0		24.0	
				TC	PI	TC	PI	TC	PI	TC	PI	TC	PI	TC	PI
		°CDB	°CWB	kW	kW	kW	kW	kW	kW	kW	kW	kW	kW	kW	kW
90%	675 (76.50)	-19.8	-20.0	55.8	20.2	55.7	21.1	55.5	21.9	55.5	22.3	55.4	22.7	55.2	23.6
		-18.8	-19.0	56.9	20.5	56.7	21.3	56.6	22.1	56.5	22.6	56.4	23.0	56.3	23.8
		-16.7	-17.0	59.1	21.1	58.9	21.9	58.8	22.7	58.7	23.0	58.6	23.4	58.5	24.2
		-13.7	-15.0	61.6	21.7	61.4	22.4	61.3	23.2	61.2	23.6	61.1	23.9	61.0	24.7
		-11.8	-13.0	64.3	22.3	64.2	23.0	64.0	23.7	63.9	24.1	63.9	24.4	63.7	25.2
		-9.8	-11.0	67.3	22.8	67.1	23.5	67.0	24.2	66.9	24.6	66.8	24.9	66.7	25.6
		-9.5	-10.0	68.9	23.1	68.7	23.8	68.6	24.5	68.5	24.8	68.4	25.2	68.3	25.8
		-8.5	-9.1	70.4	23.4	70.2	24.1	70.1	24.7	70.0	25.1	69.9	25.4	69.8	26.0
		-7.0	-7.6	72.9	23.8	72.8	24.5	72.6	25.1	72.6	25.4	72.5	25.7	72.3	26.4
		-5.0	-5.6	76.6	24.4	76.5	25.0	76.3	25.6	76.2	25.9	76.2	26.2	74.5	26.0
		-3.0	-3.7	80.3	24.9	80.2	25.5	80.0	26.1	79.9	26.3	79.9	26.6	74.5	24.5
		0.0	-0.7	86.7	25.7	86.5	26.2	85.5	26.3	82.8	25.3	80.0	24.3	74.5	22.3
		3.0	2.2	93.3	26.4	91.0	25.9	85.5	24.0	82.8	23.1	80.0	22.2	74.5	20.4
		5.0	4.1	96.5	26.2	91.0	24.4	85.5	22.7	82.8	21.8	80.0	21.0	74.5	19.3
		7.0	6.0	96.5	24.7	91.0	23.0	85.5	21.4	82.8	20.6	80.0	19.8	74.5	18.3
		9.0	7.9	96.5	23.2	91.0	21.7	85.5	20.2	82.8	19.4	80.0	18.7	74.5	17.3
		11.0	9.8	96.5	21.9	91.0	20.5	85.5	19.1	82.8	18.4	80.0	17.7	74.5	16.4
		13.0	11.8	96.5	20.7	91.0	19.3	85.5	18.0	82.8	17.4	80.0	16.7	74.5	15.5
		15.0	13.7	96.5	19.5	91.0	18.3	85.5	17.1	82.8	16.5	80.0	15.9	74.5	14.7
80%	600 (68.00)	-19.8	-20.0	55.5	21.8	55.4	22.6	55.3	23.3	55.2	23.7	55.1	24.1	55.0	24.8
		-18.8	-19.0	56.6	22.1	56.4	22.8	56.3	23.6	56.2	23.9	56.2	24.3	56.0	25.0
		-16.7	-17.0	58.8	22.6	58.7	23.3	58.5	24.0	58.5	24.4	58.4	24.7	58.3	25.4
		-13.7	-15.0	61.3	23.1	61.1	23.8	61.0	24.5	60.9	24.8	60.9	25.2	60.7	25.8
		-11.8	-13.0	64.0	23.7	63.9	24.3	63.7	25.0	63.7	25.3	63.6	25.6	63.5	26.2
		-9.8	-11.0	67.0	24.2	66.9	24.8	66.7	25.4	66.7	25.7	66.6	26.0	66.2	26.5
		-9.5	-10.0	68.6	24.5	68.5	25.1	68.3	25.7	68.3	26.0	68.2	26.3	66.2	25.7
		-8.5	-9.1	70.1	24.7	69.9	25.3	69.8	25.9	69.7	26.2	69.7	26.5	66.2	25.1
		-7.0	-7.6	72.7	25.1	72.5	25.6	72.4	26.2	72.3	26.5	71.1	26.1	66.2	24.0
		-5.0	-5.6	76.3	25.6	76.2	26.1	76.0	26.6	73.6	25.6	71.1	24.6	66.2	22.6
		-3.0	-3.7	80.0	26.0	79.9	26.5	76.0	25.1	73.6	24.1	71.1	23.2	66.2	21.3
		0.0	-0.7	85.8	26.4	80.9	24.6	76.0	22.9	73.6	22.0	71.1	21.2	66.2	19.5
		3.0	2.2	85.8	24.1	80.9	22.5	76.0	20.9	73.6	20.1	71.1	19.4	66.2	17.9
		5.0	4.1	85.8	22.7	80.9	21.2	76.0	19.8	73.6	19.0	71.1	18.3	66.2	16.9
		7.0	6.0	85.8	21.4	80.9	20.0	76.0	18.7	73.6	18.0	71.1	17.3	66.2	16.0
		9.0	7.9	85.8	20.3	80.9	18.9	76.0	17.7	73.6	17.0	71.1	16.4	66.2	15.2
		11.0	9.8	85.8	19.2	80.9	17.9	76.0	16.7	73.6	16.1	71.1	15.6	66.2	14.4
		13.0	11.8	85.8	18.1	80.9	16.9	76.0	15.8	73.6	15.3	71.1	14.7	66.2	13.7
		15.0	13.7	85.8	17.1	80.9	16.1	76.0	15.0	73.6	14.5	71.1	14.0	66.2	13.0
70%	525 (59.50)	-19.8	-20.0	55.2	23.5	55.1	24.1	55.0	24.8	55.0	25.1	54.9	25.4	54.8	26.1
		-18.8	-19.0	56.3	23.7	56.2	24.3	56.0	25.0	56.0	25.3	55.9	25.6	55.8	26.3
		-16.7	-17.0	58.5	24.2	58.4	24.8	58.3	25.4	58.2	25.7	58.2	26.0	58.0	26.6
		-13.7	-15.0	61.0	24.6	60.9	25.2	60.8	25.8	60.7	26.1	60.6	26.4	58.0	25.2
		-11.8	-13.0	63.7	25.1	63.6	25.6	63.5	26.2	63.4	26.5	62.2	26.0	58.0	23.9
		-9.8	-11.0	66.7	25.5	66.6	26.1	66.5	26.6	64.4	25.6	62.2	24.6	58.0	22.6
		-9.5	-10.0	68.3	25.8	68.2	26.3	66.5	25.9	64.4	24.9	62.2	23.9	58.0	22.0
		-8.5	-9.1	69.8	26.0	69.7	26.5	66.5	25.2	64.4	24.2	62.2	23.3	58.0	21.4
		-7.0	-7.6	72.4	26.3	70.8	26.0	66.5	24.1	64.4	23.2	62.2	22.3	58.0	20.5
		-5.0	-5.6	75.0	26.2	70.8	24.4	66.5	22.7	64.4	21.8	62.2	21.0	58.0	19.3
		-3.0	-3.7	75.0	24.7	70.8	23.0	66.5	21.4	64.4	20.6	62.2	19.8	58.0	18.3
		0.0	-0.7	75.0	22.5	70.8	21.0	66.5	19.6	64.4	18.9	62.2	18.2	58.0	16.8
		3.0	2.2	75.0	20.6	70.8	19.3	66.5	18.0	64.4	17.3	62.2	16.7	58.0	15.4
		5.0	4.1	75.0	19.5	70.8	18.2	66.5	17.0	64.4	16.4	62.2	15.8	58.0	14.6
		7.0	6.0	75.0	18.4	70.8	17.2	66.5	16.1	64.4	15.5	62.2	15.0	58.0	13.9
		9.0	7.9	75.0	17.4	70.8	16.3	66.5	15.3	64.4	14.7	62.2	14.2	58.0	13.2
		11.0	9.8	75.0	16.5	70.8	15.5	66.5	14.5	64.4	14.0	62.2	13.5	58.0	12.5
		13.0	11.8	75.0	15.6	70.8	14.6	66.5	13.7	64.4	13.3	62.2	12.8	58.0	11.9
		15.0	13.7	75.0	14.8	70.8	13.9	66.5	13.0	64.4	12.6	62.2	12.2	58.0	11.3
60%	450 (51.00)	-19.8	-20.0	55.0	25.1	54.9	25.7	54.8	26.2	54.7	26.5	53.3	25.8	49.7	23.7
		-18.8	-19.0	56.0	25.3	55.9	25.9	55.8	26.4	55.2	26.3	53.3	25.2	49.7	23.2
		-16.7	-17.0	58.2	25.7	58.1	26.2	57.0	26.0	55.2	25.0	53.3	24.0	49.7	22.1
		-13.7	-15.0	60.7	26.1	60.6	26.6	57.0	24.7	55.2	23.8	53.3	22.8	49.7	21.0
		-11.8	-13.0	63.4	26.5	60.7	25.2	57.0	23.4	55.2	22.5	53.3	21.7	49.7	19.9
		-9.8	-11.0	64.3	25.6	60.7	23.8	57.0	22.2	55.2	21.3	53.3	20.5	49.7	18.9
		-9.5	-10.0	64.3	24.9	60.7	23.2	57.0	21.5	55.2	20.7	53.3	19.9	49.7	18.4
		-8.5	-9.1	64.3	24.2	60.7	22.6	57.0	21.0	55.2	20.2	53.3	19.4	49.7	17.9
		-7.0	-7.6	64.3	23.2	60.7	21.6	57.0	20.1	55.2	19.4	53.3	18.6	49.7	17.2
		-5.0	-5.6	64.3	21.8	60.7	20.4	57.0	19.0	55.2	18.3	53.3	17.6	49.7	16.3
		-3.0	-3.7	64.3	20.6	60.7	19.3	57.0	18.0	55.2	17.3	53.3	16.7	49.7	15.4
		0.0	-0.7	64.3	18.9	60.7	17.7	57.0	16.5	55.2	15.9	53.3	15.3	49.7	14.2
		3.0	2.2	64.3	17.3	60.7	16.2	57.0	15.2	55.2	14.7	53.3	14.1	49.7	13.1
		5.0	4.1	64.3	16.4	60.7	15.4	57.0	14.4	55.2	13.9	53.3	13.4	49.7	12.5
		7.0	6.0	64.3	15.5	60.7	14.6	57.0	13.7	55.2	13.2	53.3	12.7	49.7	11.9
		9.0	7.9	64.3	14.7	60.7	13.8	57.0	13.0	55.2	12.5	53.3	12.1	49.7	11.3
		11.0	9.8	64.3	14.0	60.7	13.2	57.0	12.3	55.2	11.9	53.3	11.5	49.7	10.8
		13.0	11.8	64.3	13.3	60.7	12.5	57.0	11.7	55.2	11.3	53.3	11.0	49.7	10.2
		15.0	13.7	64.3	12.6	60.7	11.9	57.0	11.2	55.2	10.8	53.3	10.5	49.7	9.77
50%	375 (42.50)	-19.8	-20.0	53.6	26.0	50.6	24.2	47.5	22.5	46.0	21.6	44.4	20.8	41.4	19.2
		-18.8	-19.0	53.6	25.4	50.6	23.6	47.5	22.0	46.0	21.1	44.4	20.3	41.4	18.8
		-16.7	-17.0	53.6	24.2	50.6	22.5	47.5	21.0	46.0	20.2	44.4	19.4	41.4	17.9
		-13.7	-15.0	53.6	23.0	50.6	21.4	47.5	20.0	46.0	19.2	44.4	18.5	41.4	17.1
		-11.8	-13.0	53.6	21.8	50.6	20.4	47.5	19.0	46.0	18.3	44.4	17.6	41.4	16.3
		-9.8	-11.0	53.6	20.6	50.6	19.3	47.5	18.0	46.0	17.3	44.4	16.7	41.4	15.5
		-9.5	-10.0	53.6	20.1	50.6	18.8	47.5	17.5	46.0	16.9	44.4	16.3	41.4	15.1
		-8.5	-9.1	53.6	19.6	50.6	18.3	47.5	17.1	46.0	16.5	44.4	15.9	41.4	14.7
		-7.0	-7.6	53.6	18.7	50.6	17.6	47.5	16.4	46.0	15.8	44.4	15.2	41.4	14.1
		-5.0	-5.6	53.6	17.7	50.6	16.6	47.5	15.5	46.0	15.0	44.4	14.4	41.4	13.4
		-3.0	-3.7	53.6	16.8	50.6	15.7	47.5	14.7	46.0	14.2	44.4	13.7	41.4	12.7
		0.0	-0.7	53.6	15.4	50.6	14.5	47.5	13.6	46.0	13.1	44.4	12.7	41.4	11.8
		3.0	2.2	53.6	14.2	50.6	13.4	47.5	12.5	46.0	12.1	44.4	11.7	41.4	10.9
		5.0	4.1	53.6	13.5	50.6	12.7	47.5	11.9	46.0	11.5	44.4	11.2	41.4	10.4
		7.0	6.0	53.6	12.8	50.6	12.1	47.5	11.3	46.0	11.0	44.4	10.6	41.4	9.92
		9.0	7.9	53.6	12.2	50.6	11.5	47.5	10.8	46.0	10.5	44.4	10.1	41.4	9.47
		11.0	9.8	53.6	11.6	50.6	10.9	47.5	10.3	46.0	9.98	44.4	9.66	41.4	9.04
		13.0	11.8	53.6	11.0	50.6	10.4	47.5	9.80	46.0	9.51	44.4	9.21	41.4	8.63
		15.0	13.7	53.6	10.5	50.6	9.93	47.5	9.37	46.0	9.09	44.4	8.81	41.4	8.26

4TW31482-2A

4 Capacity tables

4 - 3 Heating capacity tables

REYQ32P8

TC: Total Capacity: kW ; PI: Power Input: kW (compressor + outdoor fan motor)

Combination (%)	Capacity index (kW)	Outdoor air temp.		Indoor air temperature: °CDB											
				16.0		18.0		20.0		21.0		22.0		24.0	
				TC	PI	TC	PI	TC	PI	TC	PI	TC	PI	TC	PI
		°CDB	°CWB	kW	kW	kW	kW	kW	kW	kW	kW	kW	kW	kW	kW
130	1040 (117.00)	-19.8	-20.0	61.3	15.6	61.1	16.9	60.9	18.2	60.8	18.8	60.7	19.5	60.4	20.8
		-18.8	-19.0	62.4	16.0	62.2	17.3	62.0	18.6	61.9	19.2	61.8	19.8	61.5	21.1
		-16.7	-17.0	64.8	16.9	64.6	18.1	64.4	19.4	64.3	20.0	64.2	20.6	63.9	21.8
		-13.7	-15.0	67.5	17.8	67.3	19.0	67.1	20.2	67.0	20.7	66.8	21.3	66.6	22.5
		-11.8	-13.0	70.5	18.7	70.2	19.9	70.0	21.0	69.9	21.5	69.8	22.1	69.6	23.2
		-9.8	-11.0	73.7	19.6	73.5	20.7	73.2	21.8	73.1	22.3	73.0	22.8	72.8	23.9
		-9.5	-10.0	75.4	20.1	75.2	21.1	74.9	22.2	74.8	22.7	74.7	23.2	74.5	24.3
		-8.5	-9.1	77.0	20.5	76.8	21.5	76.5	22.5	76.4	23.0	76.3	23.5	76.1	24.6
		-7.0	-7.6	79.8	21.2	79.6	22.1	79.3	23.1	79.2	23.6	79.1	24.1	78.9	25.1
		-5.0	-5.6	83.7	22.0	83.5	22.9	83.3	23.9	83.2	24.3	83.0	24.8	82.8	25.7
		-3.0	-3.7	87.7	22.8	87.5	23.7	87.3	24.6	87.2	25.0	87.0	25.5	86.8	26.3
		0.0	-0.7	94.6	24.0	94.3	24.8	94.1	25.6	94.0	26.0	93.9	26.4	93.6	27.3
		3.0	2.2	102	25.1	101	25.8	101	26.6	101	27.0	101	27.3	101	28.1
		5.0	4.1	107	25.7	106	26.4	106	27.2	106	27.5	106	27.9	106	28.6
		7.0	6.0	112	26.3	112	27.0	112	27.7	111	28.1	111	28.4	111	29.1
		9.0	7.9	117	26.9	117	27.6	117	28.2	117	28.6	117	28.9	113	28.3
		11.0	9.8	123	27.5	123	28.1	123	28.7	123	29.0	122	29.0	113	26.6
		13.0	11.8	130	28.0	129	28.6	129	29.2	126	28.4	122	27.3	113	25.0
		15.0	13.7	136	28.5	136	29.1	130	27.9	126	26.8	122	25.7	113	23.7
120	960 (108.00)	-19.8	-20.0	61.0	17.4	60.8	18.5	60.6	19.7	60.5	20.3	60.4	20.9	60.2	22.1
		-18.8	-19.0	62.1	17.7	61.9	18.9	61.7	20.1	61.6	20.7	61.5	21.3	61.3	22.4
		-16.7	-17.0	64.5	18.6	64.3	19.7	64.1	20.8	64.0	21.4	63.9	21.9	63.7	23.1
		-13.7	-15.0	67.2	19.4	67.0	20.5	66.8	21.6	66.7	22.1	66.6	22.6	66.4	23.7
		-11.8	-13.0	70.2	20.2	70.0	21.3	69.7	22.3	69.6	22.8	69.5	23.3	69.3	24.4
		-9.8	-11.0	73.4	21.1	73.2	22.1	73.0	23.1	72.9	23.5	72.7	24.0	72.5	25.0
		-9.5	-10.0	75.1	21.5	74.9	22.5	74.7	23.4	74.6	23.9	74.5	24.4	74.2	25.3
		-8.5	-9.1	76.7	21.9	76.5	22.8	76.3	23.7	76.2	24.2	76.1	24.7	75.8	25.6
		-7.0	-7.6	79.5	22.5	79.3	23.4	79.1	24.3	78.9	24.7	78.8	25.2	78.6	26.1
		-5.0	-5.6	83.4	23.3	83.2	24.1	83.0	25.0	82.9	25.4	82.8	25.9	82.6	26.7
		-3.0	-3.7	87.4	24.0	87.2	24.8	87.0	25.6	86.9	26.0	86.8	26.5	86.6	27.3
		0.0	-0.7	94.2	25.1	94.0	25.8	93.8	26.6	93.7	27.0	93.6	27.4	93.4	28.1
		3.0	2.2	101	26.1	101	26.8	101	27.5	101	27.8	101	28.2	101	28.9
		5.0	4.1	106	26.7	106	27.4	106	28.0	106	28.4	106	28.7	105	28.9
		7.0	6.0	112	27.3	111	27.9	111	28.5	111	28.8	111	29.2	105	27.2
		9.0	7.9	117	27.8	117	28.4	117	29.0	116	29.1	112	27.9	105	25.7
		11.0	9.8	123	28.3	123	28.9	120	28.5	116	27.4	112	26.3	105	24.2
		13.0	11.8	129	28.8	128	28.9	120	26.8	116	25.8	112	24.8	105	22.8
		15.0	13.7	135	29.3	128	27.3	120	25.3	116	24.4	112	23.4	105	21.6
110	880 (99.00)	-19.8	-20.0	60.7	19.1	60.5	20.2	60.3	21.3	60.2	21.8	60.1	22.4	59.9	23.5
		-18.8	-19.0	61.8	19.5	61.6	20.5	61.4	21.6	61.3	22.1	61.2	22.7	61.1	23.8
		-16.7	-17.0	64.2	20.2	64.0	21.2	63.8	22.3	63.7	22.8	63.7	23.3	63.5	24.3
		-13.7	-15.0	66.9	21.0	66.7	22.0	66.5	23.0	66.4	23.4	66.3	23.9	66.1	24.9
		-11.8	-13.0	69.9	21.8	69.7	22.7	69.5	23.6	69.4	24.1	69.3	24.6	69.1	25.5
		-9.8	-11.0	73.1	22.5	72.9	23.4	72.7	24.3	72.6	24.8	72.5	25.2	72.3	26.1
		-9.5	-10.0	74.8	22.9	74.6	23.8	74.4	24.7	74.3	25.1	74.2	25.5	74.0	26.4
		-8.5	-9.1	76.4	23.2	76.2	24.1	76.0	25.0	75.9	25.4	75.8	25.8	75.6	26.7
		-7.0	-7.6	79.2	23.8	79.0	24.6	78.8	25.5	78.7	25.9	78.6	26.3	78.4	27.1
		-5.0	-5.6	83.1	24.5	82.9	25.3	82.7	26.1	82.6	26.5	82.5	26.9	82.3	27.7
		-3.0	-3.7	87.1	25.2	86.9	25.9	86.7	26.7	86.6	27.1	86.5	27.4	86.3	28.2
		0.0	-0.7	93.9	26.2	93.7	26.9	93.5	27.6	93.5	27.9	93.4	28.3	93.2	29.0
		3.0	2.2	101	27.1	101	27.7	101	28.4	101	28.7	101	29.0	95.9	27.6
		5.0	4.1	106	27.7	106	28.3	106	28.9	106	29.2	103	28.4	95.9	26.0
		7.0	6.0	111	28.2	111	28.8	110	29.0	106	27.8	103	26.7	95.9	24.5
		9.0	7.9	117	28.7	117	29.2	110	27.3	106	26.2	103	25.2	95.9	23.2
		11.0	9.8	123	29.2	117	27.7	110	25.7	106	24.7	103	23.8	95.9	21.9
		13.0	11.8	124	27.9	117	26.0	110	24.2	106	23.3	103	22.4	95.9	20.6
		15.0	13.7	124	26.4	117	24.6	110	22.8	106	22.0	103	21.2	95.9	19.5
100	800 (90.00)	-19.8	-20.0	60.4	20.8	60.2	21.8	60.1	22.8	60.0	23.3	59.9	23.8	59.7	24.8
		-18.8	-19.0	61.5	21.2	61.3	22.1	61.2	23.1	61.1	23.6	61.0	24.1	60.8	25.1
		-16.7	-17.0	63.9	21.9	63.7	22.8	63.6	23.7	63.5	24.2	63.4	24.7	63.2	25.6
		-13.7	-15.0	66.6	22.6	66.4	23.5	66.2	24.3	66.2	24.8	66.1	25.2	65.9	26.1
		-11.8	-13.0	69.5	23.3	69.4	24.1	69.2	25.0	69.1	25.4	69.0	25.8	68.8	26.7
		-9.8	-11.0	72.8	24.0	72.6	24.8	72.4	25.6	72.3	26.0	72.2	26.4	72.1	27.2
		-9.5	-10.0	74.5	24.3	74.3	25.1	74.1	25.9	74.0	26.3	73.9	26.7	73.8	27.5
		-8.5	-9.1	76.1	24.6	75.9	25.4	75.7	26.2	75.6	26.6	75.5	27.0	75.4	27.7
		-7.0	-7.6	78.9	25.1	78.7	25.9	78.5	26.6	78.4	27.0	78.3	27.4	78.2	28.1
		-5.0	-5.6	82.8	25.8	82.6	26.5	82.5	27.2	82.4	27.6	82.3	27.9	82.1	28.7
		-3.0	-3.7	86.8	26.4	86.6	27.1	86.5	27.8	86.4	28.1	86.3	28.4	86.1	29.1
		0.0	-0.7	93.6	27.3	93.4	27.9	93.3	28.6	93.2	28.9	93.1	29.2	87.1	27.0
		3.0	2.2	101	28.1	101	28.7	100	29.1	96.8	28.0	93.6	26.8	87.1	24.7
		5.0	4.1	106	28.6	106	29.2	100	27.4	96.8	26.3	93.6	25.3	87.1	23.3
		7.0	6.0	111	29.1	106	27.8	100	25.8	96.8	24.8	93.6	23.8	87.1	22.0
		9.0	7.9	113	28.1	106	26.2	100	24.3	96.8	23.4	93.6	22.5	87.1	20.7
		11.0	9.8	113	26.5	106	24.7	100	23.0	96.8	22.1	93.6	21.3	87.1	19.6
		13.0	11.8	113	24.9	106	23.3	100	21.6	96.8	20.8	93.6	20.1	87.1	18.5
		15.0	13.7	113	23.5	106	22.0	100	20.5	96.8	19.7	93.6	19.0	87.1	17.6

4TW31482-2A

NOTES - ANMERKUNGEN - Σημειώσεις - NOTAS - REMARQUES - NOTE - OPMERKINGEN - примечания - NOTLAR

1 is shown as reference. When selecting the unit models, avoid the Outdoor air temperature range shown by .

dient als Verweis. Vermeiden Sie bei der Auswahl der Gerätemodelle den als markierten Temperaturbereich der Außenluft

Η είναι ενδεικτική. κατά την επιλογή των μοντέλων των μονάδων, αποφύγετε το εύρος θερμοκρασίας εξωτερικού αέρα που υποδεικνύεται

se muestra como referencia. Cuando seleccione los modelos de unidad, evite el intervalo de temperaturas del aire exterior indicado mediante

est montré comme référence.Lors du choix des modèles d'unités, évitez la plage de températures de l'air extérieur illustré par

valori riportati unicamente come riferimento. Nel selezionare i modelli delle unità, non considerare i valori di temperatura dell'aria esterna indicati con il colore

is als referentie getoond. Wanneer modellen van eenheden worden gekozen, vermijd dan het bereik van buitenluchttemperaturen geïllustreerd door

показан как. При выборе модели устройства избегайте внешнюю температуру воздуха, указанную в

referans olarak gösterilmektedir. Ünite modellerini seçerken, belirtilen Dış hava sıcaklığı aralığından kaçının

2 The above table shows the average value of conditions which may occur.

Die obige Tabelle zeigt den Durchschnittswert der Bedingungen, die auftreten können.

Στον παραπάνω πίνακα αναγράφεται η μέση τιμή για συνθήκες που μπορεί να προκύψουν.

La tabla de arriba muestra el valor medio de condiciones que pueden ocurrir.

Le tableau ci-dessus donne la valeur moyenne pour des conditions qui peuvent survenir.

La tabella in alto mostra il valore delle condizioni medie che si possono riscontrare.

De tabel hierboven geeft de gemiddelde waarde aan van situaties die kunnen voorvallen.

Таблица расположенная выше показывает среднее значение условий, которые могут наступить.

Yukarıdaki tablo meydana gelebilecek koşulların ortalama değerini göstermektedir.

4 Capacity tables

4 - 3 Heating capacity tables

REYQ32P8

TC: Total Capacity: kW ; PI: Power Input: kW (compressor + outdoor fan motor)

Combination (%)	Capacity index (kW)	Outdoor air temp.		Indoor air temperature: °CDB											
				16.0		18.0		20.0		21.0		22.0		24.0	
				TC	PI	TC	PI	TC	PI	TC	PI	TC	PI	TC	PI
		°CDB	°CWB	kW	kW	kW	kW	kW	kW	kW	kW	kW	kW	kW	kW
90%	720 (81.00)	-19.8	-20.0	60.1	22.6	59.9	23.5	59.8	24.4	59.7	24.8	59.6	25.3	59.5	26.2
		-18.8	-19.0	61.2	22.9	61.0	23.8	60.9	24.6	60.8	25.1	60.7	25.5	60.6	26.4
		-16.7	-17.0	63.6	23.5	63.5	24.3	63.3	25.2	63.2	25.6	63.1	26.0	63.0	26.9
		-13.7	-15.0	66.3	24.1	66.1	24.9	66.0	25.7	65.9	26.2	65.8	26.6	65.7	27.4
		-11.8	-13.0	69.2	24.8	69.1	25.5	68.9	26.3	68.8	26.7	68.8	27.1	68.6	27.9
		-9.8	-11.0	72.5	25.4	72.3	26.1	72.1	26.9	72.1	27.2	72.0	27.6	71.8	28.3
		-9.5	-10.0	74.2	25.7	74.0	26.4	73.8	27.2	73.8	27.5	73.7	27.9	73.5	28.6
		-8.5	-9.1	75.8	26.0	75.6	26.7	75.4	27.4	75.4	27.8	75.3	28.1	75.1	28.8
		-7.0	-7.6	78.5	26.5	78.4	27.1	78.2	27.8	78.2	28.1	78.1	28.5	77.9	29.2
		-5.0	-5.6	82.5	27.0	82.3	27.7	82.2	28.3	82.1	28.7	82.0	29.0	78.4	27.7
		-3.0	-3.7	86.5	27.6	86.3	28.2	86.2	28.8	86.1	29.1	84.2	28.5	78.4	26.1
		0.0	-0.7	93.3	28.4	93.2	29.0	90.0	28.1	87.1	27.0	84.2	25.9	78.4	23.8
		3.0	2.2	100	29.2	95.8	27.6	90.0	25.6	87.1	24.6	84.2	23.7	78.4	21.8
		5.0	4.1	102	27.9	95.8	26.0	90.0	24.1	87.1	23.2	84.2	22.3	78.4	20.6
		7.0	6.0	102	26.3	95.8	24.5	90.0	22.8	87.1	21.9	84.2	21.1	78.4	19.5
		9.0	7.9	102	24.8	95.8	23.1	90.0	21.5	87.1	20.7	84.2	20.0	78.4	18.4
		11.0	9.8	102	23.4	95.8	21.8	90.0	20.3	87.1	19.6	84.2	18.9	78.4	17.5
		13.0	11.8	102	22.0	95.8	20.6	90.0	19.2	87.1	18.5	84.2	17.8	78.4	16.5
		15.0	13.7	102	20.8	95.8	19.5	90.0	18.2	87.1	17.6	84.2	16.9	78.4	15.7
80%	640 (72.00)	-19.8	-20.0	59.8	24.3	59.7	25.1	59.5	25.9	59.4	26.3	59.4	26.7	59.2	27.5
		-18.8	-19.0	60.9	24.6	60.8	25.4	60.6	26.2	60.5	26.5	60.5	26.9	60.3	27.7
		-16.7	-17.0	63.3	25.1	63.2	25.9	63.0	26.6	63.0	27.0	62.9	27.4	62.7	28.1
		-13.7	-15.0	66.0	25.7	65.8	26.4	65.7	27.1	65.6	27.5	65.6	27.9	65.4	28.6
		-11.8	-13.0	68.9	26.3	68.8	27.0	68.6	27.6	68.6	28.0	68.5	28.3	68.4	29.0
		-9.8	-11.0	72.1	26.8	72.0	27.5	71.9	28.1	71.8	28.5	71.7	28.8	69.7	28.3
		-9.5	-10.0	73.9	27.1	73.7	27.8	73.6	28.4	73.5	28.7	73.4	29.0	69.7	27.4
		-8.5	-9.1	75.5	27.4	75.3	28.0	75.2	28.6	75.1	28.9	74.9	29.1	69.7	26.7
		-7.0	-7.6	78.2	27.8	78.1	28.4	78.0	29.0	77.4	29.0	74.9	27.8	69.7	25.6
		-5.0	-5.6	82.2	28.3	82.0	28.9	80.0	28.4	77.4	27.3	74.9	26.2	69.7	24.1
		-3.0	-3.7	86.2	28.8	85.1	28.9	80.0	26.8	77.4	25.7	74.9	24.7	69.7	22.7
		0.0	-0.7	90.3	28.2	85.1	26.3	80.0	24.4	77.4	23.5	74.9	22.6	69.7	20.8
		3.0	2.2	90.3	25.7	85.1	24.0	80.0	22.3	77.4	21.5	74.9	20.7	69.7	19.1
		5.0	4.1	90.3	24.2	85.1	22.6	80.0	21.1	77.4	20.3	74.9	19.5	69.7	18.0
		7.0	6.0	90.3	22.9	85.1	21.4	80.0	19.9	77.4	19.2	74.9	18.5	69.7	17.1
		9.0	7.9	90.3	21.6	85.1	20.2	80.0	18.8	77.4	18.2	74.9	17.5	69.7	16.2
		11.0	9.8	90.3	20.4	85.1	19.1	80.0	17.8	77.4	17.2	74.9	16.6	69.7	15.4
		13.0	11.8	90.3	19.3	85.1	18.1	80.0	16.9	77.4	16.3	74.9	15.7	69.7	14.6
		15.0	13.7	90.3	18.3	85.1	17.1	80.0	16.0	77.4	15.5	74.9	14.9	69.7	13.9
70%	560 (63.00)	-19.8	-20.0	59.5	26.1	59.4	26.8	59.2	27.5	59.2	27.8	59.1	28.2	59.0	28.9
		-18.8	-19.0	60.6	26.3	60.5	27.0	60.3	27.7	60.3	28.0	60.2	28.4	60.1	29.0
		-16.7	-17.0	63.0	26.8	62.9	27.4	62.7	28.1	62.7	28.4	62.6	28.8	61.0	28.3
		-13.7	-15.0	65.7	27.3	65.5	27.9	65.4	28.5	65.4	28.9	65.3	29.2	61.0	26.9
		-11.8	-13.0	68.6	27.8	68.5	28.4	68.4	29.0	67.8	28.9	65.5	27.7	61.0	25.5
		-9.8	-11.0	71.8	28.3	71.7	28.8	70.0	28.4	67.8	27.3	65.5	26.2	61.0	24.1
		-9.5	-10.0	73.5	28.5	73.4	29.1	70.0	27.6	67.8	26.5	65.5	25.5	61.0	23.4
		-8.5	-9.1	75.1	28.7	74.5	29.0	70.0	26.9	67.8	25.8	65.5	24.8	61.0	22.8
		-7.0	-7.6	77.9	29.1	74.5	27.7	70.0	25.7	67.8	24.7	65.5	23.7	61.0	21.8
		-5.0	-5.6	79.0	27.9	74.5	26.0	70.0	24.2	67.8	23.3	65.5	22.4	61.0	20.6
		-3.0	-3.7	79.0	26.3	74.5	24.6	70.0	22.8	67.8	22.0	65.5	21.2	61.0	19.5
		0.0	-0.7	79.0	24.0	74.5	22.4	70.0	20.9	67.8	20.1	65.5	19.4	61.0	17.9
		3.0	2.2	79.0	22.0	74.5	20.6	70.0	19.2	67.8	18.5	65.5	17.8	61.0	16.5
		5.0	4.1	79.0	20.8	74.5	19.4	70.0	18.1	67.8	17.5	65.5	16.9	61.0	15.6
		7.0	6.0	79.0	19.6	74.5	18.4	70.0	17.2	67.8	16.6	65.5	16.0	61.0	14.8
		9.0	7.9	79.0	18.6	74.5	17.4	70.0	16.3	67.8	15.7	65.5	15.2	61.0	14.1
		11.0	9.8	79.0	17.6	74.5	16.5	70.0	15.4	67.8	14.9	65.5	14.4	61.0	13.4
		13.0	11.8	79.0	16.6	74.5	15.6	70.0	14.6	67.8	14.1	65.5	13.7	61.0	12.7
		15.0	13.7	79.0	15.8	74.5	14.8	70.0	13.9	67.8	13.4	65.5	13.0	61.0	12.1
60%	480 (54.00)	-19.8	-20.0	59.2	27.8	59.1	28.4	59.0	29.0	58.1	28.7	56.1	27.5	52.3	25.3
		-18.8	-19.0	60.3	28.0	60.2	28.6	60.0	29.1	58.1	28.0	56.1	26.9	52.3	24.7
		-16.7	-17.0	62.7	28.4	62.6	29.0	60.0	27.7	58.1	26.7	56.1	25.6	52.3	23.5
		-13.7	-15.0	65.4	28.9	63.9	28.4	60.0	26.4	58.1	25.3	56.1	24.3	52.3	22.4
		-11.8	-13.0	67.7	28.9	63.9	26.9	60.0	25.0	58.1	24.0	56.1	23.1	52.3	21.3
		-9.8	-11.0	67.7	27.3	63.9	25.4	60.0	23.6	58.1	22.7	56.1	21.9	52.3	20.2
		-9.5	-10.0	67.7	26.5	63.9	24.7	60.0	23.0	58.1	22.1	56.1	21.3	52.3	19.6
		-8.5	-9.1	67.7	25.8	63.9	24.1	60.0	22.4	58.1	21.6	56.1	20.7	52.3	19.1
		-7.0	-7.6	67.7	24.7	63.9	23.0	60.0	21.4	58.1	20.7	56.1	19.9	52.3	18.4
		-5.0	-5.6	67.7	23.3	63.9	21.7	60.0	20.2	58.1	19.5	56.1	18.8	52.3	17.4
		-3.0	-3.7	67.7	22.0	63.9	20.5	60.0	19.2	58.1	18.5	56.1	17.8	52.3	16.5
		0.0	-0.7	67.7	20.1	63.9	18.8	60.0	17.6	58.1	17.0	56.1	16.3	52.3	15.1
		3.0	2.2	67.7	18.5	63.9	17.3	60.0	16.2	58.1	15.6	56.1	15.1	52.3	14.0
		5.0	4.1	67.7	17.5	63.9	16.4	60.0	15.3	58.1	14.8	56.1	14.3	52.3	13.3
		7.0	6.0	67.7	16.6	63.9	15.5	60.0	14.6	58.1	14.1	56.1	13.6	52.3	12.6
		9.0	7.9	67.7	15.7	63.9	14.8	60.0	13.8	58.1	13.4	56.1	12.9	52.3	12.0
		11.0	9.8	67.7	14.9	63.9	14.0	60.0	13.2	58.1	12.7	56.1	12.3	52.3	11.5
		13.0	11.8	67.7	14.1	63.9	13.3	60.0	12.5	58.1	12.1	56.1	11.7	52.3	10.9
		15.0	13.7	67.7	13.4	63.9	12.7	60.0	11.9	58.1	11.5	56.1	11.2	52.3	10.4
50%	400 (45.00)	-19.8	-20.0	56.4	27.7	53.2	25.8	50.0	23.9	48.4	23.0	46.8	22.2	43.6	20.4
		-18.8	-19.0	56.4	27.0	53.2	25.2	50.0	23.4	48.4	22.5	46.8	21.7	43.6	20.0
		-16.7	-17.0	56.4	25.8	53.2	24.0	50.0	22.4	48.4	21.5	46.8	20.7	43.6	19.1
		-13.7	-15.0	56.4	24.5	53.2	22.9	50.0	21.3	48.4	20.5	46.8	19.7	43.6	18.2
		-11.8	-13.0	56.4	23.2	53.2	21.7	50.0	20.2	48.4	19.5	46.8	18.8	43.6	17.3
		-9.8	-11.0	56.4	22.0	53.2	20.6	50.0	19.2	48.4	18.5	46.8	17.8	43.6	16.5
		-9.5	-10.0	56.4	21.4	53.2	20.0	50.0	18.7	48.4	18.0	46.8	17.3	43.6	16.0
		-8.5	-9.1	56.4	20.9	53.2	19.5	50.0	18.2	48.4	17.6	46.8	16.9	43.6	15.7
		-7.0	-7.6	56.4	20.0	53.2	18.7	50.0	17.5	48.4	16.9	46.8	16.3	43.6	15.1
		-5.0	-5.6	56.4	18.9	53.2	17.7	50.0	16.5	48.4	16.0	46.8	15.4	43.6	14.3
		-3.0	-3.7	56.4	17.9	53.2	16.8	50.0	15.7	48.4	15.2	46.8	14.6	43.6	13.6
		0.0	-0.7	56.4	16.4	53.2	15.4	50.0	14.5	48.4	14.0	46.8	13.5	43.6	12.6
		3.0	2.2	56.4	15.2	53.2	14.2	50.0	13.4	48.4	12.9	46.8	12.5	43.6	11.6
		5.0	4.1	56.4	14.4	53.2	13.5	50.0	12.7	48.4	12.3	46.8	11.9	43.6	11.1
		7.0	6.0	56.4	13.7	53.2	12.9	50.0	12.1	48.4	11.7	46.8	11.3	43.6	10.6
		9.0	7.9	56.4	13.0	53.2	12.2	50.0	11.5	48.4	11.2	46.8	10.8	43.6	10.1
		11.0	9.8	56.4	12.4	53.2	11.7	50.0	11.0	48.4	10.6	46.8	10.3	43.6	9.64
		13.0	11.8	56.4	11.7	53.2	11.1	50.0	10.5	48.4	10.1	46.8	9.82	43.6	9.20
		15.0	13.7	56.4	11.2	53.2	10.6	50.0	9.99	48.4	9.69	46.8	9.39	43.6	8.80

4TW31482-2A

4 Capacity tables

4 - 3 Heating capacity tables

REYQ34P9

TC: Total Capacity: kW ; PI: Power Input: kW (compressor + outdoor fan motor)

Combination (%)	Capacity index (kW)	Outdoor air temp.		Indoor air temperature: °CDB											
				16.0		18.0		20.0		21.0		22.0		24.0	
				TC	PI	TC	PI	TC	PI	TC	PI	TC	PI	TC	PI
		°CDB	°CWB	kW	kW	kW	kW	kW	kW	kW	kW	kW	kW	kW	kW
130	1105 (124.02)	-19.8	-20.0	67.3	17.0	67.0	18.3	66.8	19.6	66.7	20.3	66.5	20.9	66.3	22.2
		-18.8	-19.0	68.7	17.5	68.4	18.8	68.2	20.0	68.0	20.7	67.9	21.3	67.7	22.6
		-16.7	-17.0	71.6	18.5	71.4	19.7	71.1	20.9	71.0	21.5	70.9	22.1	70.6	23.4
		-13.7	-15.0	74.8	19.4	74.5	20.6	74.3	21.8	74.2	22.4	74.0	22.9	73.8	24.1
		-11.8	-13.0	78.2	20.4	77.9	21.5	77.7	22.6	77.6	23.2	77.4	23.7	77.2	24.9
		-9.8	-11.0	81.8	21.3	81.6	22.4	81.3	23.4	81.2	24.0	81.1	24.5	80.8	25.6
		-9.5	-10.0	83.7	21.8	83.5	22.8	83.2	23.8	83.1	24.4	83.0	24.9	82.7	25.9
		-8.5	-9.1	85.5	22.2	85.2	23.2	85.0	24.2	84.9	24.7	84.8	25.2	84.5	26.2
		-7.0	-7.6	88.5	22.8	88.3	23.8	88.0	24.8	87.9	25.3	87.8	25.8	87.6	26.7
		-5.0	-5.6	92.8	23.7	92.6	24.6	92.3	25.5	92.2	26.0	92.1	26.5	91.8	27.4
		-3.0	-3.7	97.1	24.4	96.8	25.3	96.6	26.2	96.5	26.6	96.3	27.1	96.1	28.0
		0.0	-0.7	104	25.5	104	26.4	104	27.2	104	27.6	104	28.0	103	28.9
		3.0	2.2	112	26.6	111	27.3	111	28.1	111	28.5	111	28.9	111	29.6
		5.0	4.1	117	27.2	117	27.9	116	28.7	116	29.0	116	29.4	116	30.1
		7.0	6.0	122	27.8	122	28.5	122	29.2	122	29.5	121	29.9	121	30.6
		9.0	7.9	128	28.3	127	29.0	127	29.7	127	30.0	127	30.3	121	28.9
		11.0	9.8	133	28.9	133	29.5	133	30.1	133	30.5	130	29.8	121	27.4
		13.0	11.8	140	29.4	140	30.0	139	30.6	135	29.4	130	28.2	121	25.9
		15.0	13.7	146	29.9	146	30.5	139	28.9	135	27.8	130	26.7	121	24.5
120	1020 (114.48)	-19.8	-20.0	66.9	18.8	66.7	20.0	66.5	21.2	66.4	21.8	66.3	22.4	66.0	23.6
		-18.8	-19.0	68.3	19.2	68.1	20.4	67.9	21.6	67.8	22.2	67.7	22.8	67.4	23.9
		-16.7	-17.0	71.3	20.1	71.0	21.3	70.8	22.4	70.7	22.9	70.6	23.5	70.4	24.6
		-13.7	-15.0	74.4	21.0	74.2	22.1	74.0	23.2	73.9	23.7	73.8	24.3	73.5	25.3
		-11.8	-13.0	77.8	21.9	77.6	22.9	77.4	24.0	77.3	24.5	77.2	25.0	76.9	26.0
		-9.8	-11.0	81.5	22.8	81.3	23.7	81.0	24.7	80.9	25.2	80.8	25.7	80.6	26.7
		-9.5	-10.0	83.4	23.2	83.2	24.1	82.9	25.1	82.8	25.6	82.7	26.0	82.5	27.0
		-8.5	-9.1	85.2	23.5	84.9	24.5	84.7	25.4	84.6	25.9	84.5	26.4	84.3	27.3
		-7.0	-7.6	88.2	24.1	88.0	25.0	87.8	26.0	87.6	26.4	87.5	26.9	87.3	27.8
		-5.0	-5.6	92.5	24.9	92.2	25.8	92.0	26.6	91.9	27.1	91.8	27.5	91.6	28.4
		-3.0	-3.7	96.7	25.6	96.5	26.4	96.3	27.3	96.2	27.7	96.1	28.1	95.8	28.9
		0.0	-0.7	104	26.7	104	27.4	103	28.2	103	28.6	103	28.9	103	29.7
		3.0	2.2	111	27.6	111	28.3	111	29.0	111	29.4	111	29.7	110	30.4
		5.0	4.1	116	28.2	116	28.9	116	29.5	116	29.9	116	30.2	112	29.4
		7.0	6.0	122	28.7	122	29.4	121	30.0	121	30.3	120	30.3	112	27.8
		9.0	7.9	127	29.2	127	29.9	127	30.5	124	29.8	120	28.6	112	26.3
		11.0	9.8	133	29.7	133	30.3	128	29.4	124	28.2	120	27.1	112	24.9
		13.0	11.8	139	30.2	137	29.9	128	27.7	124	26.6	120	25.6	112	23.5
		15.0	13.7	145	30.4	137	28.3	128	26.3	124	25.3	120	24.3	112	22.4
110	935 (104.94)	-19.8	-20.0	66.6	20.5	66.4	21.6	66.2	22.7	66.1	23.3	66.0	23.8	65.8	24.9
		-18.8	-19.0	68.0	20.9	67.8	22.0	67.6	23.1	67.5	23.6	67.4	24.2	67.2	25.3
		-16.7	-17.0	70.9	21.8	70.7	22.8	70.5	23.8	70.4	24.4	70.3	24.9	70.1	25.9
		-13.7	-15.0	74.1	22.6	73.9	23.6	73.7	24.6	73.6	25.1	73.5	25.6	73.3	26.6
		-11.8	-13.0	77.5	23.4	77.3	24.4	77.1	25.3	77.0	25.8	76.9	26.2	76.7	27.2
		-9.8	-11.0	81.2	24.2	80.9	25.1	80.7	26.0	80.6	26.4	80.5	26.9	80.3	27.8
		-9.5	-10.0	83.1	24.6	82.9	25.5	82.6	26.3	82.5	26.8	82.4	27.2	82.2	28.1
		-8.5	-9.1	84.8	24.9	84.6	25.8	84.4	26.6	84.3	27.1	84.2	27.5	84.0	28.4
		-7.0	-7.6	87.9	25.5	87.7	26.3	87.5	27.1	87.4	27.5	87.3	28.0	87.0	28.8
		-5.0	-5.6	92.1	26.2	91.9	27.0	91.7	27.8	91.6	28.1	91.5	28.5	91.3	29.3
		-3.0	-3.7	96.4	26.8	96.2	27.6	96.0	28.3	95.9	28.7	95.8	29.1	95.6	29.8
		0.0	-0.7	104	27.8	103	28.5	103	29.2	103	29.5	103	29.9	103	30.5
		3.0	2.2	111	28.6	111	29.3	111	29.9	110	30.3	110	30.5	103	27.9
		5.0	4.1	116	29.2	116	29.8	116	30.4	114	30.0	110	28.8	103	26.4
		7.0	6.0	121	29.7	121	30.3	118	29.5	114	28.4	110	27.2	103	25.0
		9.0	7.9	127	30.1	125	30.1	118	27.9	114	26.8	110	25.8	103	23.7
		11.0	9.8	133	30.6	125	28.5	118	26.4	114	25.4	110	24.4	103	22.5
		13.0	11.8	133	28.9	125	26.9	118	25.0	114	24.0	110	23.1	103	21.3
		15.0	13.7	133	27.4	125	25.5	118	23.7	114	22.8	110	21.9	103	20.2
100	850 (95.40)	-19.8	-20.0	66.3	22.3	66.1	23.3	65.9	24.3	65.8	24.8	65.7	25.3	65.5	26.3
		-18.8	-19.0	67.7	22.7	67.5	23.7	67.3	24.6	67.2	25.1	67.1	25.6	66.9	26.6
		-16.7	-17.0	70.6	23.4	70.4	24.4	70.2	25.3	70.1	25.8	70.0	26.3	69.9	27.2
		-13.7	-15.0	73.8	24.2	73.6	25.1	73.4	26.0	73.3	26.4	73.2	26.9	73.0	27.8
		-11.8	-13.0	77.2	24.9	77.0	25.8	76.8	26.6	76.7	27.1	76.6	27.5	76.4	28.4
		-9.8	-11.0	80.8	25.6	80.6	26.4	80.4	27.3	80.4	27.7	80.3	28.1	80.1	28.9
		-9.5	-10.0	82.7	26.0	82.5	26.8	82.4	27.6	82.3	28.0	82.2	28.4	82.0	29.2
		-8.5	-9.1	84.5	26.3	84.3	27.1	84.1	27.9	84.0	28.2	83.9	28.6	83.7	29.4
		-7.0	-7.6	87.5	26.8	87.4	27.5	87.2	28.3	87.1	28.7	87.0	29.1	86.8	29.8
		-5.0	-5.6	91.8	27.4	91.6	28.2	91.4	28.9	91.3	29.2	91.2	29.6	91.1	30.3
		-3.0	-3.7	96.1	28.0	95.9	28.7	95.7	29.4	95.6	29.7	95.5	30.1	93.2	29.7
		0.0	-0.7	103	28.9	103	29.5	103	30.2	103	30.5	100	29.6	93.2	27.2
		3.0	2.2	111	29.7	110	30.3	107	29.4	104	28.3	100	27.1	93.2	24.9
		5.0	4.1	116	30.2	114	30.0	107	27.8	104	26.7	100	25.7	93.2	23.6
		7.0	6.0	121	30.5	114	28.3	107	26.3	104	25.3	100	24.3	93.2	22.4
		9.0	7.9	121	28.8	114	26.8	107	24.9	104	24.0	100	23.0	93.2	21.2
		11.0	9.8	121	27.2	114	25.4	107	23.6	104	22.7	100	21.9	93.2	20.2
		13.0	11.8	121	25.7	114	24.0	107	22.3	104	21.5	100	20.7	93.2	19.1
		15.0	13.7	121	24.4	114	22.8	107	21.2	104	20.5	100	19.7	93.2	18.2

4TW31482-2A

NOTES - ANMERKUNGEN - Σημειώσεις - NOTAS - REMARQUES - NOTE - OPMERKINGEN - примечания - NOTLAR

1 is shown as reference. When selecting the unit models, avoid the Outdoor air temperature range shown by .

dient als Verweis. Vermeiden Sie bei der Auswahl der Gerätemodelle den als markierten Temperaturbereich der Außenluft

Η είναι ενδεικτική. κατά την επιλογή των μοντέλων των μονάδων, αποφύγετε το εύρος θερμοκρασίας εξωτερικού αέρα που υποδεικνύεται

se muestra como referencia. Cuando seleccione los modelos de unidad, evite el intervalo de temperaturas del aire exterior indicado mediante

est montré comme référence.Lors du choix des modèles d'unités, évitez la plage de températures de l'air extérieur illustré par

valori riportati unicamente come riferimento. Nel selezionare i modelli delle unità, non considerare i valori di temperatura dell'aria esterna indicati con il colore

is als referentie getoond. Wanneer modellen van eenheden worden gekozen, vermijd dan het bereik van buitenluchttemperaturen geïllustreerd door

показан как. При выборе модели устройства избегайте внешнюю температуру воздуха, указанную в

referans olarak gösterilmektedir. Ünite modellerini seçerken, belirtilen Dış hava sıcaklığı aralığından kaçının

2 The above table shows the average value of conditions which may occur.

Die obige Tabelle zeigt den Durchschnittswert der Bedingungen, die auftreten können.

Στον παραπάνω πίνακα αναγράφεται η μέση τιμή για συνθήκες που μπορεί να προκύψουν.

La tabla de arriba muestra el valor medio de condiciones que pueden ocurrir.

Le tableau ci-dessus donne la valeur moyenne pour des conditions qui peuvent survenir.

La tabella in alto mostra il valore delle condizioni medie che si possono riscontrare.

De tabel hierboven geeft de gemiddelde waarde aan van situaties die kunnen voorvallen.

Таблица расположенная выше показывает среднее значение условий, которые могут наступить.

Yukarıdaki tablo meydana gelebilecek koşulların ortalama değerini göstermektedir.

4 Capacity tables

4 - 3 Heating capacity tables

REYQ34P9

TC: Total Capacity: kW ; PI: Power Input: kW (compressor + outdoor fan motor)

Combination (%)	Capacity index (kW)	Outdoor air temp.		Indoor air temperature: °CDB											
				16.0		18.0		20.0		21.0		22.0		24.0	
				TC	PI	TC	PI	TC	PI	TC	PI	TC	PI	TC	PI
		°CDB	°CWB	kW	kW	kW	kW	kW	kW	kW	kW	kW	kW	kW	kW
90%	765 (85.86)	-19.8	-20.0	66.0	24.1	65.8	25.0	65.6	25.9	65.5	26.3	65.4	26.8	65.3	27.7
		-18.8	-19.0	67.3	24.4	67.2	25.3	67.0	26.2	66.9	26.6	66.8	27.1	66.7	27.9
		-16.7	-17.0	70.3	25.1	70.1	25.9	69.9	26.8	69.9	27.2	69.8	27.6	69.6	28.5
		-13.7	-15.0	73.4	25.8	73.3	26.6	73.1	27.4	73.0	27.8	72.9	28.2	72.8	29.0
		-11.8	-13.0	76.9	26.4	76.7	27.2	76.5	28.0	76.4	28.4	76.3	28.7	76.2	29.5
		-9.8	-11.0	80.5	27.1	80.3	27.8	80.2	28.5	80.1	28.9	80.0	29.3	79.8	30.0
		-9.5	-10.0	82.4	27.4	82.2	28.1	82.1	28.8	82.0	29.2	81.9	29.5	81.7	30.3
		-8.5	-9.1	84.2	27.7	84.0	28.4	83.8	29.1	83.7	29.4	83.7	29.8	83.5	30.5
		-7.0	-7.6	87.2	28.1	87.0	28.8	86.9	29.5	86.8	29.8	86.7	30.1	83.9	29.4
		-5.0	-5.6	91.5	28.7	91.3	29.3	91.1	30.0	91.1	30.3	90.1	30.2	83.9	27.7
		-3.0	-3.7	95.8	29.2	95.6	29.8	95.4	30.5	93.2	29.7	90.1	28.5	83.9	26.2
		0.0	-0.7	103	30.0	102	30.5	96.3	28.2	93.2	27.1	90.1	26.1	83.9	24.0
		3.0	2.2	109	30.0	102	27.9	96.3	25.9	93.2	24.9	90.1	24.0	83.9	22.1
		5.0	4.1	109	28.3	102	26.4	96.3	24.5	93.2	23.6	90.1	22.7	83.9	20.9
		7.0	6.0	109	26.8	102	25.0	96.3	23.2	93.2	22.4	90.1	21.5	83.9	19.8
		9.0	7.9	109	25.4	102	23.7	96.3	22.0	93.2	21.2	90.1	20.4	83.9	18.9
		11.0	9.8	109	24.0	102	22.5	96.3	20.9	93.2	20.2	90.1	19.4	83.9	17.9
		13.0	11.8	109	22.8	102	21.3	96.3	19.8	93.2	19.1	90.1	18.4	83.9	17.0
		15.0	13.7	109	21.6	102	20.2	96.3	18.9	93.2	18.2	90.1	17.5	83.9	16.2
80%	680 (76.32)	-19.8	-20.0	65.6	25.8	65.5	26.6	65.3	27.4	65.2	27.8	65.2	28.2	65.0	29.0
		-18.8	-19.0	67.0	26.1	66.9	26.9	66.7	27.7	66.6	28.1	66.6	28.5	66.4	29.3
		-16.7	-17.0	69.9	26.7	69.8	27.5	69.6	28.2	69.6	28.6	69.5	29.0	69.3	29.8
		-13.7	-15.0	73.1	27.3	73.0	28.1	72.8	28.8	72.7	29.1	72.7	29.5	72.5	30.2
		-11.8	-13.0	76.5	27.9	76.4	28.6	76.2	29.3	76.1	29.7	76.1	30.0	74.6	29.8
		-9.8	-11.0	80.2	28.5	80.0	29.2	79.9	29.8	79.8	30.1	79.7	30.5	74.6	28.2
		-9.5	-10.0	82.1	28.8	81.9	29.4	81.8	30.1	81.7	30.4	80.1	29.8	74.6	27.3
		-8.5	-9.1	83.8	29.0	83.7	29.7	83.5	30.3	82.9	30.2	80.1	29.0	74.6	26.6
		-7.0	-7.6	86.9	29.4	86.7	30.0	85.6	30.1	82.9	28.9	80.1	27.8	74.6	25.5
		-5.0	-5.6	91.1	30.0	91.0	30.5	85.6	28.3	82.9	27.2	80.1	26.2	74.6	24.1
		-3.0	-3.7	95.4	30.4	91.1	28.9	85.6	26.8	82.9	25.8	80.1	24.7	74.6	22.8
		0.0	-0.7	96.6	28.3	91.1	26.4	85.6	24.5	82.9	23.6	80.1	22.7	74.6	20.9
		3.0	2.2	96.6	26.0	91.1	24.3	85.6	22.6	82.9	21.7	80.1	20.9	74.6	19.3
		5.0	4.1	96.6	24.6	91.1	23.0	85.6	21.4	82.9	20.6	80.1	19.8	74.6	18.3
		7.0	6.0	96.6	23.3	91.1	21.8	85.6	20.3	82.9	19.6	80.1	18.8	74.6	17.4
		9.0	7.9	96.6	22.1	91.1	20.7	85.6	19.3	82.9	18.6	80.1	17.9	74.6	16.6
		11.0	9.8	96.6	21.0	91.1	19.6	85.6	18.3	82.9	17.7	80.1	17.0	74.6	15.8
		13.0	11.8	96.6	19.9	91.1	18.6	85.6	17.4	82.9	16.8	80.1	16.2	74.6	15.0
		15.0	13.7	96.6	18.9	91.1	17.7	85.6	16.6	82.9	16.0	80.1	15.4	74.6	14.3
70%	595 (66.78)	-19.8	-20.0	65.3	27.6	65.2	28.3	65.0	29.0	65.0	29.4	64.9	29.7	64.8	30.4
		-18.8	-19.0	66.7	27.9	66.5	28.5	66.4	29.2	66.3	29.6	66.3	29.9	65.3	30.0
		-16.7	-17.0	69.6	28.4	69.5	29.1	69.4	29.7	69.3	30.0	69.2	30.4	65.3	28.4
		-13.7	-15.0	72.8	28.9	72.7	29.6	72.5	30.2	72.5	30.5	70.1	29.3	65.3	26.9
		-11.8	-13.0	76.2	29.4	76.1	30.0	74.9	30.0	72.5	28.8	70.1	27.7	65.3	25.4
		-9.8	-11.0	79.8	29.9	79.7	30.5	74.9	28.3	72.5	27.2	70.1	26.1	65.3	24.0
		-9.5	-10.0	81.7	30.2	79.7	29.6	74.9	27.5	72.5	26.4	70.1	25.4	65.3	23.3
		-8.5	-9.1	83.5	30.4	79.7	28.9	74.9	26.8	72.5	25.7	70.1	24.7	65.3	22.8
		-7.0	-7.6	84.5	29.6	79.7	27.6	74.9	25.6	72.5	24.6	70.1	23.7	65.3	21.8
		-5.0	-5.6	84.5	27.9	79.7	26.0	74.9	24.2	72.5	23.3	70.1	22.4	65.3	20.6
		-3.0	-3.7	84.5	26.4	79.7	24.6	74.9	22.9	72.5	22.0	70.1	21.2	65.3	19.6
		0.0	-0.7	84.5	24.2	79.7	22.6	74.9	21.0	72.5	20.2	70.1	19.5	65.3	18.0
		3.0	2.2	84.5	22.2	79.7	20.8	74.9	19.4	72.5	18.7	70.1	18.0	65.3	16.7
		5.0	4.1	84.5	21.1	79.7	19.7	74.9	18.4	72.5	17.8	70.1	17.1	65.3	15.9
		7.0	6.0	84.5	20.0	79.7	18.7	74.9	17.5	72.5	16.9	70.1	16.3	65.3	15.1
		9.0	7.9	84.5	19.0	79.7	17.8	74.9	16.6	72.5	16.1	70.1	15.5	65.3	14.4
		11.0	9.8	84.5	18.1	79.7	17.0	74.9	15.9	72.5	15.3	70.1	14.8	65.3	13.7
		13.0	11.8	84.5	17.2	79.7	16.1	74.9	15.1	72.5	14.6	70.1	14.1	65.3	13.1
		15.0	13.7	84.5	16.4	79.7	15.4	74.9	14.4	72.5	13.9	70.1	13.5	65.3	12.5
60%	510 (57.24)	-19.8	-20.0	65.0	29.4	64.9	30.0	64.2	30.2	62.1	29.0	60.1	27.8	56.0	25.5
		-18.8	-19.0	66.3	29.6	66.2	30.2	64.2	29.4	62.1	28.2	60.1	27.1	56.0	24.9
		-16.7	-17.0	69.3	30.1	68.3	30.0	64.2	27.8	62.1	26.8	60.1	25.7	56.0	23.6
		-13.7	-15.0	72.5	30.5	68.3	28.4	64.2	26.3	62.1	25.3	60.1	24.3	56.0	22.4
		-11.8	-13.0	72.5	28.8	68.3	26.8	64.2	24.9	62.1	24.0	60.1	23.0	56.0	21.2
		-9.8	-11.0	72.5	27.2	68.3	25.3	64.2	23.5	62.1	22.7	60.1	21.8	56.0	20.1
		-9.5	-10.0	72.5	26.4	68.3	24.6	64.2	22.9	62.1	22.0	60.1	21.2	56.0	19.6
		-8.5	-9.1	72.5	25.7	68.3	24.0	64.2	22.3	62.1	21.5	60.1	20.7	56.0	19.1
		-7.0	-7.6	72.5	24.6	68.3	23.0	64.2	21.4	62.1	20.6	60.1	19.8	56.0	18.3
		-5.0	-5.6	72.5	23.2	68.3	21.7	64.2	20.2	62.1	19.5	60.1	18.8	56.0	17.4
		-3.0	-3.7	72.5	22.0	68.3	20.6	64.2	19.2	62.1	18.5	60.1	17.8	56.0	16.5
		0.0	-0.7	72.5	20.2	68.3	18.9	64.2	17.7	62.1	17.1	60.1	16.5	56.0	15.3
		3.0	2.2	72.5	18.7	68.3	17.5	64.2	16.4	62.1	15.8	60.1	15.3	56.0	14.2
		5.0	4.1	72.5	17.7	68.3	16.7	64.2	15.6	62.1	15.1	60.1	14.5	56.0	13.5
		7.0	6.0	72.5	16.9	68.3	15.8	64.2	14.8	62.1	14.3	60.1	13.9	56.0	12.9
		9.0	7.9	72.5	16.1	68.3	15.1	64.2	14.2	62.1	13.7	60.1	13.2	56.0	12.3
		11.0	9.8	72.5	15.3	68.3	14.4	64.2	13.5	62.1	13.1	60.1	12.6	56.0	11.8
		13.0	11.8	72.5	14.6	68.3	13.7	64.2	12.9	62.1	12.5	60.1	12.1	56.0	11.2
		15.0	13.7	72.5	13.9	68.3	13.1	64.2	12.3	62.1	11.9	60.1	11.5	56.0	10.8
50%	425 (47.70)	-19.8	-20.0	60.4	28.0	56.9	26.1	53.5	24.2	51.8	23.3	50.1	22.4	46.6	20.7
		-18.8	-19.0	60.4	27.3	56.9	25.4	53.5	23.6	51.8	22.7	50.1	21.9	46.6	20.2
		-16.7	-17.0	60.4	25.9	56.9	24.1	53.5	22.4	51.8	21.6	50.1	20.8	46.6	19.2
		-13.7	-15.0	60.4	24.5	56.9	22.9	53.5	21.3	51.8	20.5	50.1	19.7	46.6	18.2
		-11.8	-13.0	60.4	23.2	56.9	21.7	53.5	20.2	51.8	19.5	50.1	18.7	46.6	17.3
		-9.8	-11.0	60.4	21.9	56.9	20.5	53.5	19.1	51.8	18.4	50.1	17.8	46.6	16.5
		-9.5	-10.0	60.4	21.3	56.9	20.0	53.5	18.6	51.8	18.0	50.1	17.3	46.6	16.0
		-8.5	-9.1	60.4	20.8	56.9	19.5	53.5	18.2	51.8	17.5	50.1	16.9	46.6	15.7
		-7.0	-7.6	60.4	20.0	56.9	18.7	53.5	17.5	51.8	16.8	50.1	16.2	46.6	15.1
		-5.0	-5.6	60.4	18.9	56.9	17.7	53.5	16.5	51.8	16.0	50.1	15.4	46.6	14.3
		-3.0	-3.7	60.4	17.9	56.9	16.8	53.5	15.7	51.8	15.2	50.1	14.7	46.6	13.6
		0.0	-0.7	60.4	16.5	56.9	15.5	53.5	14.6	51.8	14.1	50.1	13.6	46.6	12.7
		3.0	2.2	60.4	15.3	56.9	14.4	53.5	13.5	51.8	13.1	50.1	12.7	46.6	11.8
		5.0	4.1	60.4	14.6	56.9	13.7	53.5	12.9	51.8	12.5	50.1	12.1	46.6	11.3
		7.0	6.0	60.4	13.9	56.9	13.1	53.5	12.3	51.8	11.9	50.1	11.5	46.6	10.8
		9.0	7.9	60.4	13.3	56.9	12.5	53.5	11.8	51.8	11.4	50.1	11.0	46.6	10.3
		11.0	9.8	60.4	12.7	56.9	12.0	53.5	11.3	51.8	10.9	50.1	10.6	46.6	9.89
		13.0	11.8	60.4	12.1	56.9	11.4	53.5	10.8	51.8	10.4	50.1	10.1	46.6	9.47
		15.0	13.7	60.4	11.6	56.9	11.0	53.5	10.3	51.8	10.0	50.1	9.71	46.6	9.10

4TW31482-2A

4 Capacity tables

4 - 3 Heating capacity tables

REYQ36P9

TC: Total Capacity: kW ; PI: Power Input: kW (compressor + outdoor fan motor)

Combination (%)	Capacity index (kW)	Outdoor air temp.		Indoor air temperature: °CDB											
				16.0		18.0		20.0		21.0		22.0		24.0	
				TC	PI	TC	PI	TC	PI	TC	PI	TC	PI	TC	PI
		°CDB	°CWB	kW	kW	kW	kW	kW	kW	kW	kW	kW	kW	kW	kW
130	1170 (131.30)	-19.8	-20.0	67.6	15.6	67.4	17.0	67.1	18.4	67.0	19.1	66.9	19.8	66.6	21.2
		-18.8	-19.0	69.0	16.1	68.8	17.5	68.5	18.9	68.4	19.6	68.2	20.2	68.0	21.6
		-16.7	-17.0	71.9	17.2	71.7	18.5	71.4	19.8	71.3	20.5	71.2	21.1	70.9	22.4
		-13.7	-15.0	75.1	18.2	74.9	19.5	74.6	20.7	74.5	21.4	74.3	22.0	74.1	23.2
		-11.8	-13.0	78.5	19.2	78.3	20.4	78.0	21.6	77.9	22.2	77.7	22.8	77.5	24.0
		-9.8	-11.0	82.2	20.2	81.9	21.4	81.6	22.5	81.5	23.1	81.4	23.6	81.1	24.8
		-9.5	-10.0	84.1	20.7	83.8	21.8	83.5	22.9	83.4	23.5	83.3	24.0	83.0	25.2
		-8.5	-9.1	85.8	21.1	85.6	22.2	85.3	23.3	85.2	23.9	85.1	24.4	84.8	25.5
		-7.0	-7.6	88.9	21.8	88.6	22.9	88.4	23.9	88.2	24.5	88.1	25.0	87.9	26.0
		-5.0	-5.6	93.2	22.7	92.9	23.7	92.7	24.7	92.5	25.2	92.4	25.7	92.1	26.7
		-3.0	-3.7	97.5	23.5	97.2	24.5	96.9	25.4	96.8	25.9	96.7	26.4	96.4	27.4
		0.0	-0.7	105	24.8	104	25.6	104	26.5	104	27.0	104	27.4	104	28.3
		3.0	2.2	112	25.8	112	26.7	112	27.5	112	27.9	111	28.3	111	29.1
		5.0	4.1	117	26.5	117	27.3	117	28.1	117	28.5	117	28.9	116	29.7
		7.0	6.0	123	27.2	122	27.9	122	28.7	122	29.0	122	29.4	122	30.1
		9.0	7.9	128	27.8	128	28.5	128	29.2	128	29.5	128	29.9	127	30.6
		11.0	9.8	134	28.3	134	29.0	134	29.7	133	30.0	133	30.4	128	29.2
		13.0	11.8	140	28.9	140	29.5	140	30.2	140	30.5	137	30.1	128	27.6
		15.0	13.7	147	29.4	146	30.0	146	30.7	142	29.7	137	28.5	128	26.2
120	1080 (121.20)	-19.8	-20.0	67.3	17.5	67.1	18.8	66.8	20.1	66.7	20.7	66.6	21.4	66.3	22.7
		-18.8	-19.0	68.7	18.0	68.4	19.3	68.2	20.5	68.1	21.2	68.0	21.8	67.7	23.0
		-16.7	-17.0	71.6	19.0	71.4	20.2	71.1	21.4	71.0	22.0	70.9	22.6	70.6	23.8
		-13.7	-15.0	74.8	19.9	74.5	21.1	74.3	22.2	74.2	22.8	74.0	23.4	73.8	24.5
		-11.8	-13.0	78.2	20.9	77.9	22.0	77.7	23.1	77.6	23.6	77.4	24.2	77.2	25.3
		-9.8	-11.0	81.8	21.8	81.6	22.8	81.3	23.9	81.2	24.4	81.1	24.9	80.8	26.0
		-9.5	-10.0	83.7	22.2	83.5	23.2	83.2	24.3	83.1	24.8	83.0	25.3	82.8	26.3
		-8.5	-9.1	85.5	22.6	85.2	23.6	85.0	24.6	84.9	25.1	84.8	25.6	84.5	26.6
		-7.0	-7.6	88.5	23.3	88.3	24.2	88.1	25.2	87.9	25.7	87.8	26.2	87.6	27.1
		-5.0	-5.6	92.8	24.1	92.6	25.0	92.3	25.9	92.2	26.4	92.1	26.8	91.9	27.8
		-3.0	-3.7	97.1	24.8	96.9	25.7	96.6	26.6	96.5	27.0	96.4	27.5	96.2	28.3
		0.0	-0.7	104	26.0	104	26.8	104	27.6	104	28.0	104	28.4	103	29.2
		3.0	2.2	112	27.0	112	27.7	111	28.5	111	28.9	111	29.2	111	30.0
		5.0	4.1	117	27.6	117	28.3	116	29.0	116	29.4	116	29.8	116	30.5
		7.0	6.0	122	28.2	122	28.9	122	29.5	122	29.9	122	30.2	118	29.7
		9.0	7.9	128	28.7	128	29.4	127	30.0	127	30.4	127	30.6	118	28.1
		11.0	9.8	134	29.2	134	29.9	133	30.5	131	30.1	127	28.9	118	26.6
		13.0	11.8	140	29.8	140	30.4	136	29.6	131	28.4	127	27.3	118	25.1
		15.0	13.7	146	30.2	144	30.2	136	28.0	131	27.0	127	25.9	118	23.9
110	990 (111.10)	-19.8	-20.0	67.0	19.4	66.7	20.6	66.5	21.8	66.4	22.4	66.3	22.9	66.1	24.1
		-18.8	-19.0	68.3	19.8	68.1	21.0	67.9	22.2	67.8	22.7	67.7	23.3	67.4	24.5
		-16.7	-17.0	71.2	20.7	71.0	21.8	70.8	22.9	70.7	23.5	70.6	24.1	70.4	25.2
		-13.7	-15.0	74.4	21.6	74.2	22.7	74.0	23.7	73.9	24.3	73.8	24.8	73.5	25.8
		-11.8	-13.0	77.8	22.5	77.6	23.5	77.4	24.5	77.3	25.0	77.2	25.5	76.9	26.5
		-9.8	-11.0	81.5	23.3	81.2	24.3	81.0	25.2	80.9	25.7	80.8	26.2	80.6	27.2
		-9.5	-10.0	83.4	23.7	83.1	24.7	82.9	25.6	82.8	26.1	82.7	26.5	82.5	27.5
		-8.5	-9.1	85.1	24.1	84.9	25.0	84.7	25.9	84.6	26.4	84.5	26.8	84.3	27.8
		-7.0	-7.6	88.2	24.7	88.0	25.6	87.8	26.4	87.6	26.9	87.5	27.3	87.3	28.2
		-5.0	-5.6	92.5	25.4	92.3	26.3	92.0	27.1	91.9	27.5	91.8	28.0	91.6	28.8
		-3.0	-3.7	96.8	26.1	96.5	26.9	96.3	27.7	96.2	28.1	96.1	28.5	95.9	29.3
		0.0	-0.7	104	27.1	104	27.9	104	28.6	103	29.0	103	29.4	103	30.1
		3.0	2.2	111	28.1	111	28.8	111	29.5	111	29.8	111	30.2	108	29.9
		5.0	4.1	117	28.6	116	29.3	116	30.0	116	30.3	116	30.6	108	28.2
		7.0	6.0	122	29.2	122	29.8	122	30.4	120	30.3	116	29.1	108	26.7
		9.0	7.9	128	29.7	127	30.3	124	29.8	120	28.7	116	27.5	108	25.3
		11.0	9.8	133	30.2	132	30.4	124	28.2	120	27.1	116	26.1	108	24.0
		13.0	11.8	140	30.7	132	28.7	124	26.7	120	25.7	116	24.7	108	22.7
		15.0	13.7	140	29.2	132	27.2	124	25.3	120	24.4	116	23.4	108	21.6
100	900 (101.00)	-19.8	-20.0	66.6	21.3	66.4	22.4	66.2	23.4	66.1	24.0	66.0	24.5	65.8	25.6
		-18.8	-19.0	68.0	21.7	67.8	22.7	67.6	23.8	67.5	24.3	67.4	24.9	67.2	25.9
		-16.7	-17.0	70.9	22.5	70.7	23.5	70.5	24.5	70.4	25.0	70.3	25.5	70.1	26.5
		-13.7	-15.0	74.1	23.3	73.9	24.3	73.7	25.2	73.6	25.7	73.5	26.2	73.3	27.2
		-11.8	-13.0	77.5	24.1	77.3	25.0	77.1	25.9	77.0	26.4	76.9	26.8	76.7	27.8
		-9.8	-11.0	81.1	24.8	80.9	25.7	80.7	26.6	80.6	27.0	80.5	27.5	80.3	28.3
		-9.5	-10.0	83.0	25.2	82.8	26.1	82.6	26.9	82.5	27.4	82.4	27.8	82.2	28.6
		-8.5	-9.1	84.8	25.5	84.6	26.4	84.4	27.2	84.3	27.6	84.2	28.1	84.0	28.9
		-7.0	-7.6	87.8	26.1	87.6	26.9	87.4	27.7	87.3	28.1	87.2	28.5	87.0	29.3
		-5.0	-5.6	92.1	26.8	91.9	27.5	91.7	28.3	91.6	28.7	91.5	29.1	91.3	29.8
		-3.0	-3.7	96.4	27.4	96.2	28.1	96.0	28.9	95.9	29.2	95.8	29.6	95.6	30.3
		0.0	-0.7	104	28.3	103	29.0	103	29.7	103	30.0	103	30.4	98.5	29.0
		3.0	2.2	111	29.2	111	29.8	111	30.4	109	30.2	106	29.0	98.5	26.7
		5.0	4.1	116	29.7	116	30.3	113	29.7	109	28.6	106	27.4	98.5	25.2
		7.0	6.0	122	30.2	120	30.3	113	28.1	109	27.0	106	26.0	98.5	23.9
		9.0	7.9	127	30.7	120	28.6	113	26.6	109	25.6	106	24.6	98.5	22.7
		11.0	9.8	128	29.1	120	27.1	113	25.2	109	24.3	106	23.3	98.5	21.5
		13.0	11.8	128	27.5	120	25.6	113	23.9	109	23.0	106	22.1	98.5	20.4
		15.0	13.7	128	26.1	120	24.3	113	22.7	109	21.8	106	21.0	98.5	19.4

4TW31482-2A

NOTES - ANMERKUNGEN - Σημειώσεις - NOTAS - REMARQUES - NOTE - OPMERKINGEN - примечания - NOTLAR

1 is shown as reference. When selecting the unit models, avoid the Outdoor air temperature range shown by .

dient als Verweis. Vermeiden Sie bei der Auswahl der Gerätemodelle den als markierten Temperaturbereich der Außenluft

Η είναι ενδεικτική. κατά την επιλογή των μοντέλων των μονάδων, αποφύγετε το εύρος θερμοκρασίας εξωτερικού αέρα που υποδεικνύεται

se muestra como referencia. Cuando seleccione los modelos de unidad, evite el intervalo de temperaturas del aire exterior indicado mediante

est montré comme référence.Lors du choix des modèles d'unités, évitez la plage de températures de l'air extérieur illustré par

valori riportati unicamente come riferimento. Nel selezionare i modelli delle unità, non considerare i valori di temperatura dell'aria esterna indicati con il colore

is als referentie getoond. Wanneer modellen van eenheden worden gekozen, vermijd dan het bereik van buitenluchttemperaturen geïllustreerd door

показан как. При выборе модели устройства избегайте внешнюю температуру воздуха, указанную в

referans olarak gösterilmektedir. Ünite modellerini seçerken, belirtilen Dış hava sıcaklığı aralığından kaçının

2 The above table shows the average value of conditions which may occur.

Die obige Tabelle zeigt den Durchschnittswert der Bedingungen, die auftreten können.

Στον παραπάνω πίνακα αναγράφεται η μέση τιμή για συνθήκες που μπορεί να προκύψουν.

La tabla de arriba muestra el valor medio de condiciones que pueden ocurrir.

Le tableau ci-dessus donne la valeur moyenne pour des conditions qui peuvent survenir.

La tabella in alto mostra il valore delle condizioni medie che si possono riscontrare.

De tabel hierboven geeft de gemiddelde waarde aan van situaties die kunnen voorvallen.

Таблица расположенная выше показывает среднее значение условий, которые могут наступить.

Yukarıdaki tablo meydana gelebilecek koşulların ortalama değerini göstermektedir.

4 Capacity tables

4 - 3 Heating capacity tables

REYQ36P9

TC: Total Capacity: kW ; PI: Power Input: kW (compressor + outdoor fan motor)

Combination (%)	Capacity index (kW)	Outdoor air temp.		Indoor air temperature: °CDB											
				16.0		18.0		20.0		21.0		22.0		24.0	
				TC	PI	TC	PI	TC	PI	TC	PI	TC	PI	TC	PI
		°CDB	°CWB	kW	kW	kW	kW	kW	kW	kW	kW	kW	kW	kW	kW
90%	810	-19.8	-20.0	66.3	23.2	66.1	24.1	65.9	25.1	65.8	25.6	65.7	26.1	65.5	27.1
	(90.90)	-18.8	-19.0	67.6	23.5	67.4	24.5	67.3	25.4	67.2	25.9	67.1	26.4	66.9	27.3
		-16.7	-17.0	70.6	24.3	70.4	25.2	70.2	26.1	70.1	26.5	70.0	27.0	69.8	27.9
		-13.7	-15.0	73.7	25.0	73.5	25.9	73.4	26.7	73.3	27.2	73.2	27.6	73.0	28.5
		-11.8	-13.0	77.1	25.7	76.9	26.5	76.8	27.4	76.7	27.8	76.6	28.2	76.4	29.0
		-9.8	-11.0	80.8	26.4	80.6	27.2	80.4	28.0	80.3	28.4	80.2	28.7	80.0	29.5
		-9.5	-10.0	82.7	26.7	82.5	27.5	82.3	28.3	82.2	28.6	82.1	29.0	82.0	29.8
		-8.5	-9.1	84.4	27.0	84.3	27.8	84.1	28.5	84.0	28.9	83.9	29.3	83.7	30.0
		-7.0	-7.6	87.5	27.5	87.3	28.2	87.1	29.0	87.0	29.3	87.0	29.7	86.8	30.4
		-5.0	-5.6	91.8	28.1	91.6	28.8	91.4	29.5	91.3	29.9	91.2	30.2	88.6	29.6
		-3.0	-3.7	96.1	28.7	95.9	29.3	95.7	30.0	95.6	30.3	95.2	30.5	88.6	28.0
		0.0	-0.7	103	29.5	103	30.1	102	30.2	98.4	29.0	95.2	27.9	88.6	25.6
		3.0	2.2	111	30.3	108	29.8	102	27.7	98.4	26.6	95.2	25.6	88.6	23.6
		5.0	4.1	115	30.3	108	28.2	102	26.2	98.4	25.2	95.2	24.2	88.6	22.3
		7.0	6.0	115	28.6	108	26.7	102	24.8	98.4	23.9	95.2	23.0	88.6	21.2
		9.0	7.9	115	27.1	108	25.3	102	23.5	98.4	22.7	95.2	21.8	88.6	20.1
		11.0	9.8	115	25.7	108	24.0	102	22.3	98.4	21.5	95.2	20.7	88.6	19.1
		13.0	11.8	115	24.3	108	22.7	102	21.2	98.4	20.4	95.2	19.6	88.6	18.2
		15.0	13.7	115	23.1	108	21.6	102	20.1	98.4	19.4	95.2	18.7	88.6	17.3
80%	720	-19.8	-20.0	65.9	25.1	65.7	25.9	65.6	26.8	65.5	27.2	65.4	27.6	65.3	28.5
	(80.80)	-18.8	-19.0	67.3	25.4	67.1	26.2	67.0	27.1	66.9	27.5	66.8	27.9	66.6	28.8
		-16.7	-17.0	70.2	26.0	70.0	26.8	69.9	27.7	69.8	28.1	69.7	28.5	69.6	29.3
		-13.7	-15.0	73.4	26.7	73.2	27.5	73.0	28.2	73.0	28.6	72.9	29.0	72.7	29.8
		-11.8	-13.0	76.8	27.3	76.6	28.0	76.4	28.8	76.4	29.1	76.3	29.5	76.1	30.3
		-9.8	-11.0	80.4	27.9	80.2	28.6	80.1	29.3	80.0	29.7	79.9	30.0	78.8	30.1
		-9.5	-10.0	82.3	28.2	82.2	28.9	82.0	29.6	81.9	29.9	81.8	30.3	78.8	29.3
		-8.5	-9.1	84.1	28.5	83.9	29.2	83.8	29.8	83.7	30.2	83.6	30.5	78.8	28.5
		-7.0	-7.6	87.1	28.9	87.0	29.6	86.8	30.2	86.7	30.5	84.6	29.7	78.8	27.3
		-5.0	-5.6	91.4	29.5	91.3	30.1	90.4	30.3	87.5	29.2	84.6	28.0	78.8	25.7
		-3.0	-3.7	95.7	30.0	95.6	30.6	90.4	28.7	87.5	27.6	84.6	26.5	78.8	24.4
		0.0	-0.7	102	30.3	96.2	28.2	90.4	26.2	87.5	25.2	84.6	24.3	78.8	22.4
		3.0	2.2	102	27.8	96.2	25.9	90.4	24.1	87.5	23.2	84.6	22.3	78.8	20.6
		5.0	4.1	102	26.3	96.2	24.6	90.4	22.9	87.5	22.0	84.6	21.2	78.8	19.6
		7.0	6.0	102	24.9	96.2	23.3	90.4	21.7	87.5	20.9	84.6	20.1	78.8	18.6
		9.0	7.9	102	23.6	96.2	22.1	90.4	20.6	87.5	19.9	84.6	19.1	78.8	17.7
		11.0	9.8	102	22.4	96.2	21.0	90.4	19.6	87.5	18.9	84.6	18.2	78.8	16.9
		13.0	11.8	102	21.2	96.2	19.9	90.4	18.6	87.5	17.9	84.6	17.3	78.8	16.0
		15.0	13.7	102	20.2	96.2	18.9	90.4	17.7	87.5	17.1	84.6	16.5	78.8	15.3
70%	630	-19.8	-20.0	65.6	27.0	65.4	27.7	65.3	28.5	65.2	28.8	65.1	29.2	65.0	30.0
	(70.70)	-18.8	-19.0	66.9	27.2	66.8	28.0	66.6	28.7	66.6	29.1	66.5	29.5	66.4	30.2
		-16.7	-17.0	69.9	27.8	69.7	28.5	69.6	29.2	69.5	29.6	69.4	29.9	68.9	30.4
		-13.7	-15.0	73.0	28.4	72.9	29.0	72.7	29.7	72.7	30.1	72.6	30.4	68.9	28.8
		-11.8	-13.0	76.4	28.9	76.3	29.6	76.1	30.2	76.1	30.5	74.0	29.6	68.9	27.2
		-9.8	-11.0	80.1	29.5	79.9	30.1	79.1	30.3	76.6	29.1	74.0	28.0	68.9	25.7
		-9.5	-10.0	82.0	29.7	81.8	30.3	79.1	29.4	76.6	28.3	74.0	27.2	68.9	25.0
		-8.5	-9.1	83.7	30.0	83.6	30.5	79.1	28.6	76.6	27.5	74.0	26.5	68.9	24.3
		-7.0	-7.6	86.8	30.3	84.2	29.5	79.1	27.4	76.6	26.4	74.0	25.3	68.9	23.3
		-5.0	-5.6	89.3	29.9	84.2	27.8	79.1	25.9	76.6	24.9	74.0	23.9	68.9	22.1
		-3.0	-3.7	89.3	28.2	84.2	26.3	79.1	24.5	76.6	23.6	74.0	22.7	68.9	20.9
		0.0	-0.7	89.3	25.8	84.2	24.1	79.1	22.5	76.6	21.7	74.0	20.8	68.9	19.3
		3.0	2.2	89.3	23.8	84.2	22.2	79.1	20.7	76.6	20.0	74.0	19.3	68.9	17.8
		5.0	4.1	89.3	22.5	84.2	21.1	79.1	19.7	76.6	19.0	74.0	18.3	68.9	16.9
		7.0	6.0	89.3	21.4	84.2	20.0	79.1	18.7	76.6	18.0	74.0	17.4	68.9	16.1
		9.0	7.9	89.3	20.3	84.2	19.0	79.1	17.8	76.6	17.2	74.0	16.6	68.9	15.4
		11.0	9.8	89.3	19.3	84.2	18.1	79.1	16.9	76.6	16.4	74.0	15.8	68.9	14.7
		13.0	11.8	89.3	18.3	84.2	17.2	79.1	16.1	76.6	15.6	74.0	15.0	68.9	14.0
		15.0	13.7	89.3	17.5	84.2	16.4	79.1	15.4	76.6	14.9	74.0	14.4	68.9	13.4
60%	540	-19.8	-20.0	65.2	28.8	65.1	29.5	65.0	30.1	64.9	30.5	63.4	29.7	59.1	27.3
	(60.60)	-18.8	-19.0	66.6	29.1	66.5	29.7	66.3	30.4	65.6	30.2	63.4	29.0	59.1	26.6
		-16.7	-17.0	69.5	29.6	69.4	30.2	67.8	29.8	65.6	28.6	63.4	27.5	59.1	25.3
		-13.7	-15.0	72.7	30.1	72.2	30.4	67.8	28.2	65.6	27.1	63.4	26.0	59.1	24.0
		-11.8	-13.0	76.1	30.5	72.2	28.7	67.8	26.7	65.6	25.7	63.4	24.7	59.1	22.7
		-9.8	-11.0	76.5	29.1	72.2	27.1	67.8	25.2	65.6	24.3	63.4	23.3	59.1	21.5
		-9.5	-10.0	76.5	28.3	72.2	26.4	67.8	24.5	65.6	23.6	63.4	22.7	59.1	20.9
		-8.5	-9.1	76.5	27.5	72.2	25.7	67.8	23.9	65.6	23.0	63.4	22.1	59.1	20.4
		-7.0	-7.6	76.5	26.4	72.2	24.6	67.8	22.9	65.6	22.1	63.4	21.2	59.1	19.6
		-5.0	-5.6	76.5	24.9	72.2	23.2	67.8	21.7	65.6	20.9	63.4	20.1	59.1	18.6
		-3.0	-3.7	76.5	23.6	72.2	22.0	67.8	20.5	65.6	19.8	63.4	19.1	59.1	17.7
		0.0	-0.7	76.5	21.6	72.2	20.3	67.8	18.9	65.6	18.3	63.4	17.6	59.1	16.3
		3.0	2.2	76.5	20.0	72.2	18.7	67.8	17.5	65.6	16.9	63.4	16.3	59.1	15.1
		5.0	4.1	76.5	19.0	72.2	17.8	67.8	16.7	65.6	16.1	63.4	15.5	59.1	14.4
		7.0	6.0	76.5	18.0	72.2	16.9	67.8	15.9	65.6	15.3	63.4	14.8	59.1	13.8
		9.0	7.9	76.5	17.2	72.2	16.1	67.8	15.1	65.6	14.6	63.4	14.1	59.1	13.1
		11.0	9.8	76.5	16.3	72.2	15.4	67.8	14.4	65.6	14.0	63.4	13.5	59.1	12.6
		13.0	11.8	76.5	15.6	72.2	14.6	67.8	13.7	65.6	13.3	63.4	12.9	59.1	12.0
		15.0	13.7	76.5	14.8	72.2	14.0	67.8	13.1	65.6	12.7	63.4	12.3	59.1	11.5
50%	450	-19.8	-20.0	63.8	29.9	60.1	27.9	56.5	25.9	54.7	24.9	52.9	24.0	49.2	22.1
	(50.50)	-18.8	-19.0	63.8	29.2	60.1	27.2	56.5	25.3	54.7	24.3	52.9	23.4	49.2	21.6
		-16.7	-17.0	63.8	27.7	60.1	25.8	56.5	24.0	54.7	23.1	52.9	22.2	49.2	20.5
		-13.7	-15.0	63.8	26.2	60.1	24.5	56.5	22.8	54.7	21.9	52.9	21.1	49.2	19.5
		-11.8	-13.0	63.8	24.8	60.1	23.2	56.5	21.6	54.7	20.8	52.9	20.0	49.2	18.5
		-9.8	-11.0	63.8	23.5	60.1	21.9	56.5	20.5	54.7	19.7	52.9	19.0	49.2	17.6
		-9.5	-10.0	63.8	22.8	60.1	21.4	56.5	19.9	54.7	19.2	52.9	18.5	49.2	17.2
		-8.5	-9.1	63.8	22.3	60.1	20.8	56.5	19.4	54.7	18.8	52.9	18.1	49.2	16.8
		-7.0	-7.6	63.8	21.4	60.1	20.0	56.5	18.7	54.7	18.0	52.9	17.4	49.2	16.1
		-5.0	-5.6	63.8	20.2	60.1	18.9	56.5	17.7	54.7	17.1	52.9	16.5	49.2	15.3
		-3.0	-3.7	63.8	19.2	60.1	18.0	56.5	16.8	54.7	16.3	52.9	15.7	49.2	14.6
		0.0	-0.7	63.8	17.7	60.1	16.6	56.5	15.6	54.7	15.1	52.9	14.5	49.2	13.5
		3.0	2.2	63.8	16.4	60.1	15.4	56.5	14.5	54.7	14.0	52.9	13.5	49.2	12.6
		5.0	4.1	63.8	15.6	60.1	14.7	56.5	13.8	54.7	13.3	52.9	12.9	49.2	12.0
		7.0	6.0	63.8	14.9	60.1	14.0	56.5	13.2	54.7	12.7	52.9	12.3	49.2	11.5
		9.0	7.9	63.8	14.2	60.1	13.4	56.5	12.6	54.7	12.2	52.9	11.8	49.2	11.0
		11.0	9.8	63.8	13.6	60.1	12.8	56.5	12.0	54.7	11.7	52.9	11.3	49.2	10.6
		13.0	11.8	63.8	12.9	60.1	12.2	56.5	11.5	54.7	11.1	52.9	10.8	49.2	10.1
		15.0	13.7	63.8	12.4	60.1	11.7	56.5	11.0	54.7	10.7	52.9	10.4	49.2	9.71

4TW31482-2A

4 Capacity tables

4 - 3 Heating capacity tables

REYQ38P8

TC: Total Capacity: kW ; PI: Power Input: kW (compressor + outdoor fan motor)

Combination (%)	Capacity index (kW)	Outdoor air temp.		Indoor air temperature: °CDB											
				16.0		18.0		20.0		21.0		22.0		24.0	
				TC	PI	TC	PI	TC	PI	TC	PI	TC	PI	TC	PI
		°CDB	°CWB	kW	kW	kW	kW	kW	kW	kW	kW	kW	kW	kW	kW
130	1235 (139.10)	-19.8	-20.0	71.8	17.3	71.5	18.8	71.2	20.3	71.1	21.1	71.0	21.8	70.7	23.3
		-18.8	-19.0	73.0	17.8	72.8	19.3	72.5	20.8	72.4	21.5	72.2	22.2	72.0	23.7
		-16.7	-17.0	75.8	18.8	75.5	20.2	75.3	21.7	75.1	22.4	75.0	23.1	74.7	24.5
		-13.7	-15.0	78.9	19.9	78.6	21.2	78.3	22.6	78.2	23.3	78.1	23.9	77.8	25.3
		-11.8	-13.0	82.3	20.9	82.0	22.2	81.8	23.5	81.6	24.2	81.5	24.8	81.2	26.1
		-9.8	-11.0	86.1	22.0	85.8	23.2	85.5	24.5	85.4	25.1	85.3	25.7	85.0	27.0
		-9.5	-10.0	88.1	22.5	87.8	23.7	87.5	24.9	87.4	25.5	87.3	26.1	87.0	27.4
		-8.5	-9.1	89.9	23.0	89.7	24.2	89.4	25.4	89.3	25.9	89.1	26.5	88.9	27.7
		-7.0	-7.6	93.2	23.8	92.9	24.9	92.7	26.0	92.5	26.6	92.4	27.2	92.1	28.3
		-5.0	-5.6	97.9	24.8	97.6	25.8	97.3	26.9	97.2	27.5	97.0	28.0	96.8	29.1
		-3.0	-3.7	103	25.7	102	26.7	102	27.8	102	28.3	102	28.8	102	29.8
		0.0	-0.7	111	27.1	110	28.0	110	29.0	110	29.5	110	30.0	110	30.9
		3.0	2.2	119	28.3	119	29.2	119	30.1	118	30.6	118	31.0	118	31.9
		5.0	4.1	125	29.1	125	30.0	125	30.8	124	31.2	124	31.6	124	32.5
		7.0	6.0	131	29.9	131	30.7	131	31.5	131	31.9	131	32.3	130	33.1
		9.0	7.9	138	30.6	138	31.3	137	32.1	137	32.5	137	32.8	135	32.8
		11.0	9.8	145	31.2	145	31.9	144	32.7	144	33.0	144	33.4	135	30.9
		13.0	11.8	152	31.9	152	32.6	152	33.3	150	32.9	145	31.6	135	29.0
		15.0	13.7	160	32.5	160	33.1	155	32.3	150	31.0	145	29.8	135	27.4
120	1140 (128.40)	-19.8	-20.0	71.4	19.3	71.2	20.7	70.9	22.1	70.8	22.8	70.7	23.5	70.4	24.9
		-18.8	-19.0	72.7	19.8	72.4	21.2	72.2	22.5	72.0	23.2	71.9	23.9	71.7	25.3
		-16.7	-17.0	75.4	20.7	75.2	22.0	74.9	23.4	74.8	24.0	74.7	24.7	74.4	26.0
		-13.7	-15.0	78.5	21.7	78.3	23.0	78.0	24.2	77.9	24.8	77.8	25.5	77.5	26.7
		-11.8	-13.0	81.9	22.7	81.7	23.9	81.4	25.1	81.3	25.7	81.2	26.3	80.9	27.5
		-9.8	-11.0	85.7	23.7	85.5	24.8	85.2	26.0	85.1	26.5	84.9	27.1	84.7	28.3
		-9.5	-10.0	87.7	24.1	87.5	25.3	87.2	26.4	87.1	26.9	87.0	27.5	86.7	28.6
		-8.5	-9.1	89.6	24.6	89.3	25.7	89.1	26.8	88.9	27.3	88.8	27.9	88.6	29.0
		-7.0	-7.6	92.8	25.3	92.6	26.4	92.3	27.4	92.2	27.9	92.1	28.5	91.8	29.5
		-5.0	-5.6	97.5	26.2	97.2	27.2	97.0	28.2	96.9	28.7	96.7	29.2	96.5	30.2
		-3.0	-3.7	102	27.1	102	28.0	102	29.0	102	29.5	101	30.0	101	30.9
		0.0	-0.7	110	28.4	110	29.3	110	30.1	110	30.6	110	31.0	109	31.9
		3.0	2.2	119	29.5	119	30.4	118	31.2	118	31.6	118	32.0	118	32.8
		5.0	4.1	125	30.3	125	31.0	124	31.8	124	32.2	124	32.6	124	33.4
		7.0	6.0	131	30.9	131	31.7	131	32.4	130	32.8	130	33.2	124	31.7
		9.0	7.9	138	31.6	137	32.3	137	33.0	137	33.3	134	32.5	124	29.8
		11.0	9.8	144	32.2	144	32.9	143	33.1	138	31.8	134	30.6	124	28.1
		13.0	11.8	152	32.8	152	33.4	143	31.1	138	29.9	134	28.7	124	26.4
		15.0	13.7	159	33.3	152	31.6	143	29.3	138	28.2	134	27.1	124	25.0
110	1045 (117.70)	-19.8	-20.0	71.1	21.4	70.8	22.7	70.6	23.9	70.5	24.6	70.4	25.2	70.1	26.5
		-18.8	-19.0	72.3	21.8	72.1	23.0	71.8	24.3	71.7	24.9	71.6	25.5	71.4	26.8
		-16.7	-17.0	75.1	22.6	74.8	23.9	74.6	25.1	74.5	25.7	74.4	26.3	74.1	27.5
		-13.7	-15.0	78.2	23.5	77.9	24.7	77.7	25.8	77.6	26.4	77.5	27.0	77.2	28.2
		-11.8	-13.0	81.6	24.4	81.3	25.5	81.1	26.6	81.0	27.2	80.9	27.7	80.7	28.8
		-9.8	-11.0	85.3	25.3	85.1	26.4	84.9	27.4	84.8	28.0	84.6	28.5	84.4	29.5
		-9.5	-10.0	87.3	25.8	87.1	26.8	86.9	27.8	86.8	28.4	86.6	28.9	86.4	29.9
		-8.5	-9.1	89.2	26.2	89.0	27.2	88.7	28.2	88.6	28.7	88.5	29.2	88.3	30.2
		-7.0	-7.6	92.5	26.8	92.2	27.8	92.0	28.8	91.9	29.3	91.8	29.7	91.6	30.7
		-5.0	-5.6	97.1	27.7	96.9	28.6	96.7	29.5	96.6	30.0	96.4	30.5	96.2	31.4
		-3.0	-3.7	102	28.5	102	29.4	101	30.2	101	30.7	101	31.1	101	32.0
		0.0	-0.7	110	29.7	110	30.5	109	31.3	109	31.7	109	32.1	109	32.9
		3.0	2.2	118	30.7	118	31.5	118	32.2	118	32.6	118	33.0	114	32.2
		5.0	4.1	124	31.4	124	32.1	124	32.8	124	33.2	122	33.0	114	30.3
		7.0	6.0	131	32.0	130	32.7	130	33.4	127	32.4	122	31.1	114	28.5
		9.0	7.9	137	32.6	137	33.3	131	31.7	127	30.4	122	29.2	114	26.9
		11.0	9.8	144	33.2	139	32.1	131	29.8	127	28.7	122	27.6	114	25.4
		13.0	11.8	148	32.4	139	30.2	131	28.0	127	27.0	122	25.9	114	23.9
		15.0	13.7	148	30.5	139	28.5	131	26.5	127	25.5	122	24.5	114	22.6
100	950 (107.00)	-19.8	-20.0	70.7	23.4	70.5	24.6	70.3	25.7	70.2	26.3	70.1	26.9	69.8	28.0
		-18.8	-19.0	71.9	23.8	71.7	24.9	71.5	26.1	71.4	26.6	71.3	27.2	71.1	28.3
		-16.7	-17.0	74.7	24.6	74.5	25.7	74.3	26.8	74.2	27.3	74.1	27.9	73.9	28.9
		-13.7	-15.0	77.8	25.4	77.6	26.4	77.4	27.5	77.3	28.0	77.2	28.5	77.0	29.6
		-11.8	-13.0	81.2	26.2	81.0	27.2	80.8	28.2	80.7	28.7	80.6	29.2	80.4	30.2
		-9.8	-11.0	85.0	27.0	84.8	28.0	84.5	28.9	84.4	29.4	84.3	29.9	84.1	30.8
		-9.5	-10.0	87.0	27.4	86.8	28.4	86.5	29.3	86.4	29.8	86.3	30.2	86.1	31.2
		-8.5	-9.1	88.8	27.8	88.6	28.7	88.4	29.6	88.3	30.1	88.2	30.5	88.0	31.4
		-7.0	-7.6	92.1	28.4	91.9	29.3	91.7	30.1	91.6	30.6	91.5	31.0	91.3	31.9
		-5.0	-5.6	96.8	29.2	96.6	30.0	96.3	30.8	96.2	31.3	96.1	31.7	95.9	32.5
		-3.0	-3.7	101	29.9	101	30.7	101	31.5	101	31.9	101	32.3	101	33.1
		0.0	-0.7	110	31.0	109	31.7	109	32.4	109	32.8	109	33.2	104	31.5
		3.0	2.2	118	31.9	118	32.6	118	33.3	115	32.6	111	31.3	104	28.7
		5.0	4.1	124	32.5	124	33.2	119	31.9	115	30.6	111	29.4	104	27.1
		7.0	6.0	130	33.1	127	32.3	119	30.0	115	28.9	111	27.7	104	25.5
		9.0	7.9	134	32.7	127	30.4	119	28.3	115	27.2	111	26.1	104	24.1
		11.0	9.8	134	30.7	127	28.7	119	26.7	115	25.7	111	24.7	104	22.8
		13.0	11.8	134	28.9	127	27.0	119	25.1	115	24.2	111	23.3	104	21.5
		15.0	13.7	134	27.3	127	25.5	119	23.7	115	22.9	111	22.0	104	20.3

4TW31482-2A

NOTES - ANMERKUNGEN - Σημειώσεις - NOTAS - REMARQUES - NOTE - OPMERKINGEN - примечания - NOTLAR

1 is shown as reference. When selecting the unit models, avoid the Outdoor air temperature range shown by .

dient als Verweis. Vermeiden Sie bei der Auswahl der Gerätemodelle den als markierten Temperaturbereich der Außenluft

Η είναι ενδεικτική. κατά την επιλογή των μοντέλων των μονάδων, αποφύγετε το εύρος θερμοκρασίας εξωτερικού αέρα που υποδεικνύεται

se muestra como referencia. Cuando seleccione los modelos de unidad, evite el intervalo de temperaturas del aire exterior indicado mediante

est montré comme référence.Lors du choix des modèles d'unités, évitez la plage de températures de l'air extérieur illustré par

valori riportati unicamente come riferimento. Nel selezionare i modelli delle unità, non considerare i valori di temperatura dell'aria esterna indicati con il colore

is als referentie getoond. Wanneer modellen van eenheden worden gekozen, vermijd dan het bereik van buitenluchttemperaturen geïllustreerd door

показан как. При выборе модели устройства избегайте внешнюю температуру воздуха, указанную в

referans olarak gösterilmektedir. Ünite modellerini seçerken, belirtilen Dış hava sıcaklığı aralığından kaçının

2 The above table shows the average value of conditions which may occur.

Die obige Tabelle zeigt den Durchschnittswert der Bedingungen, die auftreten können.

Στον παραπάνω πίνακα αναγράφεται η μέση τιμή για συνθήκες που μπορεί να προκύψουν.

La tabla de arriba muestra el valor medio de condiciones que pueden ocurrir.

Le tableau ci-dessus donne la valeur moyenne pour des conditions qui peuvent survenir.

La tabella in alto mostra il valore delle condizioni medie che si possono riscontrare.

De tabel hierboven geeft de gemiddelde waarde aan van situaties die kunnen voorvallen.

Таблица расположенная выше показывает среднее значение условий, которые могут наступить.

Yukarıdaki tablo meydana gelebilecek koşulların ortalama değerini göstermektedir.

4 Capacity tables

4 - 3 Heating capacity tables

REYQ38P8

TC: Total Capacity: kW ; PI: Power Input: kW (compressor + outdoor fan motor)

Combination (%)	Capacity index (kW)	Outdoor air temp.		Indoor air temperature: °CDB											
				16.0		18.0		20.0		21.0		22.0		24.0	
				TC	PI	TC	PI	TC	PI	TC	PI	TC	PI	TC	PI
		°CDB	°CWB	kW	kW	kW	kW	kW	kW	kW	kW	kW	kW	kW	kW
90%	855 (96.30)	-19.8	-20.0	70.3	25.4	70.1	26.5	69.9	27.5	69.8	28.1	69.8	28.6	69.6	29.6
		-18.8	-19.0	71.6	25.8	71.4	26.8	71.2	27.8	71.1	28.3	71.0	28.9	70.8	29.9
		-16.7	-17.0	74.3	26.5	74.1	27.5	74.0	28.5	73.9	29.0	73.8	29.4	73.6	30.4
		-13.7	-15.0	77.4	27.2	77.2	28.2	77.0	29.1	77.0	29.6	76.9	30.1	76.7	31.0
		-11.8	-13.0	80.8	28.0	80.7	28.9	80.5	29.8	80.4	30.2	80.3	30.7	80.1	31.6
		-9.8	-11.0	84.6	28.7	84.4	29.6	84.2	30.4	84.1	30.9	84.0	31.3	83.8	32.1
		-9.5	-10.0	86.6	29.1	86.4	29.9	86.2	30.7	86.1	31.2	86.0	31.6	85.8	32.4
		-8.5	-9.1	88.5	29.4	88.3	30.2	88.1	31.0	88.0	31.4	87.9	31.9	87.7	32.7
		-7.0	-7.6	91.7	29.9	91.6	30.7	91.4	31.5	91.3	31.9	91.2	32.3	91.0	33.1
		-5.0	-5.6	96.4	30.6	96.2	31.4	96.0	32.1	95.9	32.5	95.8	32.9	93.3	32.4
		-3.0	-3.7	101	31.3	101	32.0	101	32.7	101	33.1	100	33.3	93.3	30.5
		0.0	-0.7	109	32.3	109	32.9	107	32.7	104	31.5	100	30.2	93.3	27.8
		3.0	2.2	118	33.1	114	32.2	107	29.8	104	28.7	100	27.6	93.3	25.4
		5.0	4.1	121	32.5	114	30.3	107	28.1	104	27.1	100	26.0	93.3	24.0
		7.0	6.0	121	30.6	114	28.5	107	26.5	104	25.5	100	24.5	93.3	22.6
		9.0	7.9	121	28.8	114	26.9	107	25.0	104	24.1	100	23.2	93.3	21.4
		11.0	9.8	121	27.1	114	25.4	107	23.6	104	22.8	100	21.9	93.3	20.3
		13.0	11.8	121	25.5	114	23.9	107	22.3	104	21.5	100	20.7	93.3	19.1
		15.0	13.7	121	24.1	114	22.6	107	21.1	104	20.3	100	19.6	93.3	18.2
80%	760 (85.60)	-19.8	-20.0	69.9	27.5	69.8	28.4	69.6	29.3	69.5	29.8	69.4	30.3	69.3	31.2
		-18.8	-19.0	71.2	27.8	71.0	28.7	70.9	29.6	70.8	30.1	70.7	30.5	70.5	31.4
		-16.7	-17.0	74.0	28.4	73.8	29.3	73.6	30.2	73.5	30.6	73.5	31.0	73.3	31.9
		-13.7	-15.0	77.1	29.1	76.9	29.9	76.7	30.7	76.6	31.2	76.6	31.6	76.4	32.4
		-11.8	-13.0	80.5	29.7	80.3	30.5	80.1	31.3	80.1	31.7	80.0	32.1	79.8	32.9
		-9.8	-11.0	84.2	30.4	84.1	31.1	83.9	31.9	83.8	32.3	83.7	32.7	83.0	33.1
		-9.5	-10.0	86.2	30.7	86.1	31.5	85.9	32.2	85.8	32.6	85.7	32.9	83.0	32.1
		-8.5	-9.1	88.1	31.0	87.9	31.7	87.8	32.5	87.7	32.8	87.6	33.2	83.0	31.3
		-7.0	-7.6	91.4	31.5	91.2	32.2	91.0	32.9	91.0	33.2	89.1	32.6	83.0	29.9
		-5.0	-5.6	96.0	32.1	95.9	32.8	95.2	33.2	92.1	31.9	89.1	30.6	83.0	28.1
		-3.0	-3.7	101	32.7	101	33.3	95.2	31.2	92.1	30.0	89.1	28.9	83.0	26.5
		0.0	-0.7	107	32.9	101	30.6	95.2	28.4	92.1	27.4	89.1	26.3	83.0	24.2
		3.0	2.2	107	30.0	101	27.9	95.2	26.0	92.1	25.0	89.1	24.1	83.0	22.2
		5.0	4.1	107	28.2	101	26.3	95.2	24.5	92.1	23.6	89.1	22.7	83.0	21.0
		7.0	6.0	107	26.6	101	24.8	95.2	23.1	92.1	22.3	89.1	21.5	83.0	19.9
		9.0	7.9	107	25.1	101	23.5	95.2	21.9	92.1	21.1	89.1	20.3	83.0	18.8
		11.0	9.8	107	23.7	101	22.2	95.2	20.7	92.1	20.0	89.1	19.3	83.0	17.8
		13.0	11.8	107	22.3	101	20.9	95.2	19.6	92.1	18.9	89.1	18.2	83.0	16.9
		15.0	13.7	107	21.1	101	19.8	95.2	18.5	92.1	17.9	89.1	17.3	83.0	16.0
70%	665 (74.90)	-19.8	-20.0	69.6	29.5	69.4	30.3	69.3	31.1	69.2	31.5	69.1	32.0	69.0	32.8
		-18.8	-19.0	70.8	29.8	70.7	30.6	70.5	31.4	70.5	31.8	70.4	32.2	70.3	33.0
		-16.7	-17.0	73.6	30.3	73.4	31.1	73.3	31.9	73.2	32.3	73.2	32.6	72.6	33.1
		-13.7	-15.0	76.7	30.9	76.5	31.6	76.4	32.4	76.3	32.7	76.2	33.1	72.6	31.4
		-11.8	-13.0	80.1	31.5	80.0	32.2	79.8	32.9	79.7	33.2	77.9	32.5	72.6	29.8
		-9.8	-11.0	83.9	32.1	83.7	32.7	83.3	33.2	80.6	31.9	77.9	30.7	72.6	28.2
		-9.5	-10.0	85.9	32.3	85.7	33.0	83.3	32.3	80.6	31.0	77.9	29.8	72.6	27.4
		-8.5	-9.1	87.7	32.6	87.6	33.2	83.3	31.4	80.6	30.2	77.9	29.0	72.6	26.7
		-7.0	-7.6	91.0	33.0	88.7	32.4	83.3	30.0	80.6	28.9	77.9	27.8	72.6	25.5
		-5.0	-5.6	94.0	32.7	88.7	30.4	83.3	28.3	80.6	27.2	77.9	26.1	72.6	24.1
		-3.0	-3.7	94.0	30.8	88.7	28.7	83.3	26.7	80.6	25.7	77.9	24.7	72.6	22.8
		0.0	-0.7	94.0	28.0	88.7	26.2	83.3	24.3	80.6	23.5	77.9	22.6	72.6	20.9
		3.0	2.2	94.0	25.6	88.7	23.9	83.3	22.3	80.6	21.5	77.9	20.7	72.6	19.2
		5.0	4.1	94.0	24.2	88.7	22.6	83.3	21.1	80.6	20.4	77.9	19.6	72.6	18.2
		7.0	6.0	94.0	22.8	88.7	21.4	83.3	20.0	80.6	19.3	77.9	18.6	72.6	17.2
		9.0	7.9	94.0	21.6	88.7	20.2	83.3	18.9	80.6	18.3	77.9	17.6	72.6	16.3
		11.0	9.8	94.0	20.4	88.7	19.2	83.3	17.9	80.6	17.3	77.9	16.7	72.6	15.5
		13.0	11.8	94.0	19.3	88.7	18.1	83.3	17.0	80.6	16.4	77.9	15.8	72.6	14.7
		15.0	13.7	94.0	18.3	88.7	17.2	83.3	16.1	80.6	15.6	77.9	15.1	72.6	14.0
60%	570 (64.20)	-19.8	-20.0	69.2	31.6	69.1	32.3	69.0	32.9	68.9	33.3	66.8	32.1	62.2	29.5
		-18.8	-19.0	70.5	31.8	70.3	32.5	70.2	33.2	69.1	32.7	66.8	31.4	62.2	28.8
		-16.7	-17.0	73.2	32.3	73.1	32.9	71.4	32.4	69.1	31.2	66.8	29.9	62.2	27.5
		-13.7	-15.0	76.3	32.7	76.0	33.2	71.4	30.8	69.1	29.6	66.8	28.5	62.2	26.2
		-11.8	-13.0	79.7	33.2	76.0	31.5	71.4	29.2	69.1	28.1	66.8	27.0	62.2	24.9
		-9.8	-11.0	80.6	31.9	76.0	29.7	71.4	27.6	69.1	26.6	66.8	25.6	62.2	23.6
		-9.5	-10.0	80.6	31.0	76.0	28.9	71.4	26.9	69.1	25.9	66.8	24.9	62.2	22.9
		-8.5	-9.1	80.6	30.2	76.0	28.1	71.4	26.2	69.1	25.2	66.8	24.2	62.2	22.4
		-7.0	-7.6	80.6	28.9	76.0	26.9	71.4	25.1	69.1	24.1	66.8	23.2	62.2	21.5
		-5.0	-5.6	80.6	27.2	76.0	25.4	71.4	23.6	69.1	22.8	66.8	21.9	62.2	20.3
		-3.0	-3.7	80.6	25.7	76.0	24.0	71.4	22.4	69.1	21.6	66.8	20.8	62.2	19.2
		0.0	-0.7	80.6	23.4	76.0	21.9	71.4	20.5	69.1	19.8	66.8	19.1	62.2	17.7
		3.0	2.2	80.6	21.5	76.0	20.2	71.4	18.8	69.1	18.2	66.8	17.6	62.2	16.3
		5.0	4.1	80.6	20.3	76.0	19.1	71.4	17.9	69.1	17.2	66.8	16.6	62.2	15.5
		7.0	6.0	80.6	19.3	76.0	18.1	71.4	16.9	69.1	16.4	66.8	15.8	62.2	14.7
		9.0	7.9	80.6	18.2	76.0	17.1	71.4	16.1	69.1	15.5	66.8	15.0	62.2	14.0
		11.0	9.8	80.6	17.3	76.0	16.3	71.4	15.3	69.1	14.8	66.8	14.3	62.2	13.3
		13.0	11.8	80.6	16.4	76.0	15.4	71.4	14.5	69.1	14.0	66.8	13.6	62.2	12.7
		15.0	13.7	80.6	15.6	76.0	14.7	71.4	13.8	69.1	13.4	66.8	12.9	62.2	12.1
50%	475 (53.50)	-19.8	-20.0	67.1	32.3	63.3	30.1	59.5	28.0	57.6	26.9	55.7	25.9	51.9	23.8
		-18.8	-19.0	67.1	31.6	63.3	29.4	59.5	27.4	57.6	26.3	55.7	25.3	51.9	23.3
		-16.7	-17.0	67.1	30.1	63.3	28.1	59.5	26.1	57.6	25.2	55.7	24.2	51.9	22.3
		-13.7	-15.0	67.1	28.6	63.3	26.7	59.5	24.9	57.6	24.0	55.7	23.1	51.9	21.3
		-11.8	-13.0	67.1	27.2	63.3	25.4	59.5	23.6	57.6	22.8	55.7	21.9	51.9	20.3
		-9.8	-11.0	67.1	25.7	63.3	24.0	59.5	22.4	57.6	21.6	55.7	20.8	51.9	19.3
		-9.5	-10.0	67.1	25.0	63.3	23.4	59.5	21.8	57.6	21.0	55.7	20.3	51.9	18.8
		-8.5	-9.1	67.1	24.4	63.3	22.8	59.5	21.3	57.6	20.5	55.7	19.8	51.9	18.3
		-7.0	-7.6	67.1	23.4	63.3	21.9	59.5	20.4	57.6	19.7	55.7	19.0	51.9	17.6
		-5.0	-5.6	67.1	22.1	63.3	20.7	59.5	19.3	57.6	18.6	55.7	18.0	51.9	16.7
		-3.0	-3.7	67.1	20.9	63.3	19.6	59.5	18.3	57.6	17.7	55.7	17.1	51.9	15.9
		0.0	-0.7	67.1	19.2	63.3	18.0	59.5	16.9	57.6	16.3	55.7	15.7	51.9	14.6
		3.0	2.2	67.1	17.6	63.3	16.6	59.5	15.6	57.6	15.1	55.7	14.6	51.9	13.6
		5.0	4.1	67.1	16.7	63.3	15.8	59.5	14.8	57.6	14.3	55.7	13.8	51.9	12.9
		7.0	6.0	67.1	15.9	63.3	15.0	59.5	14.1	57.6	13.6	55.7	13.2	51.9	12.3
		9.0	7.9	67.1	15.1	63.3	14.2	59.5	13.4	57.6	13.0	55.7	12.5	51.9	11.7
		11.0	9.8	67.1	14.4	63.3	13.5	59.5	12.7	57.6	12.4	55.7	12.0	51.9	11.2
		13.0	11.8	67.1	13.6	63.3	12.9	59.5	12.1	57.6	11.8	55.7	11.4	51.9	10.7
		15.0	13.7	67.1	13.0	63.3	12.3	59.5	11.6	57.6	11.2	55.7	10.9	51.9	10.2

4TW31482-2A

4 Capacity tables

4 - 3 Heating capacity tables

REYQ40P8

TC: Total Capacity: kW ; PI: Power Input: kW (compressor + outdoor fan motor)

Combination (%)	Capacity index (kW)	Outdoor air temp.		Indoor air temperature: °CDB											
				16.0		18.0		20.0		21.0		22.0		24.0	
				TC	PI	TC	PI	TC	PI	TC	PI	TC	PI	TC	PI
		°CDB	°CWB	kW	kW	kW	kW	kW	kW	kW	kW	kW	kW	kW	kW
130	1300 (145.60)	-19.8	-20.0	72.2	15.9	71.9	17.5	71.6	19.1	71.5	19.9	71.3	20.7	71.0	22.3
		-18.8	-19.0	73.4	16.4	73.2	18.0	72.9	19.5	72.7	20.3	72.6	21.1	72.3	22.7
		-16.7	-17.0	76.2	17.5	75.9	19.0	75.6	20.5	75.5	21.2	75.4	22.0	75.1	23.5
		-13.7	-15.0	79.3	18.6	79.0	20.0	78.7	21.5	78.6	22.2	78.5	22.9	78.2	24.4
		-11.8	-13.0	82.7	19.7	82.5	21.1	82.2	22.5	82.0	23.2	81.9	23.9	81.6	25.2
		-9.8	-11.0	86.5	20.8	86.2	22.2	85.9	23.5	85.8	24.1	85.6	24.8	85.4	26.1
		-9.5	-10.0	88.5	21.4	88.2	22.7	87.9	24.0	87.8	24.6	87.7	25.3	87.4	26.5
		-8.5	-9.1	90.4	21.9	90.1	23.2	89.8	24.4	89.7	25.0	89.5	25.7	89.2	26.9
		-7.0	-7.6	93.7	22.7	93.4	23.9	93.1	25.1	93.0	25.8	92.8	26.4	92.5	27.6
		-5.0	-5.6	98.3	23.8	98.0	24.9	97.8	26.1	97.6	26.7	97.5	27.2	97.2	28.4
		-3.0	-3.7	103	24.8	103	25.9	102	27.0	102	27.5	102	28.1	102	29.2
		0.0	-0.7	111	26.3	111	27.3	111	28.3	110	28.8	110	29.3	110	30.3
		3.0	2.2	120	27.6	119	28.5	119	29.5	119	29.9	119	30.4	119	31.3
		5.0	4.1	126	28.4	125	29.3	125	30.2	125	30.6	125	31.1	125	32.0
		7.0	6.0	132	29.2	132	30.0	131	30.9	131	31.3	131	31.7	131	32.6
		9.0	7.9	139	29.9	138	30.7	138	31.5	138	31.9	138	32.4	137	33.2
		11.0	9.8	145	30.6	145	31.4	145	32.2	145	32.6	145	32.9	142	32.7
		13.0	11.8	153	31.3	153	32.1	152	32.8	152	33.2	152	33.5	142	30.8
		15.0	13.7	160	32.0	160	32.6	160	33.3	157	32.9	152	31.6	142	29.0
120	1200 (134.40)	-19.8	-20.0	71.8	18.0	71.5	19.5	71.3	21.0	71.1	21.7	71.0	22.5	70.7	23.9
		-18.8	-19.0	73.1	18.5	72.8	20.0	72.5	21.4	72.4	22.1	72.3	22.9	72.0	24.3
		-16.7	-17.0	75.8	19.5	75.6	20.9	75.3	22.3	75.2	23.0	75.0	23.7	74.8	25.1
		-13.7	-15.0	78.9	20.5	78.7	21.9	78.4	23.2	78.3	23.9	78.1	24.5	77.9	25.9
		-11.8	-13.0	82.4	21.6	82.1	22.9	81.8	24.1	81.7	24.8	81.6	25.4	81.3	26.7
		-9.8	-11.0	86.1	22.6	85.9	23.8	85.6	25.1	85.5	25.7	85.3	26.3	85.1	27.5
		-9.5	-10.0	88.1	23.1	87.9	24.3	87.6	25.5	87.5	26.1	87.3	26.7	87.1	27.9
		-8.5	-9.1	90.0	23.6	89.7	24.8	89.5	25.9	89.3	26.5	89.2	27.1	88.9	28.2
		-7.0	-7.6	93.3	24.4	93.0	25.5	92.8	26.6	92.6	27.2	92.5	27.7	92.2	28.8
		-5.0	-5.6	97.9	25.3	97.7	26.4	97.4	27.5	97.3	28.0	97.2	28.5	96.9	29.6
		-3.0	-3.7	103	26.3	102	27.3	102	28.3	102	28.8	102	29.3	102	30.3
		0.0	-0.7	111	27.6	111	28.6	110	29.5	110	30.0	110	30.4	110	31.4
		3.0	2.2	119	28.9	119	29.7	119	30.6	119	31.0	119	31.5	118	32.3
		5.0	4.1	125	29.6	125	30.4	125	31.3	125	31.7	124	32.1	124	32.9
		7.0	6.0	132	30.3	131	31.1	131	31.9	131	32.3	131	32.7	131	33.5
		9.0	7.9	138	31.0	138	31.8	138	32.5	137	32.9	137	33.3	131	31.6
		11.0	9.8	145	31.7	145	32.4	144	33.1	144	33.4	140	32.4	131	29.8
		13.0	11.8	153	32.3	152	33.0	150	33.0	145	31.7	140	30.4	131	28.0
		15.0	13.7	160	32.9	160	33.5	150	31.1	145	29.9	140	28.7	131	26.5
110	1100 (123.20)	-19.8	-20.0	71.4	20.2	71.2	21.6	70.9	22.9	70.8	23.6	70.7	24.3	70.5	25.6
		-18.8	-19.0	72.7	20.6	72.4	22.0	72.2	23.3	72.1	24.0	71.9	24.6	71.7	26.0
		-16.7	-17.0	75.4	21.6	75.2	22.8	75.0	24.1	74.8	24.7	74.7	25.4	74.5	26.7
		-13.7	-15.0	78.5	22.5	78.3	23.7	78.1	24.9	77.9	25.6	77.8	26.2	77.6	27.4
		-11.8	-13.0	82.0	23.4	81.7	24.6	81.5	25.8	81.4	26.4	81.2	27.0	81.0	28.1
		-9.8	-11.0	85.7	24.4	85.5	25.5	85.2	26.6	85.1	27.2	85.0	27.7	84.8	28.9
		-9.5	-10.0	87.7	24.9	87.5	26.0	87.3	27.1	87.1	27.6	87.0	28.1	86.8	29.2
		-8.5	-9.1	89.6	25.3	89.4	26.4	89.1	27.4	89.0	28.0	88.9	28.5	88.6	29.6
		-7.0	-7.6	92.9	26.0	92.7	27.0	92.4	28.0	92.3	28.6	92.2	29.1	91.9	30.1
		-5.0	-5.6	97.6	26.9	97.3	27.9	97.1	28.9	97.0	29.3	96.8	29.8	96.6	30.8
		-3.0	-3.7	102	27.7	102	28.7	102	29.6	102	30.1	102	30.5	101	31.4
		0.0	-0.7	110	29.0	110	29.8	110	30.7	110	31.1	110	31.6	109	32.4
		3.0	2.2	119	30.1	119	30.9	118	31.7	118	32.1	118	32.5	118	33.3
		5.0	4.1	125	30.8	125	31.6	124	32.3	124	32.7	124	33.1	120	32.1
		7.0	6.0	131	31.5	131	32.2	131	32.9	131	33.3	129	32.9	120	30.2
		9.0	7.9	138	32.1	138	32.8	137	33.5	133	32.3	129	31.0	120	28.5
		11.0	9.8	145	32.7	144	33.4	138	31.6	133	30.4	129	29.2	120	26.9
		13.0	11.8	152	33.3	146	32.0	138	29.7	133	28.6	129	27.5	120	25.3
		15.0	13.7	155	32.4	146	30.2	138	28.0	133	27.0	129	26.0	120	24.0
100	1000 (112.00)	-19.8	-20.0	71.0	22.4	70.8	23.6	70.6	24.8	70.5	25.4	70.4	26.0	70.2	27.3
		-18.8	-19.0	72.3	22.8	72.1	24.0	71.8	25.2	71.7	25.8	71.6	26.4	71.4	27.6
		-16.7	-17.0	75.1	23.6	74.8	24.8	74.6	25.9	74.5	26.5	74.4	27.1	74.2	28.2
		-13.7	-15.0	78.1	24.4	77.9	25.6	77.7	26.7	77.6	27.2	77.5	27.8	77.3	28.9
		-11.8	-13.0	81.6	25.3	81.4	26.4	81.1	27.4	81.0	28.0	80.9	28.5	80.7	29.6
		-9.8	-11.0	85.3	26.2	85.1	27.2	84.9	28.2	84.8	28.7	84.7	29.2	84.5	30.2
		-9.5	-10.0	87.4	26.6	87.1	27.6	86.9	28.6	86.8	29.1	86.7	29.6	86.5	30.6
		-8.5	-9.1	89.2	27.0	89.0	28.0	88.8	28.9	88.7	29.4	88.6	29.9	88.3	30.9
		-7.0	-7.6	92.5	27.6	92.3	28.6	92.1	29.5	92.0	30.0	91.8	30.4	91.6	31.4
		-5.0	-5.6	97.2	28.5	96.9	29.3	96.7	30.2	96.6	30.7	96.5	31.1	96.3	32.0
		-3.0	-3.7	102	29.2	102	30.1	101	30.9	101	31.3	101	31.7	101	32.6
		0.0	-0.7	110	30.4	110	31.1	110	31.9	109	32.3	109	32.7	109	33.4
		3.0	2.2	119	31.4	118	32.1	118	32.8	118	33.2	117	33.2	109	30.4
		5.0	4.1	125	32.0	124	32.7	124	33.4	121	32.5	117	31.2	109	28.7
		7.0	6.0	131	32.6	131	33.3	125	31.8	121	30.6	117	29.4	109	27.1
		9.0	7.9	137	33.2	133	32.3	125	30.0	121	28.8	117	27.7	109	25.5
		11.0	9.8	141	32.6	133	30.4	125	28.2	121	27.2	117	26.2	109	24.1
		13.0	11.8	141	30.6	133	28.6	125	26.6	121	25.6	117	24.7	109	22.8
		15.0	13.7	141	28.9	133	27.0	125	25.1	121	24.2	117	23.3	109	21.6

4TW31482-2A

NOTES - ANMERKUNGEN - Σημειώσεις - NOTAS - REMARQUES - NOTE - OPMERKINGEN - примечания - NOTLAR

1 is shown as reference. When selecting the unit models, avoid the Outdoor air temperature range shown by .

dient als Verweis. Vermeiden Sie bei der Auswahl der Gerätemodelle den als markierten Temperaturbereich der Außenluft

Η είναι ενδεικτική. κατά την επιλογή των μοντέλων των μονάδων, αποφύγετε το εύρος θερμοκρασίας εξωτερικού αέρα που υποδεικνύεται

se muestra como referencia. Cuando seleccione los modelos de unidad, evite el intervalo de temperaturas del aire exterior indicado mediante

est montré comme référence.Lors du choix des modèles d'unités, évitez la plage de températures de l'air extérieur illustré par

valori riportati unicamente come riferimento. Nel selezionare i modelli delle unità, non considerare i valori di temperatura dell'aria esterna indicati con il colore

is als referentie getoond. Wanneer modellen van eenheden worden gekozen, vermijd dan het bereik van buitenluchttemperaturen geïllustreerd door

показан как. При выборе модели устройства избегайте внешнюю температуру воздуха, указанную в

referans olarak gösterilmektedir. Ünite modellerini seçerken, belirtilen Dış hava sıcaklığı aralığından kaçının

2 The above table shows the average value of conditions which may occur.

Die obige Tabelle zeigt den Durchschnittswert der Bedingungen, die auftreten können.

Στον παραπάνω πίνακα αναγράφεται η μέση τιμή για συνθήκες που μπορεί να προκύψουν.

La tabla de arriba muestra el valor medio de condiciones que pueden ocurrir.

Le tableau ci-dessus donne la valeur moyenne pour des conditions qui peuvent survenir.

La tabella in alto mostra il valore delle condizioni medie che si possono riscontrare.

De tabel hierboven geeft de gemiddelde waarde aan van situaties die kunnen voorvallen.

Таблица расположенная выше показывает среднее значение условий, которые могут наступить.

Yukarıdaki tablo meydana gelebilecek koşulların ortalama değerini göstermektedir.

4 Capacity tables

4 - 3 Heating capacity tables

REYQ40P8

TC: Total Capacity: kW ; PI: Power Input: kW (compressor + outdoor fan motor)

Combination (%)	Capacity index (kW)	Outdoor air temp.		Indoor air temperature: °CDB											
				16.0		18.0		20.0		21.0		22.0		24.0	
				TC	PI	TC	PI	TC	PI	TC	PI	TC	PI	TC	PI
		°CDB	°CWB	kW	kW	kW	kW	kW	kW	kW	kW	kW	kW	kW	kW
90%	900 (100.80)	-19.8	-20.0	70.6	24.5	70.4	25.6	70.3	26.7	70.2	27.3	70.1	27.8	69.9	28.9
		-18.8	-19.0	71.9	24.9	71.7	26.0	71.5	27.1	71.4	27.6	71.3	28.1	71.1	29.2
		-16.7	-17.0	74.7	25.6	74.5	26.7	74.3	27.7	74.2	28.2	74.1	28.8	73.9	29.8
		-13.7	-15.0	77.8	26.4	77.6	27.4	77.4	28.4	77.3	28.9	77.2	29.4	77.0	30.4
		-11.8	-13.0	81.2	27.2	81.0	28.1	80.8	29.1	80.7	29.6	80.6	30.1	80.4	31.0
		-9.8	-11.0	85.0	28.0	84.8	28.9	84.6	29.8	84.5	30.2	84.4	30.7	84.2	31.6
		-9.5	-10.0	87.0	28.4	86.8	29.2	86.6	30.1	86.5	30.6	86.4	31.0	86.2	31.9
		-8.5	-9.1	88.8	28.7	88.6	29.6	88.4	30.4	88.3	30.9	88.2	31.3	88.0	32.2
		-7.0	-7.6	92.1	29.3	91.9	30.1	91.7	31.0	91.6	31.4	91.5	31.8	91.3	32.6
		-5.0	-5.6	96.8	30.0	96.6	30.8	96.4	31.6	96.3	32.0	96.2	32.4	96.0	33.2
		-3.0	-3.7	102	30.7	101	31.5	101	32.2	101	32.6	101	33.0	98.0	32.3
		0.0	-0.7	110	31.7	109	32.4	109	33.1	109	33.4	105	32.0	98.0	29.4
		3.0	2.2	118	32.7	118	33.3	113	31.6	109	30.4	105	29.2	98.0	26.9
		5.0	4.1	124	33.2	120	32.1	113	29.8	109	28.7	105	27.6	98.0	25.4
		7.0	6.0	127	32.4	120	30.2	113	28.1	109	27.0	105	26.0	98.0	24.0
		9.0	7.9	127	30.5	120	28.5	113	26.5	109	25.5	105	24.6	98.0	22.7
		11.0	9.8	127	28.8	120	26.9	113	25.0	109	24.1	105	23.2	98.0	21.5
		13.0	11.8	127	27.1	120	25.3	113	23.6	109	22.8	105	21.9	98.0	20.3
		15.0	13.7	127	25.6	120	23.9	113	22.3	109	21.6	105	20.8	98.0	19.2
80%	800 (89.60)	-19.8	-20.0	70.3	26.7	70.1	27.7	69.9	28.6	69.8	29.1	69.7	29.6	69.6	30.6
		-18.8	-19.0	71.5	27.0	71.3	28.0	71.2	28.9	71.1	29.4	71.0	29.9	70.8	30.9
		-16.7	-17.0	74.3	27.7	74.1	28.6	73.9	29.5	73.8	30.0	73.8	30.4	73.6	31.4
		-13.7	-15.0	77.4	28.4	77.2	29.2	77.0	30.1	76.9	30.6	76.8	31.0	76.7	31.9
		-11.8	-13.0	80.8	29.0	80.6	29.9	80.5	30.7	80.4	31.2	80.3	31.6	80.1	32.5
		-9.8	-11.0	84.6	29.7	84.4	30.6	84.2	31.4	84.1	31.8	84.0	32.2	83.9	33.0
		-9.5	-10.0	86.6	30.1	86.4	30.9	86.2	31.7	86.1	32.1	86.1	32.5	85.9	33.3
		-8.5	-9.1	88.5	30.4	88.3	31.2	88.1	32.0	88.0	32.3	87.9	32.7	87.1	33.1
		-7.0	-7.6	91.7	30.9	91.6	31.7	91.4	32.4	91.3	32.8	91.2	33.1	87.1	31.7
		-5.0	-5.6	96.4	31.6	96.2	32.3	96.0	33.0	96.0	33.3	93.6	32.5	87.1	29.8
		-3.0	-3.7	101	32.2	101	32.9	100	33.1	96.8	31.9	93.6	30.6	87.1	28.1
		0.0	-0.7	109	33.1	106	32.5	100	30.1	96.8	29.0	93.6	27.9	87.1	25.7
		3.0	2.2	113	31.8	106	29.6	100	27.5	96.8	26.5	93.6	25.5	87.1	23.5
		5.0	4.1	113	29.9	106	27.9	100	26.0	96.8	25.0	93.6	24.1	87.1	22.3
		7.0	6.0	113	28.2	106	26.3	100	24.5	96.8	23.7	93.6	22.8	87.1	21.1
		9.0	7.9	113	26.6	106	24.9	100	23.2	96.8	22.4	93.6	21.5	87.1	19.9
		11.0	9.8	113	25.1	106	23.5	100	21.9	96.8	21.2	93.6	20.4	87.1	18.9
		13.0	11.8	113	23.7	106	22.2	100	20.7	96.8	20.0	93.6	19.3	87.1	17.9
		15.0	13.7	113	22.4	106	21.0	100	19.7	96.8	19.0	93.6	18.3	87.1	17.0
70%	700 (78.40)	-19.8	-20.0	69.9	28.8	69.7	29.7	69.6	30.6	69.5	31.0	69.4	31.4	69.3	32.3
		-18.8	-19.0	71.1	29.1	71.0	30.0	70.8	30.8	70.7	31.2	70.7	31.7	70.5	32.5
		-16.7	-17.0	73.9	29.7	73.7	30.5	73.6	31.3	73.5	31.7	73.4	32.1	73.3	33.0
		-13.7	-15.0	77.0	30.3	76.8	31.1	76.7	31.9	76.6	32.3	76.5	32.6	76.3	33.3
		-11.8	-13.0	80.4	30.9	80.3	31.7	80.1	32.4	80.0	32.8	80.0	33.1	76.3	31.6
		-9.8	-11.0	84.2	31.5	84.0	32.2	83.9	32.9	83.8	33.3	81.9	32.5	76.3	29.9
		-9.5	-10.0	86.2	31.8	86.0	32.5	85.9	33.2	84.7	32.9	81.9	31.6	76.3	29.0
		-8.5	-9.1	88.1	32.1	87.9	32.8	87.5	33.3	84.7	32.0	81.9	30.8	76.3	28.3
		-7.0	-7.6	91.3	32.5	91.2	33.2	87.5	31.8	84.7	30.6	81.9	29.4	76.3	27.1
		-5.0	-5.6	96.0	33.1	93.1	32.3	87.5	30.0	84.7	28.8	81.9	27.7	76.3	25.5
		-3.0	-3.7	98.7	32.6	93.1	30.4	87.5	28.3	84.7	27.2	81.9	26.2	76.3	24.2
		0.0	-0.7	98.7	29.7	93.1	27.7	87.5	25.8	84.7	24.9	81.9	23.9	76.3	22.1
		3.0	2.2	98.7	27.1	93.1	25.4	87.5	23.7	84.7	22.8	81.9	22.0	76.3	20.3
		5.0	4.1	98.7	25.6	93.1	24.0	87.5	22.4	84.7	21.6	81.9	20.8	76.3	19.3
		7.0	6.0	98.7	24.2	93.1	22.7	87.5	21.2	84.7	20.4	81.9	19.7	76.3	18.3
		9.0	7.9	98.7	22.9	93.1	21.4	87.5	20.0	84.7	19.3	81.9	18.7	76.3	17.3
		11.0	9.8	98.7	21.6	93.1	20.3	87.5	19.0	84.7	18.3	81.9	17.7	76.3	16.5
		13.0	11.8	98.7	20.4	93.1	19.2	87.5	18.0	84.7	17.4	81.9	16.8	76.3	15.6
		15.0	13.7	98.7	19.4	93.1	18.2	87.5	17.1	84.7	16.5	81.9	16.0	76.3	14.9
60%	600 (67.20)	-19.8	-20.0	69.5	31.0	69.4	31.7	69.2	32.5	69.2	32.8	69.1	33.2	65.4	31.2
		-18.8	-19.0	70.7	31.2	70.6	32.0	70.5	32.7	70.4	33.0	70.2	33.3	65.4	30.6
		-16.7	-17.0	73.5	31.7	73.4	32.4	73.2	33.1	72.6	33.1	70.2	31.7	65.4	29.2
		-13.7	-15.0	76.6	32.3	76.5	32.9	75.0	32.7	72.6	31.4	70.2	30.2	65.4	27.8
		-11.8	-13.0	80.0	32.8	79.8	33.4	75.0	31.0	72.6	29.8	70.2	28.6	65.4	26.4
		-9.8	-11.0	83.8	33.3	79.8	31.5	75.0	29.3	72.6	28.2	70.2	27.1	65.4	25.0
		-9.5	-10.0	84.6	32.9	79.8	30.6	75.0	28.5	72.6	27.4	70.2	26.4	65.4	24.3
		-8.5	-9.1	84.6	32.0	79.8	29.8	75.0	27.7	72.6	26.7	70.2	25.7	65.4	23.7
		-7.0	-7.6	84.6	30.6	79.8	28.6	75.0	26.6	72.6	25.6	70.2	24.6	65.4	22.7
		-5.0	-5.6	84.6	28.8	79.8	26.9	75.0	25.1	72.6	24.2	70.2	23.3	65.4	21.5
		-3.0	-3.7	84.6	27.2	79.8	25.4	75.0	23.7	72.6	22.9	70.2	22.0	65.4	20.4
		0.0	-0.7	84.6	24.9	79.8	23.3	75.0	21.7	72.6	21.0	70.2	20.2	65.4	18.7
		3.0	2.2	84.6	22.8	79.8	21.4	75.0	20.0	72.6	19.3	70.2	18.6	65.4	17.3
		5.0	4.1	84.6	21.6	79.8	20.2	75.0	18.9	72.6	18.3	70.2	17.6	65.4	16.4
		7.0	6.0	84.6	20.4	79.8	19.2	75.0	17.9	72.6	17.3	70.2	16.8	65.4	15.6
		9.0	7.9	84.6	19.3	79.8	18.2	75.0	17.0	72.6	16.5	70.2	15.9	65.4	14.8
		11.0	9.8	84.6	18.3	79.8	17.2	75.0	16.2	72.6	15.7	70.2	15.1	65.4	14.1
		13.0	11.8	84.6	17.4	79.8	16.3	75.0	15.4	72.6	14.9	70.2	14.4	65.4	13.4
		15.0	13.7	84.6	16.5	79.8	15.6	75.0	14.6	72.6	14.2	70.2	13.7	65.4	12.8
50%	500 (56.00)	-19.8	-20.0	69.1	33.2	66.5	31.9	62.5	29.6	60.5	28.5	58.5	27.4	54.5	25.3
		-18.8	-19.0	70.4	33.4	66.5	31.2	62.5	29.0	60.5	27.9	58.5	26.8	54.5	24.7
		-16.7	-17.0	70.5	31.9	66.5	29.8	62.5	27.7	60.5	26.7	58.5	25.7	54.5	23.7
		-13.7	-15.0	70.5	30.4	66.5	28.3	62.5	26.4	60.5	25.4	58.5	24.5	54.5	22.6
		-11.8	-13.0	70.5	28.8	66.5	26.9	62.5	25.1	60.5	24.1	58.5	23.2	54.5	21.5
		-9.8	-11.0	70.5	27.3	66.5	25.5	62.5	23.8	60.5	22.9	58.5	22.1	54.5	20.4
		-9.5	-10.0	70.5	26.5	66.5	24.8	62.5	23.1	60.5	22.3	58.5	21.5	54.5	19.9
		-8.5	-9.1	70.5	25.9	66.5	24.2	62.5	22.6	60.5	21.8	58.5	21.0	54.5	19.4
		-7.0	-7.6	70.5	24.8	66.5	23.2	62.5	21.6	60.5	20.9	58.5	20.1	54.5	18.7
		-5.0	-5.6	70.5	23.4	66.5	21.9	62.5	20.5	60.5	19.8	58.5	19.1	54.5	17.7
		-3.0	-3.7	70.5	22.1	66.5	20.8	62.5	19.4	60.5	18.8	58.5	18.1	54.5	16.8
		0.0	-0.7	70.5	20.3	66.5	19.1	62.5	17.9	60.5	17.3	58.5	16.7	54.5	15.5
		3.0	2.2	70.5	18.7	66.5	17.6	62.5	16.5	60.5	16.0	58.5	15.4	54.5	14.4
		5.0	4.1	70.5	17.7	66.5	16.7	62.5	15.7	60.5	15.2	58.5	14.7	54.5	13.7
		7.0	6.0	70.5	16.8	66.5	15.9	62.5	14.9	60.5	14.4	58.5	14.0	54.5	13.0
		9.0	7.9	70.5	16.0	66.5	15.1	62.5	14.2	60.5	13.7	58.5	13.3	54.5	12.4
		11.0	9.8	70.5	15.2	66.5	14.4	62.5	13.5	60.5	13.1	58.5	12.7	54.5	11.9
		13.0	11.8	70.5	14.4	66.5	13.6	62.5	12.9	60.5	12.5	58.5	12.1	54.5	11.3
		15.0	13.7	70.5	13.8	66.5	13.0	62.5	12.3	60.5	11.9	58.5	11.5	54.5	10.8

4TW31482-2A

4 Capacity tables

4 - 3 Heating capacity tables

REYQ42P8

TC: Total Capacity: kW ; PI: Power Input: kW (compressor + outdoor fan motor)

Combination (%)	Capacity index (kW)	Outdoor air temp.		Indoor air temperature: °CDB											
				16.0		18.0		20.0		21.0		22.0		24.0	
				TC	PI	TC	PI	TC	PI	TC	PI	TC	PI	TC	PI
		°CDB	°CWB	kW	kW	kW	kW	kW	kW	kW	kW	kW	kW	kW	kW
130	1365 (153.40)	-19.8	-20.0	81.7	20.9	81.4	22.6	81.1	24.2	81.0	25.1	80.8	25.9	80.5	27.6
		-18.8	-19.0	83.2	21.4	82.9	23.1	82.6	24.7	82.4	25.6	82.3	26.4	82.0	28.0
		-16.7	-17.0	86.4	22.6	86.1	24.2	85.8	25.7	85.6	26.5	85.4	27.3	85.1	28.9
		-13.7	-15.0	89.9	23.7	89.6	25.3	89.3	26.8	89.2	27.5	89.0	28.3	88.7	29.8
		-11.8	-13.0	93.8	24.9	93.5	26.4	93.2	27.8	93.1	28.6	92.9	29.3	92.6	30.7
		-9.8	-11.0	98.1	26.1	97.8	27.5	97.5	28.9	97.4	29.6	97.2	30.3	96.9	31.7
		-9.5	-10.0	100	26.7	100	28.1	99.8	29.4	99.6	30.1	99.5	30.8	99.2	32.1
		-8.5	-9.1	103	27.2	102	28.6	102	29.9	102	30.5	102	31.2	101	32.5
		-7.0	-7.6	106	28.1	106	29.4	106	30.6	105	31.3	105	31.9	105	33.2
		-5.0	-5.6	112	29.2	111	30.4	111	31.6	111	32.2	111	32.8	110	34.1
		-3.0	-3.7	117	30.2	117	31.4	116	32.5	116	33.1	116	33.7	116	34.8
		0.0	-0.7	126	31.8	126	32.8	125	33.9	125	34.4	125	35.0	125	36.0
		3.0	2.2	136	33.2	135	34.2	135	35.2	135	35.6	135	36.1	134	37.1
		5.0	4.1	142	34.0	142	35.0	142	35.9	142	36.4	141	36.9	141	37.8
		7.0	6.0	149	34.8	149	35.7	149	36.6	149	37.1	149	37.5	148	38.4
		9.0	7.9	157	35.6	157	36.5	156	37.3	156	37.7	156	38.2	150	36.7
		11.0	9.8	165	36.4	164	37.2	164	38.0	164	38.4	161	37.7	150	34.5
		13.0	11.8	173	37.1	173	37.9	172	38.3	166	36.8	161	35.4	150	32.5
		15.0	13.7	181	37.7	181	38.5	172	36.1	166	34.7	161	33.3	150	30.7
120	1260 (141.60)	-19.8	-20.0	81.3	23.1	81.0	24.7	80.8	26.3	80.6	27.0	80.5	27.8	80.2	29.4
		-18.8	-19.0	82.8	23.7	82.5	25.2	82.2	26.7	82.1	27.5	81.9	28.2	81.7	29.7
		-16.7	-17.0	85.9	24.7	85.7	26.2	85.4	27.6	85.3	28.4	85.1	29.1	84.8	30.6
		-13.7	-15.0	89.5	25.8	89.2	27.2	88.9	28.6	88.8	29.3	88.7	30.0	88.4	31.4
		-11.8	-13.0	93.4	26.9	93.1	28.2	92.9	29.6	92.7	30.2	92.6	30.9	92.3	32.3
		-9.8	-11.0	97.7	28.0	97.4	29.3	97.1	30.5	97.0	31.2	96.9	31.8	96.6	33.1
		-9.5	-10.0	100.0	28.5	99.7	29.8	99.4	31.0	99.3	31.7	99.1	32.3	98.9	33.5
		-8.5	-9.1	102	29.0	102	30.2	102	31.5	101	32.1	101	32.7	101	33.9
		-7.0	-7.6	106	29.8	106	31.0	105	32.2	105	32.8	105	33.3	105	34.5
		-5.0	-5.6	111	30.8	111	32.0	111	33.1	110	33.6	110	34.2	110	35.3
		-3.0	-3.7	116	31.8	116	32.9	116	33.9	116	34.5	116	35.0	115	36.1
		0.0	-0.7	126	33.2	125	34.2	125	35.2	125	35.7	125	36.2	124	37.2
		3.0	2.2	135	34.5	135	35.4	135	36.3	135	36.8	134	37.2	134	38.2
		5.0	4.1	142	35.3	142	36.2	141	37.0	141	37.5	141	37.9	138	37.6
		7.0	6.0	149	36.1	149	36.9	148	37.7	148	38.1	148	38.5	138	35.4
		9.0	7.9	156	36.8	156	37.6	156	38.3	153	37.8	148	36.3	138	33.3
		11.0	9.8	164	37.4	164	38.2	158	37.0	153	35.6	148	34.2	138	31.4
		13.0	11.8	173	38.1	169	37.5	158	34.8	153	33.4	148	32.1	138	29.6
		15.0	13.7	179	38.0	169	35.4	158	32.8	153	31.6	148	30.3	138	27.9
110	1155 (129.80)	-19.8	-20.0	80.9	25.4	80.6	26.8	80.4	28.3	80.3	29.0	80.1	29.7	79.9	31.1
		-18.8	-19.0	82.4	25.9	82.1	27.3	81.8	28.7	81.7	29.4	81.6	30.1	81.3	31.5
		-16.7	-17.0	85.5	26.9	85.3	28.2	85.0	29.5	84.9	30.2	84.8	30.9	84.5	32.2
		-13.7	-15.0	89.1	27.9	88.8	29.1	88.6	30.4	88.5	31.1	88.3	31.7	88.1	33.0
		-11.8	-13.0	93.0	28.9	92.8	30.1	92.5	31.3	92.4	31.9	92.2	32.5	92.0	33.8
		-9.8	-11.0	97.3	29.9	97.0	31.0	96.8	32.2	96.7	32.8	96.5	33.4	96.3	34.5
		-9.5	-10.0	99.6	30.4	99.3	31.5	99.1	32.6	98.9	33.2	98.8	33.8	98.6	34.9
		-8.5	-9.1	102	30.8	101	31.9	101	33.0	101	33.6	101	34.2	101	35.3
		-7.0	-7.6	105	31.5	105	32.6	105	33.7	105	34.2	105	34.8	104	35.8
		-5.0	-5.6	111	32.5	110	33.5	110	34.5	110	35.0	110	35.6	110	36.6
		-3.0	-3.7	116	33.4	116	34.3	116	35.3	115	35.8	115	36.3	115	37.3
		0.0	-0.7	125	34.7	125	35.6	125	36.5	125	36.9	124	37.4	124	38.3
		3.0	2.2	135	35.8	135	36.7	134	37.5	134	37.9	134	38.4	127	35.9
		5.0	4.1	142	36.6	141	37.4	141	38.2	141	38.4	136	36.8	127	33.8
		7.0	6.0	149	37.3	148	38.0	145	37.6	141	36.1	136	34.7	127	31.9
		9.0	7.9	156	37.9	155	38.2	145	35.4	141	34.0	136	32.7	127	30.0
		11.0	9.8	164	38.5	155	35.9	145	33.3	141	32.1	136	30.8	127	28.4
		13.0	11.8	164	36.2	155	33.8	145	31.4	141	30.2	136	29.0	127	26.7
		15.0	13.7	164	34.2	155	31.9	145	29.6	141	28.5	136	27.4	127	25.3
100	1050 (118.00)	-19.8	-20.0	80.5	27.7	80.3	29.0	80.0	30.3	79.9	30.9	79.8	31.6	79.6	32.9
		-18.8	-19.0	82.0	28.1	81.7	29.4	81.5	30.7	81.4	31.3	81.3	31.9	81.0	33.2
		-16.7	-17.0	85.1	29.0	84.9	30.2	84.7	31.4	84.6	32.0	84.4	32.7	84.2	33.9
		-13.7	-15.0	88.7	29.9	88.4	31.1	88.2	32.2	88.1	32.8	88.0	33.4	87.8	34.6
		-11.8	-13.0	92.6	30.8	92.4	31.9	92.1	33.1	92.0	33.6	91.9	34.2	91.7	35.3
		-9.8	-11.0	96.9	31.7	96.7	32.8	96.4	33.9	96.3	34.4	96.2	34.9	96.0	36.0
		-9.5	-10.0	99.2	32.2	98.9	33.2	98.7	34.3	98.6	34.8	98.5	35.3	98.2	36.3
		-8.5	-9.1	101	32.6	101	33.6	101	34.6	101	35.1	101	35.6	100	36.7
		-7.0	-7.6	105	33.3	105	34.2	105	35.2	104	35.7	104	36.2	104	37.2
		-5.0	-5.6	110	34.1	110	35.0	110	36.0	110	36.4	110	36.9	109	37.8
		-3.0	-3.7	116	34.9	115	35.8	115	36.7	115	37.1	115	37.6	115	38.5
		0.0	-0.7	125	36.1	125	36.9	124	37.7	124	38.2	124	38.3	115	35.1
		3.0	2.2	134	37.2	134	37.9	132	37.8	128	36.3	124	34.9	115	32.0
		5.0	4.1	141	37.8	140	38.4	132	35.6	128	34.2	124	32.8	115	30.2
		7.0	6.0	148	38.5	140	36.1	132	33.5	128	32.2	124	31.0	115	28.5
		9.0	7.9	149	36.5	140	34.0	132	31.6	128	30.4	124	29.2	115	26.9
		11.0	9.8	149	34.4	140	32.1	132	29.8	128	28.7	124	27.6	115	25.5
		13.0	11.8	149	32.3	140	30.2	132	28.1	128	27.0	124	26.0	115	24.0
		15.0	13.7	149	30.5	140	28.5	132	26.5	128	25.6	124	24.6	115	22.8

4TW31482-2A

NOTES - ANMERKUNGEN - Σημειώσεις - NOTAS - REMARQUES - NOTE - OPMERKINGEN - примечания - NOTLAR

1 is shown as reference. When selecting the unit models, avoid the Outdoor air temperature range shown by .

dient als Verweis. Vermeiden Sie bei der Auswahl der Gerätemodelle den als markierten Temperaturbereich der Außenluft

Η είναι ενδεικτική. κατά την επιλογή των μοντέλων των μονάδων, αποφύγετε το εύρος θερμοκρασίας εξωτερικού αέρα που υποδεικνύεται

se muestra como referencia. Cuando seleccione los modelos de unidad, evite el intervalo de temperaturas del aire exterior indicado mediante

est montré comme référence.Lors du choix des modèles d'unités, évitez la plage de températures de l'air extérieur illustré par

valori riportati unicamente come riferimento. Nel selezionare i modelli delle unità, non considerare i valori di temperatura dell'aria esterna indicati con il colore

is als referentie getoond. Wanneer modellen van eenheden worden gekozen, vermijd dan het bereik van buitenluchttemperaturen geïllustreerd door

показан как. При выборе модели устройства избегайте внешнюю температуру воздуха, указанную в

referans olarak gösterilmektedir. Ünite modellerini seçerken, belirtilen Dış hava sıcaklığı aralığından kaçının

2 The above table shows the average value of conditions which may occur.

Die obige Tabelle zeigt den Durchschnittswert der Bedingungen, die auftreten können.

Στον παραπάνω πίνακα αναγράφεται η μέση τιμή για συνθήκες που μπορεί να προκύψουν.

La tabla de arriba muestra el valor medio de condiciones que pueden ocurrir.

Le tableau ci-dessus donne la valeur moyenne pour des conditions qui peuvent survenir.

La tabella in alto mostra il valore delle condizioni medie che si possono riscontrare.

De tabel hierboven geeft de gemiddelde waarde aan van situaties die kunnen voorvallen.

Таблица расположенная выше показывает среднее значение условий, которые могут наступить.

Yukarıdaki tablo meydana gelebilecek koşulların ortalama değerini göstermektedir.

4 Capacity tables

4 - 3 Heating capacity tables

REYQ42P8

TC: Total Capacity: kW ; PI: Power Input: kW (compressor + outdoor fan motor)

Combination (%)	Capacity index (kW)	Outdoor air temp.		Indoor air temperature: °CDB											
				16.0		18.0		20.0		21.0		22.0		24.0	
				TC	PI	TC	PI	TC	PI	TC	PI	TC	PI	TC	PI
		°CDB	°CWB	kW	kW	kW	kW	kW	kW	kW	kW	kW	kW	kW	kW
90%	945 (106.20)	-19.8	-20.0	80.1	30.0	79.9	31.1	79.7	32.3	79.6	32.9	79.5	33.4	79.3	34.6
		-18.8	-19.0	81.5	30.3	81.3	31.5	81.1	32.6	81.0	33.2	80.9	33.8	80.7	34.9
		-16.7	-17.0	84.7	31.1	84.5	32.2	84.3	33.3	84.2	33.9	84.1	34.4	83.9	35.5
		-13.7	-15.0	88.3	32.0	88.1	33.0	87.9	34.1	87.8	34.6	87.6	35.1	87.4	36.2
		-11.8	-13.0	92.2	32.8	92.0	33.8	91.8	34.8	91.7	35.3	91.6	35.8	91.4	36.8
		-9.8	-11.0	96.5	33.6	96.3	34.6	96.1	35.5	96.0	36.0	95.9	36.5	95.6	37.4
		-9.5	-10.0	98.8	34.0	98.6	34.9	98.3	35.9	98.2	36.3	98.1	36.8	97.9	37.8
		-8.5	-9.1	101	34.4	101	35.3	100	36.2	100	36.7	100	37.1	100	38.0
		-7.0	-7.6	105	35.0	104	35.9	104	36.7	104	37.2	104	37.6	104	38.4
		-5.0	-5.6	110	35.8	110	36.6	109	37.4	109	37.8	109	38.3	104	36.1
		-3.0	-3.7	115	36.5	115	37.3	115	38.1	115	38.5	111	37.0	104	34.0
		0.0	-0.7	124	37.5	124	38.3	119	36.5	115	35.1	111	33.7	104	31.0
		3.0	2.2	134	38.5	126	35.9	119	33.3	115	32.0	111	30.8	104	28.3
		5.0	4.1	134	36.3	126	33.8	119	31.4	115	30.2	111	29.0	104	26.7
		7.0	6.0	134	34.1	126	31.8	119	29.6	115	28.5	111	27.4	104	25.3
		9.0	7.9	134	32.2	126	30.0	119	27.9	115	26.9	111	25.9	104	23.9
		11.0	9.8	134	30.3	126	28.3	119	26.4	115	25.4	111	24.5	104	22.6
		13.0	11.8	134	28.6	126	26.7	119	24.9	115	24.0	111	23.1	104	21.4
		15.0	13.7	134	27.0	126	25.3	119	23.6	115	22.8	111	21.9	104	20.3
80%	840 (94.40)	-19.8	-20.0	79.7	32.2	79.5	33.3	79.3	34.3	79.2	34.8	79.1	35.3	78.9	36.4
		-18.8	-19.0	81.1	32.6	80.9	33.6	80.8	34.6	80.7	35.1	80.6	35.6	80.4	36.6
		-16.7	-17.0	84.3	33.3	84.1	34.3	83.9	35.2	83.9	35.7	83.8	36.2	83.6	37.2
		-13.7	-15.0	87.9	34.0	87.7	34.9	87.5	35.9	87.4	36.3	87.3	36.8	87.1	37.7
		-11.8	-13.0	91.8	34.7	91.6	35.6	91.4	36.5	91.3	37.0	91.2	37.4	91.0	38.3
		-9.8	-11.0	96.1	35.5	95.9	36.3	95.7	37.2	95.6	37.6	95.5	38.0	92.0	36.8
		-9.5	-10.0	98.4	35.8	98.2	36.7	98.0	37.5	97.9	37.9	97.8	38.3	92.0	35.7
		-8.5	-9.1	100	36.2	100	37.0	100	37.8	100	38.2	98.8	37.9	92.0	34.8
		-7.0	-7.6	104	36.7	104	37.5	104	38.3	102	37.8	98.8	36.2	92.0	33.3
		-5.0	-5.6	109	37.4	109	38.1	106	36.9	102	35.5	98.8	34.1	92.0	31.3
		-3.0	-3.7	115	38.0	112	37.5	106	34.8	102	33.5	98.8	32.1	92.0	29.6
		0.0	-0.7	119	36.6	112	34.1	106	31.7	102	30.5	98.8	29.3	92.0	27.0
		3.0	2.2	119	33.4	112	31.2	106	29.0	102	27.9	98.8	26.9	92.0	24.8
		5.0	4.1	119	31.5	112	29.4	106	27.4	102	26.4	98.8	25.4	92.0	23.4
		7.0	6.0	119	29.7	112	27.7	106	25.8	102	24.9	98.8	24.0	92.0	22.2
		9.0	7.9	119	28.0	112	26.2	106	24.4	102	23.6	98.8	22.7	92.0	21.0
		11.0	9.8	119	26.5	112	24.8	106	23.1	102	22.3	98.8	21.5	92.0	19.9
		13.0	11.8	119	25.0	112	23.4	106	21.9	102	21.1	98.8	20.4	92.0	18.9
		15.0	13.7	119	23.7	112	22.2	106	20.8	102	20.0	98.8	19.3	92.0	18.0
70%	735 (82.60)	-19.8	-20.0	79.3	34.5	79.1	35.4	78.9	36.3	78.9	36.8	78.8	37.2	78.6	38.1
		-18.8	-19.0	80.7	34.8	80.6	35.7	80.4	36.6	80.3	37.0	80.2	37.5	80.1	38.3
		-16.7	-17.0	83.9	35.4	83.7	36.3	83.6	37.1	83.5	37.6	83.4	38.0	80.5	36.8
		-13.7	-15.0	87.5	36.1	87.3	36.9	87.1	37.7	87.1	38.1	86.5	38.2	80.5	35.0
		-11.8	-13.0	91.4	36.7	91.2	37.5	91.1	38.3	89.4	37.6	86.5	36.1	80.5	33.1
		-9.8	-11.0	95.7	37.3	95.5	38.1	92.4	37.0	89.4	35.5	86.5	34.1	80.5	31.3
		-9.5	-10.0	97.9	37.7	97.8	38.4	92.4	35.9	89.4	34.5	86.5	33.1	80.5	30.5
		-8.5	-9.1	100	37.9	98.3	37.7	92.4	35.0	89.4	33.6	86.5	32.3	80.5	29.7
		-7.0	-7.6	104	38.4	98.3	36.0	92.4	33.4	89.4	32.1	86.5	30.9	80.5	28.4
		-5.0	-5.6	104	36.4	98.3	33.9	92.4	31.5	89.4	30.3	86.5	29.1	80.5	26.8
		-3.0	-3.7	104	34.3	98.3	32.0	92.4	29.7	89.4	28.6	86.5	27.5	80.5	25.4
		0.0	-0.7	104	31.2	98.3	29.2	92.4	27.1	89.4	26.1	86.5	25.2	80.5	23.3
		3.0	2.2	104	28.6	98.3	26.7	92.4	24.9	89.4	24.0	86.5	23.1	80.5	21.4
		5.0	4.1	104	27.0	98.3	25.2	92.4	23.5	89.4	22.7	86.5	21.9	80.5	20.3
		7.0	6.0	104	25.5	98.3	23.9	92.4	22.3	89.4	21.5	86.5	20.7	80.5	19.2
		9.0	7.9	104	24.1	98.3	22.6	92.4	21.1	89.4	20.4	86.5	19.7	80.5	18.3
		11.0	9.8	104	22.8	98.3	21.4	92.4	20.0	89.4	19.4	86.5	18.7	80.5	17.4
		13.0	11.8	104	21.6	98.3	20.3	92.4	19.0	89.4	18.3	86.5	17.7	80.5	16.5
		15.0	13.7	104	20.5	98.3	19.2	92.4	18.0	89.4	17.4	86.5	16.8	80.5	15.7
60%	630 (70.80)	-19.8	-20.0	78.9	36.8	78.7	37.5	78.6	38.3	76.7	37.3	74.1	35.8	69.0	32.8
		-18.8	-19.0	80.3	37.0	80.2	37.8	79.2	37.9	76.7	36.4	74.1	35.0	69.0	32.1
		-16.7	-17.0	83.5	37.6	83.4	38.3	79.2	36.1	76.7	34.7	74.1	33.3	69.0	30.6
		-13.7	-15.0	87.1	38.1	84.3	37.0	79.2	34.3	76.7	33.0	74.1	31.7	69.0	29.2
		-11.8	-13.0	89.4	37.6	84.3	35.0	79.2	32.5	76.7	31.3	74.1	30.1	69.0	27.7
		-9.8	-11.0	89.4	35.5	84.3	33.1	79.2	30.7	76.7	29.6	74.1	28.5	69.0	26.2
		-9.5	-10.0	89.4	34.5	84.3	32.2	79.2	29.9	76.7	28.8	74.1	27.7	69.0	25.5
		-8.5	-9.1	89.4	33.6	84.3	31.3	79.2	29.1	76.7	28.0	74.1	27.0	69.0	24.9
		-7.0	-7.6	89.4	32.1	84.3	30.0	79.2	27.9	76.7	26.9	74.1	25.9	69.0	23.9
		-5.0	-5.6	89.4	30.3	84.3	28.3	79.2	26.3	76.7	25.4	74.1	24.4	69.0	22.6
		-3.0	-3.7	89.4	28.6	84.3	26.7	79.2	24.9	76.7	24.0	74.1	23.1	69.0	21.4
		0.0	-0.7	89.4	26.1	84.3	24.5	79.2	22.8	76.7	22.0	74.1	21.2	69.0	19.7
		3.0	2.2	89.4	24.0	84.3	22.5	79.2	21.0	76.7	20.3	74.1	19.6	69.0	18.2
		5.0	4.1	89.4	22.7	84.3	21.3	79.2	19.9	76.7	19.2	74.1	18.6	69.0	17.3
		7.0	6.0	89.4	21.5	84.3	20.2	79.2	18.9	76.7	18.3	74.1	17.6	69.0	16.4
		9.0	7.9	89.4	20.4	84.3	19.2	79.2	18.0	76.7	17.4	74.1	16.8	69.0	15.6
		11.0	9.8	89.4	19.3	84.3	18.2	79.2	17.1	76.7	16.5	74.1	16.0	69.0	14.9
		13.0	11.8	89.4	18.3	84.3	17.2	79.2	16.2	76.7	15.7	74.1	15.2	69.0	14.2
		15.0	13.7	89.4	17.4	84.3	16.4	79.2	15.4	76.7	14.9	74.1	14.5	69.0	13.5
50%	525 (59.00)	-19.8	-20.0	74.5	36.0	70.2	33.5	66.0	31.1	63.9	30.0	61.8	28.8	57.5	26.6
		-18.8	-19.0	74.5	35.2	70.2	32.8	66.0	30.5	63.9	29.3	61.8	28.2	57.5	26.0
		-16.7	-17.0	74.5	33.5	70.2	31.3	66.0	29.1	63.9	28.0	61.8	26.9	57.5	24.9
		-13.7	-15.0	74.5	31.9	70.2	29.8	66.0	27.7	63.9	26.7	61.8	25.7	57.5	23.7
		-11.8	-13.0	74.5	30.2	70.2	28.2	66.0	26.3	63.9	25.3	61.8	24.4	57.5	22.6
		-9.8	-11.0	74.5	28.6	70.2	26.8	66.0	24.9	63.9	24.0	61.8	23.2	57.5	21.4
		-9.5	-10.0	74.5	27.8	70.2	26.0	66.0	24.3	63.9	23.4	61.8	22.6	57.5	20.9
		-8.5	-9.1	74.5	27.1	70.2	25.4	66.0	23.7	63.9	22.8	61.8	22.0	57.5	20.4
		-7.0	-7.6	74.5	26.0	70.2	24.4	66.0	22.7	63.9	21.9	61.8	21.1	57.5	19.6
		-5.0	-5.6	74.5	24.6	70.2	23.0	66.0	21.5	63.9	20.8	61.8	20.0	57.5	18.6
		-3.0	-3.7	74.5	23.3	70.2	21.8	66.0	20.4	63.9	19.7	61.8	19.0	57.5	17.7
		0.0	-0.7	74.5	21.4	70.2	20.1	66.0	18.8	63.9	18.2	61.8	17.5	57.5	16.3
		3.0	2.2	74.5	19.7	70.2	18.5	66.0	17.4	63.9	16.8	61.8	16.2	57.5	15.1
		5.0	4.1	74.5	18.7	70.2	17.6	66.0	16.5	63.9	16.0	61.8	15.4	57.5	14.4
		7.0	6.0	74.5	17.7	70.2	16.7	66.0	15.7	63.9	15.2	61.8	14.7	57.5	13.7
		9.0	7.9	74.5	16.9	70.2	15.9	66.0	14.9	63.9	14.5	61.8	14.0	57.5	13.1
		11.0	9.8	74.5	16.0	70.2	15.1	66.0	14.2	63.9	13.8	61.8	13.4	57.5	12.5
		13.0	11.8	74.5	15.2	70.2	14.4	66.0	13.6	63.9	13.1	61.8	12.7	57.5	11.9
		15.0	13.7	74.5	14.5	70.2	13.7	66.0	13.0	63.9	12.6	61.8	12.2	57.5	11.4

4TW31482-2A

4 Capacity tables

4 - 3 Heating capacity tables

REYQ44P8

TC: Total Capacity: kW ; PI: Power Input: kW (compressor + outdoor fan motor)

Combination (%)	Capacity index (kW)	Outdoor air temp.		Indoor air temperature: °CDB											
				16.0		18.0		20.0		21.0		22.0		24.0	
				TC	PI	TC	PI	TC	PI	TC	PI	TC	PI	TC	PI
		°CDB	°CWB	kW	kW	kW	kW	kW	kW	kW	kW	kW	kW	kW	kW
130	1430 (161.20)	-19.8	-20.0	82.1	19.4	81.8	21.1	81.5	22.9	81.3	23.8	81.2	24.7	80.9	26.4
		-18.8	-19.0	83.6	20.0	83.3	21.7	82.9	23.4	82.8	24.3	82.6	25.2	82.3	26.9
		-16.7	-17.0	86.8	21.2	86.4	22.8	86.1	24.5	86.0	25.3	85.8	26.2	85.5	27.8
		-13.7	-15.0	90.3	22.4	90.0	24.0	89.7	25.6	89.5	26.4	89.4	27.2	89.0	28.8
		-11.8	-13.0	94.2	23.6	93.9	25.2	93.6	26.7	93.4	27.5	93.3	28.2	93.0	29.7
		-9.8	-11.0	98.5	24.9	98.2	26.3	97.9	27.8	97.7	28.5	97.6	29.2	97.3	30.7
		-9.5	-10.0	101	25.5	101	26.9	100	28.3	100	29.1	99.9	29.8	99.6	31.2
		-8.5	-9.1	103	26.0	103	27.4	102	28.8	102	29.5	102	30.2	102	31.6
		-7.0	-7.6	107	27.0	106	28.3	106	29.6	106	30.3	106	31.0	105	32.3
		-5.0	-5.6	112	28.1	112	29.4	111	30.7	111	31.3	111	31.9	111	33.2
		-3.0	-3.7	117	29.2	117	30.4	117	31.6	117	32.2	116	32.8	116	34.1
		0.0	-0.7	127	30.8	126	32.0	126	33.1	126	33.6	126	34.2	125	35.3
		3.0	2.2	136	32.3	136	33.3	136	34.4	135	34.9	135	35.4	135	36.4
		5.0	4.1	143	33.2	143	34.2	142	35.2	142	35.7	142	36.2	142	37.1
		7.0	6.0	150	34.1	150	35.0	149	35.9	149	36.4	149	36.9	149	37.8
		9.0	7.9	157	34.9	157	35.8	157	36.7	157	37.1	156	37.6	156	38.4
		11.0	9.8	165	35.6	165	36.5	165	37.3	164	37.8	164	38.2	156	36.3
		13.0	11.8	174	36.4	173	37.2	173	38.0	173	38.4	168	37.1	156	34.1
		15.0	13.7	182	37.1	182	37.9	179	37.9	174	36.5	168	35.0	156	32.2
120	1320 (148.80)	-19.8	-20.0	81.7	21.8	81.4	23.4	81.1	25.0	81.0	25.8	80.8	26.7	80.5	28.3
		-18.8	-19.0	83.1	22.3	82.9	23.9	82.6	25.5	82.4	26.3	82.3	27.1	82.0	28.7
		-16.7	-17.0	86.3	23.4	86.0	24.9	85.7	26.5	85.6	27.3	85.5	28.0	85.2	29.6
		-13.7	-15.0	89.9	24.5	89.6	26.0	89.3	27.5	89.2	28.2	89.0	29.0	88.7	30.4
		-11.8	-13.0	93.8	25.7	93.5	27.1	93.2	28.5	93.1	29.2	92.9	29.9	92.6	31.3
		-9.8	-11.0	98.1	26.8	97.8	28.2	97.5	29.5	97.4	30.2	97.2	30.9	96.9	32.2
		-9.5	-10.0	100	27.4	100	28.7	99.8	30.0	99.7	30.7	99.5	31.4	99.2	32.7
		-8.5	-9.1	103	27.9	102	29.2	102	30.5	102	31.1	102	31.8	101	33.1
		-7.0	-7.6	106	28.8	106	30.0	106	31.2	106	31.9	105	32.5	105	33.7
		-5.0	-5.6	112	29.8	111	31.0	111	32.2	111	32.8	111	33.4	110	34.5
		-3.0	-3.7	117	30.8	117	32.0	116	33.1	116	33.6	116	34.2	116	35.3
		0.0	-0.7	126	32.3	126	33.4	125	34.4	125	34.9	125	35.4	125	36.5
		3.0	2.2	136	33.7	135	34.7	135	35.6	135	36.1	135	36.6	135	37.5
		5.0	4.1	142	34.5	142	35.4	142	36.4	142	36.8	142	37.3	141	38.2
		7.0	6.0	150	35.3	149	36.2	149	37.1	149	37.5	149	37.9	144	37.1
		9.0	7.9	157	36.1	157	36.9	156	37.7	156	38.1	155	38.1	144	35.0
		11.0	9.8	165	36.8	164	37.6	164	38.4	160	37.4	155	35.9	144	33.0
		13.0	11.8	173	37.5	173	38.2	166	36.5	160	35.1	155	33.8	144	31.0
		15.0	13.7	182	38.1	176	37.1	166	34.5	160	33.2	155	31.9	144	29.3
110	1210 (136.40)	-19.8	-20.0	81.3	24.2	81.0	25.6	80.7	27.1	80.6	27.9	80.5	28.6	80.2	30.1
		-18.8	-19.0	82.7	24.6	82.5	26.1	82.2	27.6	82.1	28.3	81.9	29.0	81.7	30.5
		-16.7	-17.0	85.9	25.7	85.6	27.1	85.4	28.5	85.2	29.2	85.1	29.9	84.8	31.3
		-13.7	-15.0	89.5	26.7	89.2	28.1	88.9	29.4	88.8	30.1	88.7	30.8	88.4	32.1
		-11.8	-13.0	93.4	27.8	93.1	29.1	92.8	30.3	92.7	31.0	92.6	31.6	92.3	32.9
		-9.8	-11.0	97.7	28.8	97.4	30.0	97.1	31.3	97.0	31.9	96.9	32.5	96.6	33.7
		-9.5	-10.0	100.0	29.3	99.7	30.5	99.4	31.7	99.3	32.3	99.2	32.9	98.9	34.1
		-8.5	-9.1	102	29.8	102	31.0	102	32.2	101	32.7	101	33.3	101	34.5
		-7.0	-7.6	106	30.6	106	31.7	105	32.8	105	33.4	105	34.0	105	35.1
		-5.0	-5.6	111	31.6	111	32.6	111	33.7	110	34.3	110	34.8	110	35.9
		-3.0	-3.7	116	32.5	116	33.5	116	34.5	116	35.0	116	35.6	115	36.6
		0.0	-0.7	126	33.9	125	34.8	125	35.8	125	36.2	125	36.7	125	37.7
		3.0	2.2	135	35.1	135	36.0	135	36.9	135	37.3	135	37.7	132	37.7
		5.0	4.1	142	35.9	142	36.7	142	37.5	141	38.0	141	38.4	132	35.5
		7.0	6.0	149	36.6	149	37.4	149	38.2	147	38.0	142	36.4	132	33.5
		9.0	7.9	157	37.3	156	38.0	152	37.2	147	35.7	142	34.3	132	31.6
		11.0	9.8	164	37.9	162	37.8	152	35.0	147	33.7	142	32.4	132	29.8
		13.0	11.8	171	38.1	162	35.5	152	32.9	147	31.7	142	30.5	132	28.1
		15.0	13.7	171	35.9	162	33.5	152	31.1	147	30.0	142	28.8	132	26.6
100	1100 (124.00)	-19.8	-20.0	80.8	26.5	80.6	27.9	80.4	29.3	80.2	29.9	80.1	30.6	79.9	32.0
		-18.8	-19.0	82.3	27.0	82.0	28.3	81.8	29.7	81.7	30.3	81.6	31.0	81.3	32.3
		-16.7	-17.0	85.5	27.9	85.2	29.2	85.0	30.5	84.9	31.1	84.7	31.8	84.5	33.0
		-13.7	-15.0	89.0	28.9	88.8	30.1	88.5	31.3	88.4	31.9	88.3	32.5	88.1	33.8
		-11.8	-13.0	93.0	29.8	92.7	31.0	92.5	32.2	92.3	32.8	92.2	33.3	92.0	34.5
		-9.8	-11.0	97.3	30.8	97.0	31.9	96.8	33.0	96.6	33.6	96.5	34.1	96.3	35.3
		-9.5	-10.0	99.5	31.3	99.3	32.3	99.1	33.4	98.9	34.0	98.8	34.5	98.6	35.6
		-8.5	-9.1	102	31.7	101	32.8	101	33.8	101	34.4	101	34.9	101	36.0
		-7.0	-7.6	105	32.4	105	33.4	105	34.4	105	35.0	105	35.5	104	36.5
		-5.0	-5.6	111	33.3	110	34.3	110	35.2	110	35.7	110	36.2	110	37.2
		-3.0	-3.7	116	34.1	116	35.1	116	36.0	115	36.5	115	36.9	115	37.8
		0.0	-0.7	125	35.4	125	36.2	125	37.1	125	37.5	125	38.0	120	36.9
		3.0	2.2	135	36.5	135	37.3	134	38.1	134	38.2	129	36.7	120	33.7
		5.0	4.1	142	37.2	141	38.0	138	37.4	134	35.9	129	34.5	120	31.7
		7.0	6.0	149	37.9	147	37.9	138	35.2	134	33.9	129	32.5	120	29.9
		9.0	7.9	156	38.3	147	35.7	138	33.2	134	31.9	129	30.7	120	28.3
		11.0	9.8	156	36.1	147	33.7	138	31.3	134	30.1	129	29.0	120	26.7
		13.0	11.8	156	34.0	147	31.7	138	29.5	134	28.4	129	27.3	120	25.2
		15.0	13.7	156	32.1	147	29.9	138	27.9	134	26.9	129	25.9	120	23.9

4TW31482-2A

NOTES - ANMERKUNGEN - Σημειώσεις - NOTAS - REMARQUES - NOTE - OPMERKINGEN - примечания - NOTLAR

1 is shown as reference. When selecting the unit models, avoid the Outdoor air temperature range shown by .

dient als Verweis. Vermeiden Sie bei der Auswahl der Gerätemodelle den als markierten Temperaturbereich der Außenluft

Η είναι ενδεικτική. κατά την επιλογή των μοντέλων των μονάδων, αποφύγετε το εύρος θερμοκρασίας εξωτερικού αέρα που υποδεικνύεται

se muestra como referencia. Cuando seleccione los modelos de unidad, evite el intervalo de temperaturas del aire exterior indicado mediante

est montré comme référence.Lors du choix des modèles d'unités, évitez la plage de températures de l'air extérieur illustré par

valori riportati unicamente come riferimento. Nel selezionare i modelli delle unità, non considerare i valori di temperatura dell'aria esterna indicati con il colore

is als referentie getoond. Wanneer modellen van eenheden worden gekozen, vermijd dan het bereik van buitenluchttemperaturen geïllustreerd door

показан как. При выборе модели устройства избегайте внешнюю температуру воздуха, указанную в

referans olarak gösterilmektedir. Ünite modellerini seçerken, belirtilen Dış hava sıcaklığı aralığından kaçının

2 The above table shows the average value of conditions which may occur.

Die obige Tabelle zeigt den Durchschnittswert der Bedingungen, die auftreten können.

Στον παραπάνω πίνακα αναγράφεται η μέση τιμή για συνθήκες που μπορεί να προκύψουν.

La tabla de arriba muestra el valor medio de condiciones que pueden ocurrir.

Le tableau ci-dessus donne la valeur moyenne pour des conditions qui peuvent survenir.

La tabella in alto mostra il valore delle condizioni medie che si possono riscontrare.

De tabel hierboven geeft de gemiddelde waarde aan van situaties die kunnen voorvallen.

Таблица расположенная выше показывает среднее значение условий, которые могут наступить.

Yukarıdaki tablo meydana gelebilecek koşulların ortalama değerini göstermektedir.

4 Capacity tables

4 - 3 Heating capacity tables

REYQ44P8

TC: Total Capacity: kW ; PI: Power Input: kW (compressor + outdoor fan motor)

Combination (%)	Capacity index (kW)	Outdoor air temp.		Indoor air temperature: °CDB											
				16.0		18.0		20.0		21.0		22.0		24.0	
				TC	PI	TC	PI	TC	PI	TC	PI	TC	PI	TC	PI
		°CDB	°CWB	kW	kW	kW	kW	kW	kW	kW	kW	kW	kW	kW	kW
90%	990 (111.60)	-19.8	-20.0	80.4	28.9	80.2	30.1	80.0	31.4	79.9	32.0	79.8	32.6	79.5	33.8
		-18.8	-19.0	81.9	29.3	81.6	30.5	81.4	31.7	81.3	32.3	81.2	32.9	81.0	34.1
		-16.7	-17.0	85.1	30.2	84.8	31.3	84.6	32.5	84.5	33.0	84.4	33.6	84.2	34.8
		-13.7	-15.0	88.6	31.0	88.4	32.1	88.2	33.2	88.1	33.8	88.0	34.3	87.7	35.4
		-11.8	-13.0	92.5	31.9	92.3	32.9	92.1	34.0	92.0	34.5	91.9	35.1	91.7	36.1
		-9.8	-11.0	96.8	32.7	96.6	33.8	96.4	34.8	96.3	35.3	96.2	35.8	96.0	36.8
		-9.5	-10.0	99.1	33.2	98.9	34.2	98.7	35.1	98.6	35.6	98.5	36.1	98.2	37.1
		-8.5	-9.1	101	33.6	101	34.5	101	35.5	101	36.0	101	36.4	100	37.4
		-7.0	-7.6	105	34.2	105	35.1	105	36.0	104	36.5	104	37.0	104	37.9
		-5.0	-5.6	110	35.0	110	35.9	110	36.8	110	37.2	110	37.6	108	37.9
		-3.0	-3.7	116	35.8	115	36.6	115	37.4	115	37.9	115	38.3	108	35.7
		0.0	-0.7	125	36.9	125	37.7	124	38.4	120	36.9	116	35.4	108	32.5
		3.0	2.2	134	37.9	132	37.7	124	35.0	120	33.7	116	32.3	108	29.8
		5.0	4.1	140	38.1	132	35.5	124	33.0	120	31.7	116	30.5	108	28.1
		7.0	6.0	140	35.9	132	33.4	124	31.1	120	29.9	116	28.8	108	26.6
		9.0	7.9	140	33.8	132	31.5	124	29.3	120	28.3	116	27.2	108	25.1
		11.0	9.8	140	31.9	132	29.8	124	27.7	120	26.7	116	25.7	108	23.8
		13.0	11.8	140	30.0	132	28.1	124	26.2	120	25.2	116	24.3	108	22.5
		15.0	13.7	140	28.4	132	26.6	124	24.8	120	23.9	116	23.0	108	21.3
80%	880 (99.20)	-19.8	-20.0	80.0	31.3	79.8	32.4	79.6	33.5	79.5	34.0	79.4	34.6	79.2	35.7
		-18.8	-19.0	81.4	31.7	81.2	32.7	81.1	33.8	81.0	34.3	80.9	34.9	80.7	35.9
		-16.7	-17.0	84.6	32.4	84.4	33.4	84.2	34.5	84.1	35.0	84.0	35.5	83.8	36.5
		-13.7	-15.0	88.2	33.2	88.0	34.2	87.8	35.1	87.7	35.6	87.6	36.1	87.4	37.1
		-11.8	-13.0	92.1	33.9	91.9	34.9	91.7	35.8	91.6	36.3	91.5	36.8	91.3	37.7
		-9.8	-11.0	96.4	34.7	96.2	35.6	96.0	36.5	95.9	37.0	95.8	37.4	95.6	38.3
		-9.5	-10.0	98.7	35.1	98.5	36.0	98.3	36.8	98.2	37.3	98.1	37.7	96.2	37.6
		-8.5	-9.1	101	35.4	101	36.3	100	37.1	100	37.6	100	38.0	96.2	36.6
		-7.0	-7.6	105	36.0	104	36.8	104	37.6	104	38.1	103	38.1	96.2	35.0
		-5.0	-5.6	110	36.7	110	37.5	109	38.3	107	37.3	103	35.8	96.2	32.9
		-3.0	-3.7	115	37.4	115	38.1	110	36.6	107	35.2	103	33.8	96.2	31.1
		0.0	-0.7	124	38.4	117	35.9	110	33.3	107	32.1	103	30.8	96.2	28.4
		3.0	2.2	125	35.1	117	32.8	110	30.5	107	29.3	103	28.2	96.2	26.0
		5.0	4.1	125	33.1	117	30.9	110	28.7	107	27.7	103	26.7	96.2	24.6
		7.0	6.0	125	31.2	117	29.2	110	27.2	107	26.2	103	25.2	96.2	23.3
		9.0	7.9	125	29.5	117	27.5	110	25.7	107	24.8	103	23.9	96.2	22.1
		11.0	9.8	125	27.8	117	26.1	110	24.3	107	23.5	103	22.6	96.2	21.0
		13.0	11.8	125	26.3	117	24.6	110	23.0	107	22.2	103	21.4	96.2	19.8
		15.0	13.7	125	24.9	117	23.3	110	21.8	107	21.1	103	20.3	96.2	18.9
70%	770 (86.80)	-19.8	-20.0	79.6	33.7	79.4	34.6	79.2	35.6	79.1	36.1	79.0	36.5	78.9	37.5
		-18.8	-19.0	81.0	34.0	80.8	34.9	80.7	35.9	80.6	36.3	80.5	36.8	80.3	37.7
		-16.7	-17.0	84.2	34.7	84.0	35.6	83.9	36.5	83.8	36.9	83.7	37.3	83.5	38.2
		-13.7	-15.0	87.8	35.3	87.6	36.2	87.4	37.0	87.3	37.5	87.2	37.9	84.2	36.8
		-11.8	-13.0	91.7	36.0	91.5	36.8	91.3	37.6	91.3	38.1	90.4	38.0	84.2	34.8
		-9.8	-11.0	96.0	36.7	95.8	37.5	95.6	38.2	93.5	37.3	90.4	35.9	84.2	33.0
		-9.5	-10.0	98.3	37.0	98.1	37.8	96.6	37.7	93.5	36.3	90.4	34.8	84.2	32.0
		-8.5	-9.1	100	37.3	100	38.1	96.6	36.7	93.5	35.3	90.4	33.9	84.2	31.2
		-7.0	-7.6	104	37.8	103	37.9	96.6	35.1	93.5	33.8	90.4	32.5	84.2	29.9
		-5.0	-5.6	109	38.2	103	35.6	96.6	33.1	93.5	31.8	90.4	30.6	84.2	28.2
		-3.0	-3.7	109	36.0	103	33.6	96.6	31.2	93.5	30.1	90.4	28.9	84.2	26.7
		0.0	-0.7	109	32.8	103	30.6	96.6	28.5	93.5	27.5	90.4	26.5	84.2	24.4
		3.0	2.2	109	30.0	103	28.1	96.6	26.2	93.5	25.2	90.4	24.3	84.2	22.5
		5.0	4.1	109	28.3	103	26.5	96.6	24.7	93.5	23.9	90.4	23.0	84.2	21.3
		7.0	6.0	109	26.8	103	25.1	96.6	23.4	93.5	22.6	90.4	21.8	84.2	20.2
		9.0	7.9	109	25.3	103	23.7	96.6	22.2	93.5	21.4	90.4	20.7	84.2	19.2
		11.0	9.8	109	24.0	103	22.5	96.6	21.0	93.5	20.3	90.4	19.6	84.2	18.2
		13.0	11.8	109	22.7	103	21.3	96.6	19.9	93.5	19.3	90.4	18.6	84.2	17.3
		15.0	13.7	109	21.5	103	20.2	96.6	18.9	93.5	18.3	90.4	17.7	84.2	16.5
60%	660 (74.40)	-19.8	-20.0	79.1	36.1	79.0	36.9	78.8	37.7	78.8	38.1	77.5	37.6	72.2	34.5
		-18.8	-19.0	80.6	36.3	80.4	37.1	80.3	37.9	80.1	38.3	77.5	36.8	72.2	33.8
		-16.7	-17.0	83.8	36.9	83.6	37.7	82.8	38.0	80.1	36.5	77.5	35.0	72.2	32.2
		-13.7	-15.0	87.3	37.5	87.2	38.2	82.8	36.1	80.1	34.7	77.5	33.3	72.2	30.6
		-11.8	-13.0	91.3	38.1	88.1	36.8	82.8	34.2	80.1	32.9	77.5	31.6	72.2	29.1
		-9.8	-11.0	93.4	37.3	88.1	34.8	82.8	32.3	80.1	31.1	77.5	29.9	72.2	27.6
		-9.5	-10.0	93.4	36.2	88.1	33.8	82.8	31.4	80.1	30.2	77.5	29.1	72.2	26.8
		-8.5	-9.1	93.4	35.3	88.1	32.9	82.8	30.6	80.1	29.5	77.5	28.4	72.2	26.2
		-7.0	-7.6	93.4	33.8	88.1	31.5	82.8	29.3	80.1	28.2	77.5	27.2	72.2	25.1
		-5.0	-5.6	93.4	31.8	88.1	29.7	82.8	27.7	80.1	26.7	77.5	25.7	72.2	23.7
		-3.0	-3.7	93.4	30.0	88.1	28.1	82.8	26.2	80.1	25.2	77.5	24.3	72.2	22.5
		0.0	-0.7	93.4	27.5	88.1	25.7	82.8	24.0	80.1	23.2	77.5	22.3	72.2	20.7
		3.0	2.2	93.4	25.2	88.1	23.6	82.8	22.1	80.1	21.3	77.5	20.6	72.2	19.1
		5.0	4.1	93.4	23.9	88.1	22.4	82.8	20.9	80.1	20.2	77.5	19.5	72.2	18.1
		7.0	6.0	93.4	22.6	88.1	21.2	82.8	19.9	80.1	19.2	77.5	18.5	72.2	17.2
		9.0	7.9	93.4	21.4	88.1	20.1	82.8	18.9	80.1	18.2	77.5	17.6	72.2	16.4
		11.0	9.8	93.4	20.3	88.1	19.1	82.8	17.9	80.1	17.3	77.5	16.8	72.2	15.6
		13.0	11.8	93.4	19.2	88.1	18.1	82.8	17.0	80.1	16.5	77.5	15.9	72.2	14.9
		15.0	13.7	93.4	18.3	88.1	17.3	82.8	16.2	80.1	15.7	77.5	15.2	72.2	14.2
50%	550 (62.00)	-19.8	-20.0	77.9	37.8	73.4	35.2	69.0	32.7	66.8	31.5	64.6	30.3	60.1	27.9
		-18.8	-19.0	77.9	37.0	73.4	34.5	69.0	32.0	66.8	30.8	64.6	29.6	60.1	27.3
		-16.7	-17.0	77.9	35.2	73.4	32.9	69.0	30.6	66.8	29.4	64.6	28.3	60.1	26.1
		-13.7	-15.0	77.9	33.5	73.4	31.3	69.0	29.1	66.8	28.0	64.6	27.0	60.1	24.9
		-11.8	-13.0	77.9	31.8	73.4	29.7	69.0	27.6	66.8	26.6	64.6	25.7	60.1	23.7
		-9.8	-11.0	77.9	30.1	73.4	28.1	69.0	26.2	66.8	25.3	64.6	24.3	60.1	22.5
		-9.5	-10.0	77.9	29.3	73.4	27.4	69.0	25.5	66.8	24.6	64.6	23.7	60.1	22.0
		-8.5	-9.1	77.9	28.5	73.4	26.7	69.0	24.9	66.8	24.0	64.6	23.1	60.1	21.4
		-7.0	-7.6	77.9	27.3	73.4	25.6	69.0	23.9	66.8	23.1	64.6	22.2	60.1	20.6
		-5.0	-5.6	77.9	25.8	73.4	24.2	69.0	22.6	66.8	21.8	64.6	21.1	60.1	19.5
		-3.0	-3.7	77.9	24.5	73.4	22.9	69.0	21.4	66.8	20.7	64.6	20.0	60.1	18.6
		0.0	-0.7	77.9	22.4	73.4	21.1	69.0	19.7	66.8	19.1	64.6	18.4	60.1	17.1
		3.0	2.2	77.9	20.7	73.4	19.5	69.0	18.2	66.8	17.6	64.6	17.1	60.1	15.9
		5.0	4.1	77.9	19.6	73.4	18.5	69.0	17.3	66.8	16.8	64.6	16.2	60.1	15.1
		7.0	6.0	77.9	18.6	73.4	17.6	69.0	16.5	66.8	16.0	64.6	15.5	60.1	14.4
		9.0	7.9	77.9	17.7	73.4	16.7	69.0	15.7	66.8	15.2	64.6	14.7	60.1	13.8
		11.0	9.8	77.9	16.9	73.4	15.9	69.0	15.0	66.8	14.5	64.6	14.0	60.1	13.1
		13.0	11.8	77.9	16.0	73.4	15.1	69.0	14.2	66.8	13.8	64.6	13.4	60.1	12.5
		15.0	13.7	77.9	15.3	73.4	14.4	69.0	13.6	66.8	13.2	64.6	12.8	60.1	12.0

4TW31482-2A

4 Capacity tables

4 - 3 Heating capacity tables

REYQ46P8

TC: Total Capacity: kW ; PI: Power Input: kW (compressor + outdoor fan motor)

Combination (%)	Capacity index (kW)	Outdoor air temp.		Indoor air temperature: °CDB											
				16.0		18.0		20.0		21.0		22.0		24.0	
				TC	PI	TC	PI	TC	PI	TC	PI	TC	PI	TC	PI
		°CDB	°CWB	kW	kW	kW	kW	kW	kW	kW	kW	kW	kW	kW	kW
130	1495 (169.00)	-19.8	-20.0	87.7	21.5	87.3	23.3	87.0	25.2	86.9	26.1	86.7	27.0	86.4	28.9
		-18.8	-19.0	89.3	22.1	88.9	23.9	88.6	25.7	88.4	26.6	88.3	27.5	87.9	29.4
		-16.7	-17.0	92.7	23.3	92.4	25.1	92.0	26.9	91.9	27.7	91.7	28.6	91.4	30.4
		-13.7	-15.0	96.5	24.7	96.2	26.3	95.8	28.0	95.7	28.8	95.5	29.7	95.2	31.4
		-11.8	-13.0	101	26.0	100	27.6	100	29.2	99.9	30.0	99.7	30.8	99.4	32.4
		-9.8	-11.0	105	27.3	105	28.8	105	30.3	104	31.1	104	31.9	104	33.4
		-9.5	-10.0	108	27.9	107	29.4	107	30.9	107	31.7	107	32.4	106	33.9
		-8.5	-9.1	110	28.5	110	30.0	109	31.4	109	32.2	109	32.9	109	34.3
		-7.0	-7.6	114	29.4	114	30.9	113	32.3	113	33.0	113	33.7	113	35.1
		-5.0	-5.6	120	30.7	119	32.0	119	33.4	119	34.0	119	34.7	118	36.0
		-3.0	-3.7	125	31.8	125	33.1	125	34.4	125	35.0	124	35.6	124	36.9
		0.0	-0.7	135	33.5	135	34.7	134	35.9	134	36.5	134	37.0	134	38.2
		3.0	2.2	145	35.0	145	36.1	145	37.2	145	37.8	144	38.3	144	39.4
		5.0	4.1	152	36.0	152	37.0	152	38.1	152	38.6	151	39.1	151	40.1
		7.0	6.0	160	36.9	160	37.9	159	38.9	159	39.4	159	39.8	159	40.8
		9.0	7.9	168	37.7	167	38.7	167	39.6	167	40.1	167	40.6	164	40.6
		11.0	9.8	176	38.5	176	39.4	175	40.3	175	40.8	175	41.2	164	38.3
		13.0	11.8	185	39.3	185	40.2	184	41.0	182	40.8	176	39.2	164	36.0
		15.0	13.7	194	40.1	194	40.9	189	40.1	182	38.5	176	37.0	164	34.0
120	1380 (156.00)	-19.8	-20.0	87.2	24.0	86.9	25.7	86.6	27.4	86.5	28.3	86.3	29.1	86.0	30.8
		-18.8	-19.0	88.8	24.5	88.5	26.2	88.2	27.9	88.0	28.7	87.9	29.6	87.6	31.3
		-16.7	-17.0	92.2	25.7	91.9	27.3	91.6	28.9	91.5	29.8	91.3	30.6	91.0	32.2
		-13.7	-15.0	96.1	26.9	95.8	28.5	95.4	30.0	95.3	30.8	95.1	31.6	94.8	33.1
		-11.8	-13.0	100	28.1	100.0	29.6	99.7	31.1	99.5	31.8	99.4	32.6	99.0	34.1
		-9.8	-11.0	105	29.3	105	30.8	104	32.2	104	32.9	104	33.6	104	35.0
		-9.5	-10.0	107	29.9	107	31.3	107	32.7	107	33.4	106	34.1	106	35.5
		-8.5	-9.1	110	30.5	109	31.8	109	33.2	109	33.8	109	34.5	108	35.9
		-7.0	-7.6	114	31.3	113	32.6	113	33.9	113	34.6	113	35.2	112	36.5
		-5.0	-5.6	119	32.5	119	33.7	119	35.0	118	35.6	118	36.2	118	37.4
		-3.0	-3.7	125	33.5	125	34.7	124	35.9	124	36.5	124	37.1	124	38.2
		0.0	-0.7	135	35.1	134	36.2	134	37.3	134	37.8	134	38.4	133	39.5
		3.0	2.2	145	36.5	145	37.5	144	38.5	144	39.0	144	39.5	144	40.6
		5.0	4.1	152	37.4	152	38.3	151	39.3	151	39.8	151	40.3	151	41.2
		7.0	6.0	160	38.2	159	39.1	159	40.0	159	40.5	159	41.0	152	39.1
		9.0	7.9	167	39.0	167	39.9	167	40.7	167	41.2	163	40.2	152	36.9
		11.0	9.8	176	39.7	175	40.6	174	41.0	168	39.4	163	37.9	152	34.8
		13.0	11.8	185	40.5	184	41.3	174	38.6	168	37.1	163	35.6	152	32.8
		15.0	13.7	193	41.2	185	39.2	174	36.4	168	35.0	163	33.7	152	31.0
110	1265 (143.00)	-19.8	-20.0	86.8	26.5	86.5	28.1	86.2	29.6	86.1	30.4	85.9	31.2	85.7	32.8
		-18.8	-19.0	88.4	27.0	88.1	28.5	87.8	30.1	87.7	30.9	87.5	31.6	87.2	33.2
		-16.7	-17.0	91.8	28.1	91.5	29.6	91.2	31.0	91.1	31.8	90.9	32.5	90.7	34.0
		-13.7	-15.0	95.6	29.2	95.3	30.6	95.1	32.0	94.9	32.7	94.8	33.4	94.5	34.9
		-11.8	-13.0	99.8	30.3	99.5	31.7	99.3	33.0	99.1	33.7	99.0	34.4	98.7	35.7
		-9.8	-11.0	104	31.4	104	32.7	104	34.0	104	34.6	104	35.3	103	36.6
		-9.5	-10.0	107	32.0	107	33.2	106	34.5	106	35.1	106	35.7	106	37.0
		-8.5	-9.1	109	32.4	109	33.7	109	34.9	108	35.5	108	36.2	108	37.4
		-7.0	-7.6	113	33.2	113	34.4	113	35.6	112	36.2	112	36.8	112	38.0
		-5.0	-5.6	119	34.3	118	35.4	118	36.6	118	37.1	118	37.7	118	38.8
		-3.0	-3.7	124	35.3	124	36.3	124	37.4	124	38.0	124	38.5	123	39.6
		0.0	-0.7	134	36.7	134	37.7	134	38.7	134	39.2	133	39.7	133	40.7
		3.0	2.2	144	38.0	144	38.9	144	39.8	144	40.3	144	40.8	139	39.7
		5.0	4.1	152	38.8	151	39.7	151	40.6	151	41.0	149	40.8	139	37.4
		7.0	6.0	159	39.6	159	40.4	159	41.2	154	40.0	149	38.4	139	35.3
		9.0	7.9	167	40.3	167	41.1	160	39.2	154	37.7	149	36.2	139	33.3
		11.0	9.8	175	41.0	170	39.8	160	37.0	154	35.5	149	34.2	139	31.4
		13.0	11.8	180	40.2	170	37.4	160	34.8	154	33.5	149	32.2	139	29.6
		15.0	13.7	180	37.9	170	35.3	160	32.9	154	31.6	149	30.4	139	28.1
100	1150 (130.00)	-19.8	-20.0	86.3	29.0	86.1	30.4	85.8	31.8	85.7	32.6	85.6	33.3	85.3	34.7
		-18.8	-19.0	87.9	29.5	87.7	30.9	87.4	32.3	87.3	33.0	87.1	33.7	86.9	35.1
		-16.7	-17.0	91.3	30.4	91.1	31.8	90.8	33.1	90.7	33.8	90.6	34.5	90.3	35.8
		-13.7	-15.0	95.2	31.5	94.9	32.7	94.7	34.0	94.5	34.7	94.4	35.3	94.1	36.6
		-11.8	-13.0	99.4	32.5	99.1	33.7	98.9	34.9	98.7	35.6	98.6	36.2	98.4	37.4
		-9.8	-11.0	104	33.5	104	34.7	103	35.8	103	36.4	103	37.0	103	38.2
		-9.5	-10.0	106	34.0	106	35.1	106	36.3	106	36.8	106	37.4	105	38.6
		-8.5	-9.1	109	34.4	108	35.5	108	36.7	108	37.2	108	37.8	108	38.9
		-7.0	-7.6	113	35.2	112	36.2	112	37.3	112	37.9	112	38.4	112	39.5
		-5.0	-5.6	118	36.1	118	37.1	118	38.2	118	38.7	118	39.2	117	40.2
		-3.0	-3.7	124	37.0	124	38.0	124	38.9	123	39.4	123	39.9	123	40.9
		0.0	-0.7	134	38.3	134	39.2	133	40.1	133	40.6	133	41.0	126	38.8
		3.0	2.2	144	39.5	144	40.3	143	41.2	140	40.2	136	38.6	126	35.5
		5.0	4.1	151	40.2	151	41.0	145	39.4	140	37.9	136	36.4	126	33.4
		7.0	6.0	159	40.9	154	40.0	145	37.1	140	35.7	136	34.3	126	31.6
		9.0	7.9	164	40.4	154	37.7	145	35.0	140	33.7	136	32.4	126	29.8
		11.0	9.8	164	38.1	154	35.5	145	33.0	140	31.8	136	30.6	126	28.2
		13.0	11.8	164	35.8	154	33.4	145	31.1	140	30.0	136	28.8	126	26.6
		15.0	13.7	164	33.9	154	31.6	145	29.4	140	28.4	136	27.3	126	25.3

4TW31482-2A

NOTES - ANMERKUNGEN - Σημειώσεις - NOTAS - REMARQUES - NOTE - OPMERKINGEN - примечания - NOTLAR

1 is shown as reference. When selecting the unit models, avoid the Outdoor air temperature range shown by .

dient als Verweis. Vermeiden Sie bei der Auswahl der Gerätemodelle den als markierten Temperaturbereich der Außenluft

Η είναι ενδεικτική. κατά την επιλογή των μοντέλων των μονάδων, αποφύγετε το εύρος θερμοκρασίας εξωτερικού αέρα που υποδεικνύεται

se muestra como referencia. Cuando seleccione los modelos de unidad, evite el intervalo de temperaturas del aire exterior indicado mediante

est montré comme référence.Lors du choix des modèles d'unités, évitez la plage de températures de l'air extérieur illustré par

valori riportati unicamente come riferimento. Nel selezionare i modelli delle unità, non considerare i valori di temperatura dell'aria esterna indicati con il colore

is als referentie getoond. Wanneer modellen van eenheden worden gekozen, vermijd dan het bereik van buitenluchttemperaturen geïllustreerd door

показан как. При выборе модели устройства избегайте внешнюю температуру воздуха, указанную в

referans olarak gösterilmektedir. Ünite modellerini seçerken, belirtilen Dış hava sıcaklığı aralığından kaçının

2 The above table shows the average value of conditions which may occur.

Die obige Tabelle zeigt den Durchschnittswert der Bedingungen, die auftreten können.

Στον παραπάνω πίνακα αναγράφεται η μέση τιμή για συνθήκες που μπορεί να προκύψουν.

La tabla de arriba muestra el valor medio de condiciones que pueden ocurrir.

Le tableau ci-dessus donne la valeur moyenne pour des conditions qui peuvent survenir.

La tabella in alto mostra il valore delle condizioni medie che si possono riscontrare.

De tabel hierboven geeft de gemiddelde waarde aan van situaties die kunnen voorvallen.

Таблица расположенная выше показывает среднее значение условий, которые могут наступить.

Yukarıdaki tablo meydana gelebilecek koşulların ortalama değerini göstermektedir.

4 Capacity tables

4 - 3 Heating capacity tables

REYQ46P8

TC: Total Capacity: kW ; PI: Power Input: kW (compressor + outdoor fan motor)

Combination (%)	Capacity index (kW)	Outdoor air temp.		Indoor air temperature: °CDB											
				16.0		18.0		20.0		21.0		22.0		24.0	
				TC	PI	TC	PI	TC	PI	TC	PI	TC	PI	TC	PI
		°CDB	°CWB	kW	kW	kW	kW	kW	kW	kW	kW	kW	kW	kW	kW
90%	1035 (117.00)	-19.8	-20.0	85.9	31.5	85.7	32.8	85.4	34.1	85.3	34.7	85.2	35.4	85.0	36.6
		-18.8	-19.0	87.5	31.9	87.2	33.2	87.0	34.5	86.9	35.1	86.8	35.7	86.5	37.0
		-16.7	-17.0	90.9	32.8	90.7	34.0	90.4	35.2	90.3	35.8	90.2	36.5	90.0	37.7
		-13.7	-15.0	94.7	33.7	94.5	34.9	94.3	36.0	94.1	36.6	94.0	37.2	93.8	38.4
		-11.8	-13.0	98.9	34.6	98.7	35.7	98.5	36.9	98.4	37.4	98.2	38.0	98.0	39.1
		-9.8	-11.0	104	35.5	103	36.6	103	37.7	103	38.2	103	38.7	103	39.8
		-9.5	-10.0	106	36.0	106	37.0	106	38.1	105	38.6	105	39.1	105	40.1
		-8.5	-9.1	108	36.4	108	37.4	108	38.4	108	38.9	108	39.4	107	40.4
		-7.0	-7.6	112	37.1	112	38.0	112	39.0	112	39.5	112	40.0	111	41.0
		-5.0	-5.6	118	37.9	118	38.8	117	39.8	117	40.2	117	40.7	114	39.8
		-3.0	-3.7	124	38.7	123	39.6	123	40.5	123	40.9	122	40.9	114	37.6
		0.0	-0.7	133	39.9	133	40.7	131	40.4	126	38.8	122	37.3	114	34.2
		3.0	2.2	144	40.9	139	39.7	131	36.8	126	35.4	122	34.1	114	31.3
		5.0	4.1	147	40.1	139	37.4	131	34.7	126	33.4	122	32.1	114	29.6
		7.0	6.0	147	37.8	139	35.2	131	32.8	126	31.5	122	30.3	114	28.0
		9.0	7.9	147	35.6	139	33.3	131	30.9	126	29.8	122	28.7	114	26.5
		11.0	9.8	147	33.6	139	31.4	131	29.3	126	28.2	122	27.1	114	25.1
		13.0	11.8	147	31.7	139	29.6	131	27.6	126	26.6	122	25.6	114	23.7
		15.0	13.7	147	30.0	139	28.0	131	26.2	126	25.2	122	24.3	114	22.5
80%	920 (104.00)	-19.8	-20.0	85.4	34.0	85.2	35.2	85.0	36.3	84.9	36.9	84.8	37.4	84.6	38.6
		-18.8	-19.0	87.0	34.4	86.8	35.5	86.6	36.6	86.5	37.2	86.4	37.8	86.2	38.9
		-16.7	-17.0	90.4	35.2	90.2	36.3	90.0	37.3	89.9	37.9	89.8	38.4	89.6	39.5
		-13.7	-15.0	94.3	36.0	94.1	37.0	93.9	38.1	93.8	38.6	93.7	39.1	93.5	40.1
		-11.8	-13.0	98.5	36.8	98.3	37.8	98.1	38.8	98.0	39.3	97.9	39.8	97.7	40.7
		-9.8	-11.0	103	37.6	103	38.6	103	39.5	103	40.0	102	40.4	101	40.6
		-9.5	-10.0	106	38.0	105	38.9	105	39.8	105	40.3	105	40.8	101	39.5
		-8.5	-9.1	108	38.4	108	39.3	107	40.2	107	40.6	107	41.1	101	38.4
		-7.0	-7.6	112	39.0	112	39.8	111	40.7	111	41.1	109	40.0	101	36.7
		-5.0	-5.6	117	39.7	117	40.5	116	40.8	112	39.2	109	37.7	101	34.6
		-3.0	-3.7	123	40.4	123	41.2	116	38.5	112	37.0	109	35.5	101	32.7
		0.0	-0.7	131	40.5	123	37.7	116	35.1	112	33.7	109	32.4	101	29.9
		3.0	2.2	131	37.0	123	34.5	116	32.1	112	30.9	109	29.7	101	27.4
		5.0	4.1	131	34.9	123	32.5	116	30.3	112	29.2	109	28.1	101	25.9
		7.0	6.0	131	32.9	123	30.7	116	28.6	112	27.6	109	26.6	101	24.6
		9.0	7.9	131	31.1	123	29.0	116	27.1	112	26.1	109	25.2	101	23.3
		11.0	9.8	131	29.4	123	27.5	116	25.6	112	24.7	109	23.9	101	22.1
		13.0	11.8	131	27.7	123	26.0	116	24.2	112	23.4	109	22.6	101	20.9
		15.0	13.7	131	26.3	123	24.6	116	23.0	112	22.2	109	21.4	101	19.9
70%	805 (91.00)	-19.8	-20.0	85.0	36.5	84.8	37.5	84.6	38.5	84.5	39.0	84.5	39.5	84.3	40.5
		-18.8	-19.0	86.6	36.9	86.4	37.8	86.2	38.8	86.1	39.3	86.0	39.8	85.9	40.8
		-16.7	-17.0	90.0	37.5	89.8	38.5	89.6	39.4	89.6	39.9	89.5	40.4	88.5	40.7
		-13.7	-15.0	93.8	38.3	93.6	39.2	93.5	40.1	93.4	40.5	93.3	41.0	88.5	38.7
		-11.8	-13.0	98.0	39.0	97.9	39.8	97.7	40.7	97.6	41.1	95.0	39.9	88.5	36.6
		-9.8	-11.0	103	39.7	102	40.5	102	40.8	98.2	39.3	95.0	37.7	88.5	34.6
		-9.5	-10.0	105	40.0	105	40.8	102	39.7	98.2	38.1	95.0	36.6	88.5	33.7
		-8.5	-9.1	107	40.3	107	41.1	102	38.6	98.2	37.1	95.0	35.7	88.5	32.8
		-7.0	-7.6	111	40.9	108	39.8	102	36.9	98.2	35.5	95.0	34.1	88.5	31.4
		-5.0	-5.6	115	40.2	108	37.4	102	34.8	98.2	33.5	95.0	32.2	88.5	29.6
		-3.0	-3.7	115	37.9	108	35.3	102	32.8	98.2	31.6	95.0	30.4	88.5	28.1
		0.0	-0.7	115	34.5	108	32.2	102	30.0	98.2	28.9	95.0	27.8	88.5	25.7
		3.0	2.2	115	31.6	108	29.6	102	27.5	98.2	26.6	95.0	25.6	88.5	23.7
		5.0	4.1	115	29.9	108	27.9	102	26.1	98.2	25.1	95.0	24.2	88.5	22.5
		7.0	6.0	115	28.2	108	26.4	102	24.7	98.2	23.8	95.0	23.0	88.5	21.3
		9.0	7.9	115	26.7	108	25.0	102	23.4	98.2	22.6	95.0	21.8	88.5	20.2
		11.0	9.8	115	25.3	108	23.7	102	22.2	98.2	21.4	95.0	20.7	88.5	19.2
		13.0	11.8	115	23.9	108	22.5	102	21.0	98.2	20.3	95.0	19.6	88.5	18.3
		15.0	13.7	115	22.7	108	21.3	102	20.0	98.2	19.3	95.0	18.7	88.5	17.4
60%	960 (78.00)	-19.8	-20.0	84.5	39.0	84.4	39.9	84.2	40.7	84.2	41.2	81.4	39.5	75.8	36.3
		-18.8	-19.0	86.1	39.3	86.0	40.2	85.8	41.0	84.2	40.3	81.4	38.7	75.8	35.5
		-16.7	-17.0	89.6	39.9	89.4	40.7	87.0	39.9	84.2	38.4	81.4	36.8	75.8	33.9
		-13.7	-15.0	93.4	40.5	92.6	40.9	87.0	37.9	84.2	36.4	81.4	35.0	75.8	32.2
		-11.8	-13.0	97.6	41.1	92.6	38.7	87.0	35.9	84.2	34.5	81.4	33.2	75.8	30.6
		-9.8	-11.0	98.2	39.2	92.6	36.6	87.0	34.0	84.2	32.7	81.4	31.4	75.8	29.0
		-9.5	-10.0	98.2	38.1	92.6	35.5	87.0	33.0	84.2	31.8	81.4	30.6	75.8	28.2
		-8.5	-9.1	98.2	37.1	92.6	34.6	87.0	32.2	84.2	31.0	81.4	29.8	75.8	27.5
		-7.0	-7.6	98.2	35.5	92.6	33.1	87.0	30.8	84.2	29.7	81.4	28.6	75.8	26.4
		-5.0	-5.6	98.2	33.4	92.6	31.2	87.0	29.1	84.2	28.0	81.4	27.0	75.8	25.0
		-3.0	-3.7	98.2	31.6	92.6	29.5	87.0	27.5	84.2	26.6	81.4	25.6	75.8	23.7
		0.0	-0.7	98.2	28.9	92.6	27.1	87.0	25.3	84.2	24.4	81.4	23.5	75.8	21.8
		3.0	2.2	98.2	26.5	92.6	24.9	87.0	23.3	84.2	22.5	81.4	21.7	75.8	20.1
		5.0	4.1	98.2	25.1	92.6	23.6	87.0	22.1	84.2	21.3	81.4	20.6	75.8	19.1
		7.0	6.0	98.2	23.8	92.6	22.4	87.0	20.9	84.2	20.2	81.4	19.5	75.8	18.2
		9.0	7.9	98.2	22.6	92.6	21.2	87.0	19.9	84.2	19.2	81.4	18.6	75.8	17.3
		11.0	9.8	98.2	21.4	92.6	20.2	87.0	18.9	84.2	18.3	81.4	17.7	75.8	16.5
		13.0	11.8	98.2	20.3	92.6	19.1	87.0	18.0	84.2	17.4	81.4	16.8	75.8	15.7
		15.0	13.7	98.2	19.3	92.6	18.2	87.0	17.1	84.2	16.6	81.4	16.0	75.8	15.0
50%	575 (65.00)	-19.8	-20.0	81.8	39.8	77.2	37.1	72.5	34.4	70.2	33.1	67.8	31.9	63.2	29.4
		-18.8	-19.0	81.8	38.9	77.2	36.2	72.5	33.7	70.2	32.4	67.8	31.2	63.2	28.7
		-16.7	-17.0	81.8	37.1	77.2	34.6	72.5	32.1	70.2	31.0	67.8	29.8	63.2	27.5
		-13.7	-15.0	81.8	35.2	77.2	32.9	72.5	30.6	70.2	29.5	67.8	28.4	63.2	26.2
		-11.8	-13.0	81.8	33.4	77.2	31.2	72.5	29.1	70.2	28.0	67.8	27.0	63.2	24.9
		-9.8	-11.0	81.8	31.6	77.2	29.6	72.5	27.6	70.2	26.6	67.8	25.6	63.2	23.7
		-9.5	-10.0	81.8	30.8	77.2	28.8	72.5	26.8	70.2	25.9	67.8	24.9	63.2	23.1
		-8.5	-9.1	81.8	30.0	77.2	28.1	72.5	26.2	70.2	25.2	67.8	24.3	63.2	22.5
		-7.0	-7.6	81.8	28.7	77.2	26.9	72.5	25.1	70.2	24.2	67.8	23.4	63.2	21.7
		-5.0	-5.6	81.8	27.2	77.2	25.4	72.5	23.8	70.2	23.0	67.8	22.1	63.2	20.5
		-3.0	-3.7	81.8	25.7	77.2	24.1	72.5	22.6	70.2	21.8	67.8	21.0	63.2	19.5
		0.0	-0.7	81.8	23.6	77.2	22.2	72.5	20.8	70.2	20.1	67.8	19.4	63.2	18.1
		3.0	2.2	81.8	21.8	77.2	20.5	72.5	19.2	70.2	18.6	67.8	18.0	63.2	16.7
		5.0	4.1	81.8	20.7	77.2	19.5	72.5	18.3	70.2	17.7	67.8	17.1	63.2	15.9
		7.0	6.0	81.8	19.6	77.2	18.5	72.5	17.4	70.2	16.8	67.8	16.3	63.2	15.2
		9.0	7.9	81.8	18.7	77.2	17.6	72.5	16.6	70.2	16.0	67.8	15.5	63.2	14.5
		11.0	9.8	81.8	17.8	77.2	16.8	72.5	15.8	70.2	15.3	67.8	14.8	63.2	13.9
		13.0	11.8	81.8	16.9	77.2	16.0	72.5	15.0	70.2	14.6	67.8	14.1	63.2	13.2
		15.0	13.7	81.8	16.1	77.2	15.2	72.5	14.4	70.2	13.9	67.8	13.5	63.2	12.7

4TW31482-2A

4 Capacity tables

4 - 3 Heating capacity tables

REYQ48P8

TC: Total Capacity: kW ; PI: Power Input: kW (compressor + outdoor fan motor)

Combination (%)	Capacity index (kW)	Outdoor air temp.		Indoor air temperature: °CDB											
				16.0		18.0		20.0		21.0		22.0		24.0	
				TC	PI	TC	PI	TC	PI	TC	PI	TC	PI	TC	PI
		°CDB	°CWB	kW	kW	kW	kW	kW	kW	kW	kW	kW	kW	kW	kW
130	1560 (175.50)	-19.8	-20.0	92.0	23.4	91.7	25.3	91.3	27.3	91.2	28.3	91.0	29.2	90.6	31.2
		-18.8	-19.0	93.7	24.1	93.3	26.0	93.0	27.9	92.8	28.8	92.6	29.8	92.3	31.7
		-16.7	-17.0	97.3	25.4	96.9	27.2	96.6	29.0	96.4	29.9	96.2	30.9	95.9	32.7
		-13.7	-15.0	101	26.7	101	28.5	101	30.2	100	31.1	100	32.0	99.9	33.7
		-11.8	-13.0	106	28.1	105	29.8	105	31.5	105	32.3	105	33.1	104	34.8
		-9.8	-11.0	111	29.5	110	31.1	110	32.7	110	33.5	110	34.3	109	35.9
		-9.5	-10.0	113	30.1	113	31.7	112	33.3	112	34.0	112	34.8	112	36.4
		-8.5	-9.1	115	30.7	115	32.3	115	33.8	115	34.6	114	35.3	114	36.8
		-7.0	-7.6	120	31.7	119	33.2	119	34.7	119	35.4	119	36.1	118	37.6
		-5.0	-5.6	126	33.0	125	34.4	125	35.8	125	36.5	125	37.2	124	38.6
		-3.0	-3.7	132	34.2	131	35.5	131	36.9	131	37.5	131	38.2	130	39.5
		0.0	-0.7	142	36.0	141	37.2	141	38.4	141	39.1	141	39.7	140	40.9
		3.0	2.2	153	37.6	152	38.7	152	39.9	152	40.4	152	41.0	151	42.1
		5.0	4.1	160	38.6	160	39.6	159	40.7	159	41.3	159	41.8	159	42.9
		7.0	6.0	168	39.5	168	40.5	167	41.6	167	42.1	167	42.6	167	43.6
		9.0	7.9	176	40.4	176	41.4	176	42.3	175	42.8	175	43.3	170	42.4
		11.0	9.8	185	41.2	184	42.2	184	43.1	184	43.6	182	43.5	170	39.9
		13.0	11.8	194	42.1	194	42.9	194	43.8	189	42.6	182	40.9	170	37.6
		15.0	13.7	204	42.8	203	43.7	195	41.8	189	40.2	182	38.6	170	35.5
120	1440 (162.00)	-19.8	-20.0	91.5	26.0	91.2	27.8	90.9	29.6	90.8	30.5	90.6	31.4	90.3	33.2
		-18.8	-19.0	93.2	26.6	92.9	28.4	92.6	30.1	92.4	31.0	92.3	31.9	91.9	33.6
		-16.7	-17.0	96.8	27.8	96.5	29.5	96.2	31.2	96.0	32.1	95.9	32.9	95.5	34.6
		-13.7	-15.0	101	29.1	101	30.7	100	32.3	100	33.1	99.9	33.9	99.6	35.6
		-11.8	-13.0	105	30.4	105	31.9	105	33.5	104	34.2	104	35.0	104	36.5
		-9.8	-11.0	110	31.6	110	33.1	109	34.6	109	35.3	109	36.0	109	37.5
		-9.5	-10.0	113	32.3	112	33.7	112	35.1	112	35.8	112	36.6	111	38.0
		-8.5	-9.1	115	32.8	115	34.2	114	35.6	114	36.3	114	37.0	114	38.4
		-7.0	-7.6	119	33.7	119	35.1	119	36.4	118	37.1	118	37.8	118	39.1
		-5.0	-5.6	125	34.9	125	36.2	124	37.5	124	38.1	124	38.8	124	40.1
		-3.0	-3.7	131	36.0	131	37.2	131	38.5	130	39.1	130	39.7	130	40.9
		0.0	-0.7	141	37.6	141	38.8	141	39.9	141	40.5	140	41.0	140	42.2
		3.0	2.2	152	39.1	152	40.2	151	41.2	151	41.7	151	42.3	151	43.3
		5.0	4.1	160	40.0	159	41.0	159	42.0	159	42.5	159	43.0	157	43.4
		7.0	6.0	168	40.9	167	41.8	167	42.8	167	43.3	167	43.7	157	40.8
		9.0	7.9	176	41.7	175	42.6	175	43.5	174	43.7	168	41.9	157	38.5
		11.0	9.8	184	42.5	184	43.4	180	42.8	174	41.1	168	39.5	157	36.3
		13.0	11.8	194	43.3	192	43.4	180	40.2	174	38.7	168	37.2	157	34.2
		15.0	13.7	203	43.9	192	40.9	180	38.0	174	36.5	168	35.1	157	32.3
110	1320 (148.50)	-19.8	-20.0	91.1	28.6	90.8	30.3	90.5	31.9	90.4	32.7	90.2	33.6	89.9	35.2
		-18.8	-19.0	92.7	29.2	92.4	30.8	92.2	32.4	92.0	33.2	91.9	34.0	91.6	35.6
		-16.7	-17.0	96.3	30.3	96.1	31.9	95.8	33.4	95.6	34.2	95.5	35.0	95.2	36.5
		-13.7	-15.0	100	31.5	100	32.9	99.8	34.4	99.6	35.2	99.5	35.9	99.2	37.4
		-11.8	-13.0	105	32.6	104	34.0	104	35.5	104	36.2	104	36.9	104	38.3
		-9.8	-11.0	110	33.8	109	35.1	109	36.5	109	37.2	109	37.8	108	39.2
		-9.5	-10.0	112	34.4	112	35.7	112	37.0	111	37.7	111	38.3	111	39.6
		-8.5	-9.1	115	34.9	114	36.2	114	37.4	114	38.1	114	38.7	113	40.0
		-7.0	-7.6	119	35.7	118	36.9	118	38.2	118	38.8	118	39.4	118	40.7
		-5.0	-5.6	125	36.8	124	38.0	124	39.2	124	39.8	124	40.3	124	41.5
		-3.0	-3.7	131	37.8	130	38.9	130	40.0	130	40.6	130	41.2	130	42.3
		0.0	-0.7	141	39.3	141	40.3	140	41.4	140	41.9	140	42.4	140	43.5
		3.0	2.2	152	40.7	151	41.6	151	42.6	151	43.1	151	43.6	144	41.5
		5.0	4.1	159	41.5	159	42.4	159	43.3	158	43.8	154	42.5	144	39.0
		7.0	6.0	167	42.3	167	43.2	165	43.4	160	41.7	154	40.1	144	36.8
		9.0	7.9	175	43.0	175	43.9	165	40.9	160	39.3	154	37.8	144	34.7
		11.0	9.8	184	43.8	176	41.5	165	38.5	160	37.1	154	35.6	144	32.8
		13.0	11.8	186	41.9	176	39.1	165	36.3	160	34.9	154	33.6	144	30.9
		15.0	13.7	186	39.5	176	36.9	165	34.3	160	33.0	154	31.7	144	29.3
100	1200 (135.00)	-19.8	-20.0	90.6	31.3	90.4	32.8	90.1	34.2	90.0	35.0	89.8	35.7	89.6	37.2
		-18.8	-19.0	92.3	31.8	92.0	33.2	91.7	34.7	91.6	35.4	91.5	36.1	91.2	37.6
		-16.7	-17.0	95.9	32.8	95.6	34.2	95.4	35.6	95.2	36.3	95.1	37.0	94.8	38.4
		-13.7	-15.0	99.9	33.8	99.6	35.2	99.4	36.5	99.2	37.2	99.1	37.9	98.8	39.2
		-11.8	-13.0	104	34.9	104	36.2	104	37.5	104	38.1	104	38.7	103	40.0
		-9.8	-11.0	109	35.9	109	37.2	109	38.4	108	39.0	108	39.6	108	40.9
		-9.5	-10.0	112	36.5	111	37.7	111	38.9	111	39.5	111	40.1	111	41.3
		-8.5	-9.1	114	36.9	114	38.1	114	39.3	113	39.9	113	40.4	113	41.6
		-7.0	-7.6	118	37.7	118	38.8	118	40.0	118	40.5	117	41.1	117	42.2
		-5.0	-5.6	124	38.7	124	39.8	124	40.8	124	41.4	123	41.9	123	43.0
		-3.0	-3.7	130	39.6	130	40.6	130	41.6	130	42.2	129	42.7	129	43.7
		0.0	-0.7	140	41.0	140	41.9	140	42.9	140	43.3	140	43.8	131	40.5
		3.0	2.2	151	42.2	151	43.1	150	43.6	145	41.9	140	40.3	131	37.0
		5.0	4.1	159	43.0	158	43.8	150	41.1	145	39.5	140	37.9	131	34.9
		7.0	6.0	167	43.7	160	41.7	150	38.7	145	37.2	140	35.8	131	32.9
		9.0	7.9	169	42.2	160	39.3	150	36.5	145	35.1	140	33.8	131	31.1
		11.0	9.8	169	39.7	160	37.1	150	34.4	145	33.2	140	31.9	131	29.4
		13.0	11.8	169	37.4	160	34.9	150	32.5	145	31.3	140	30.1	131	27.8
		15.0	13.7	169	35.3	160	33.0	150	30.7	145	29.6	140	28.5	131	26.3

4TW31482-2A

NOTES - ANMERKUNGEN - Σημειώσεις - NOTAS - REMARQUES - NOTE - OPMERKINGEN - примечания - NOTLAR

1 is shown as reference. When selecting the unit models, avoid the Outdoor air temperature range shown by .

dient als Verweis. Vermeiden Sie bei der Auswahl der Gerätemodelle den als markierten Temperaturbereich der Außenluft

Η είναι ενδεικτική. κατά την επιλογή των μοντέλων των μονάδων, αποφύγετε το εύρος θερμοκρασίας εξωτερικού αέρα που υποδεικνύεται

se muestra como referencia. Cuando seleccione los modelos de unidad, evite el intervalo de temperaturas del aire exterior indicado mediante

est montré comme référence.Lors du choix des modèles d'unités, évitez la plage de températures de l'air extérieur illustré par

valori riportati unicamente come riferimento. Nel selezionare i modelli delle unità, non considerare i valori di temperatura dell'aria esterna indicati con il colore

is als referentie getoond. Wanneer modellen van eenheden worden gekozen, vermijd dan het bereik van buitenluchttemperaturen geïllustreerd door

показан как. При выборе модели устройства избегайте внешнюю температуру воздуха, указанную в

referans olarak gösterilmektedir. Ünite modellerini seçerken, belirtilen Dış hava sıcaklığı aralığından kaçının

2 The above table shows the average value of conditions which may occur.

Die obige Tabelle zeigt den Durchschnittswert der Bedingungen, die auftreten können.

Στον παραπάνω πίνακα αναγράφεται η μέση τιμή για συνθήκες που μπορεί να προκύψουν.

La tabla de arriba muestra el valor medio de condiciones que pueden ocurrir.

Le tableau ci-dessus donne la valeur moyenne pour des conditions qui peuvent survenir.

La tabella in alto mostra il valore delle condizioni medie che si possono riscontrare.

De tabel hierboven geeft de gemiddelde waarde aan van situaties die kunnen voorvallen.

Таблица расположенная выше показывает среднее значение условий, которые могут наступить.

Yukarıdaki tablo meydana gelebilecek koşulların ortalama değerini göstermektedir.

4 Capacity tables

4 - 3 Heating capacity tables

REYQ48P8

TC: Total Capacity: kW ; PI: Power Input: kW (compressor + outdoor fan motor)

Combination (%)	Capacity index (kW)	Outdoor air temp.		Indoor air temperature: °CDB											
				16.0		18.0		20.0		21.0		22.0		24.0	
				TC	PI	TC	PI	TC	PI	TC	PI	TC	PI	TC	PI
		°CDB	°CWB	kW	kW	kW	kW	kW	kW	kW	kW	kW	kW	kW	kW
90%	1080 (121.50)	-19.8	-20.0	90.2	33.9	89.9	35.2	89.7	36.6	89.6	37.2	89.4	37.9	89.2	39.2
		-18.8	-19.0	91.8	34.3	91.6	35.6	91.3	37.0	91.2	37.6	91.1	38.3	90.9	39.6
		-16.7	-17.0	95.4	35.3	95.2	36.5	94.9	37.8	94.8	38.4	94.7	39.0	94.5	40.3
		-13.7	-15.0	99.4	36.2	99.2	37.4	99.0	38.6	98.8	39.2	98.7	39.8	98.5	41.0
		-11.8	-13.0	104	37.1	104	38.3	103	39.5	103	40.0	103	40.6	103	41.8
		-9.8	-11.0	109	38.1	108	39.2	108	40.3	108	40.9	108	41.4	108	42.5
		-9.5	-10.0	111	38.6	111	39.6	111	40.7	111	41.3	111	41.8	110	42.9
		-8.5	-9.1	114	39.0	113	40.0	113	41.1	113	41.6	113	42.2	113	43.2
		-7.0	-7.6	118	39.7	118	40.7	117	41.7	117	42.2	117	42.7	117	43.7
		-5.0	-5.6	124	40.6	124	41.5	123	42.5	123	43.0	123	43.5	118	41.6
		-3.0	-3.7	130	41.4	130	42.3	129	43.2	129	43.7	126	42.7	118	39.2
		0.0	-0.7	140	42.6	140	43.5	135	42.1	131	40.5	126	38.9	118	35.7
		3.0	2.2	151	43.7	144	41.4	135	38.4	131	37.0	126	35.5	118	32.7
		5.0	4.1	152	41.9	144	39.0	135	36.2	131	34.9	126	33.5	118	30.9
		7.0	6.0	152	39.4	144	36.8	135	34.2	131	32.9	126	31.7	118	29.2
		9.0	7.9	152	37.2	144	34.7	135	32.3	131	31.1	126	29.9	118	27.6
		11.0	9.8	152	35.1	144	32.8	135	30.5	131	29.4	126	28.3	118	26.2
		13.0	11.8	152	33.0	144	30.9	135	28.8	131	27.8	126	26.8	118	24.8
		15.0	13.7	152	31.3	144	29.3	135	27.3	131	26.3	126	25.4	118	23.5
80%	960 (108.00)	-19.8	-20.0	89.7	36.5	89.5	37.7	89.3	38.9	89.2	39.5	89.1	40.1	88.9	41.3
		-18.8	-19.0	91.3	36.9	91.1	38.1	90.9	39.2	90.8	39.8	90.7	40.4	90.5	41.6
		-16.7	-17.0	95.0	37.7	94.7	38.8	94.5	40.0	94.4	40.5	94.3	41.1	94.1	42.2
		-13.7	-15.0	99.0	38.6	98.8	39.6	98.5	40.7	98.4	41.3	98.3	41.8	98.1	42.9
		-11.8	-13.0	103	39.4	103	40.4	103	41.5	103	42.0	103	42.5	103	43.5
		-9.8	-11.0	108	40.3	108	41.2	108	42.2	108	42.7	108	43.2	105	42.4
		-9.5	-10.0	111	40.7	111	41.6	110	42.6	110	43.1	110	43.5	105	41.2
		-8.5	-9.1	113	41.0	113	42.0	113	42.9	113	43.4	112	43.7	105	40.1
		-7.0	-7.6	117	41.7	117	42.6	117	43.5	116	43.5	112	41.8	105	38.3
		-5.0	-5.6	123	42.5	123	43.3	120	42.6	116	40.9	112	39.3	105	36.1
		-3.0	-3.7	129	43.2	128	43.3	120	40.1	116	38.6	112	37.1	105	34.1
		0.0	-0.7	135	42.3	128	39.4	120	36.6	116	35.2	112	33.8	105	31.2
		3.0	2.2	135	38.6	128	36.0	120	33.5	116	32.2	112	31.0	105	28.6
		5.0	4.1	135	36.4	128	33.9	120	31.6	116	30.4	112	29.3	105	27.1
		7.0	6.0	135	34.3	128	32.1	120	29.9	116	28.8	112	27.7	105	25.6
		9.0	7.9	135	32.4	128	30.3	120	28.2	116	27.2	112	26.2	105	24.3
		11.0	9.8	135	30.6	128	28.7	120	26.8	116	25.8	112	24.9	105	23.1
		13.0	11.8	135	28.9	128	27.1	120	25.3	116	24.4	112	23.5	105	21.8
		15.0	13.7	135	27.4	128	25.7	120	24.0	116	23.2	112	22.4	105	20.8
70%	840 (94.50)	-19.8	-20.0	89.2	39.1	89.0	40.2	88.9	41.2	88.8	41.7	88.7	42.2	88.5	43.3
		-18.8	-19.0	90.9	39.5	90.7	40.5	90.5	41.5	90.4	42.0	90.3	42.5	90.1	43.6
		-16.7	-17.0	94.5	40.2	94.3	41.2	94.1	42.2	94.0	42.6	93.9	43.1	91.5	42.5
		-13.7	-15.0	98.5	40.9	98.3	41.9	98.1	42.8	98.0	43.3	98.0	43.8	91.5	40.3
		-11.8	-13.0	103	41.7	103	42.6	103	43.5	102	43.4	98.3	41.6	91.5	38.2
		-9.8	-11.0	108	42.4	108	43.3	105	42.6	102	40.9	98.3	39.3	91.5	36.1
		-9.5	-10.0	110	42.8	110	43.6	105	41.4	102	39.8	98.3	38.2	91.5	35.1
		-8.5	-9.1	113	43.1	112	43.4	105	40.3	102	38.7	98.3	37.2	91.5	34.2
		-7.0	-7.6	117	43.6	112	41.5	105	38.5	102	37.1	98.3	35.6	91.5	32.8
		-5.0	-5.6	118	41.9	112	39.1	105	36.3	102	34.9	98.3	33.6	91.5	30.9
		-3.0	-3.7	118	39.5	112	36.9	105	34.3	102	33.0	98.3	31.7	91.5	29.3
		0.0	-0.7	118	36.0	112	33.6	105	31.3	102	30.2	98.3	29.0	91.5	26.8
		3.0	2.2	118	33.0	112	30.8	105	28.7	102	27.7	98.3	26.7	91.5	24.7
		5.0	4.1	118	31.1	112	29.1	105	27.2	102	26.2	98.3	25.3	91.5	23.4
		7.0	6.0	118	29.4	112	27.6	105	25.7	102	24.8	98.3	24.0	91.5	22.2
		9.0	7.9	118	27.9	112	26.1	105	24.4	102	23.6	98.3	22.7	91.5	21.1
		11.0	9.8	118	26.4	112	24.8	105	23.2	102	22.4	98.3	21.6	91.5	20.1
		13.0	11.8	118	24.9	112	23.4	105	21.9	102	21.2	98.3	20.5	91.5	19.0
		15.0	13.7	118	23.7	112	22.3	105	20.9	102	20.2	98.3	19.5	91.5	18.1
60%	720 (81.00)	-19.8	-20.0	88.8	41.7	88.6	42.6	88.5	43.5	87.1	43.0	84.2	41.3	78.4	37.9
		-18.8	-19.0	90.4	42.0	90.3	42.9	90.0	43.7	87.1	42.0	84.2	40.3	78.4	37.0
		-16.7	-17.0	94.0	42.7	93.9	43.5	90.0	41.6	87.1	40.0	84.2	38.4	78.4	35.3
		-13.7	-15.0	98.0	43.3	95.8	42.6	90.0	39.5	87.1	38.0	84.2	36.5	78.4	33.6
		-11.8	-13.0	102	43.3	95.8	40.3	90.0	37.5	87.1	36.0	84.2	34.6	78.4	31.9
		-9.8	-11.0	102	40.9	95.8	38.1	90.0	35.4	87.1	34.1	84.2	32.8	78.4	30.2
		-9.5	-10.0	102	39.7	95.8	37.1	90.0	34.4	87.1	33.2	84.2	31.9	78.4	29.4
		-8.5	-9.1	102	38.7	95.8	36.1	90.0	33.6	87.1	32.3	84.2	31.1	78.4	28.7
		-7.0	-7.6	102	37.0	95.8	34.6	90.0	32.2	87.1	31.0	84.2	29.8	78.4	27.5
		-5.0	-5.6	102	34.9	95.8	32.6	90.0	30.3	87.1	29.3	84.2	28.2	78.4	26.0
		-3.0	-3.7	102	33.0	95.8	30.8	90.0	28.7	87.1	27.7	84.2	26.7	78.4	24.7
		0.0	-0.7	102	30.1	95.8	28.2	90.0	26.3	87.1	25.4	84.2	24.5	78.4	22.7
		3.0	2.2	102	27.7	95.8	26.0	90.0	24.3	87.1	23.4	84.2	22.6	78.4	21.0
		5.0	4.1	102	26.2	95.8	24.6	90.0	23.0	87.1	22.2	84.2	21.5	78.4	19.9
		7.0	6.0	102	24.8	95.8	23.3	90.0	21.8	87.1	21.1	84.2	20.4	78.4	19.0
		9.0	7.9	102	23.6	95.8	22.1	90.0	20.7	87.1	20.1	84.2	19.4	78.4	18.1
		11.0	9.8	102	22.4	95.8	21.0	90.0	19.7	87.1	19.1	84.2	18.5	78.4	17.2
		13.0	11.8	102	21.2	95.8	19.9	90.0	18.7	87.1	18.1	84.2	17.5	78.4	16.4
		15.0	13.7	102	20.2	95.8	19.0	90.0	17.9	87.1	17.3	84.2	16.7	78.4	15.6
50%	600 (67.50)	-19.8	-20.0	84.6	41.5	79.8	38.7	75.0	35.9	72.6	34.6	70.2	33.2	65.4	30.6
		-18.8	-19.0	84.6	40.6	79.8	37.8	75.0	35.1	72.6	33.8	70.2	32.5	65.4	30.0
		-16.7	-17.0	84.6	38.7	79.8	36.1	75.0	33.5	72.6	32.3	70.2	31.1	65.4	28.7
		-13.7	-15.0	84.6	36.7	79.8	34.3	75.0	31.9	72.6	30.7	70.2	29.6	65.4	27.3
		-11.8	-13.0	84.6	34.8	79.8	32.5	75.0	30.3	72.6	29.2	70.2	28.1	65.4	26.0
		-9.8	-11.0	84.6	33.0	79.8	30.8	75.0	28.7	72.6	27.7	70.2	26.7	65.4	24.7
		-9.5	-10.0	84.6	32.1	79.8	30.0	75.0	28.0	72.6	27.0	70.2	26.0	65.4	24.1
		-8.5	-9.1	84.6	31.3	79.8	29.3	75.0	27.3	72.6	26.3	70.2	25.4	65.4	23.5
		-7.0	-7.6	84.6	30.0	79.8	28.1	75.0	26.2	72.6	25.3	70.2	24.4	65.4	22.6
		-5.0	-5.6	84.6	28.3	79.8	26.5	75.0	24.8	72.6	23.9	70.2	23.1	65.4	21.4
		-3.0	-3.7	84.6	26.8	79.8	25.2	75.0	23.5	72.6	22.7	70.2	21.9	65.4	20.4
		0.0	-0.7	84.6	24.6	79.8	23.1	75.0	21.7	72.6	21.0	70.2	20.2	65.4	18.8
		3.0	2.2	84.6	22.7	79.8	21.4	75.0	20.0	72.6	19.4	70.2	18.7	65.4	17.5
		5.0	4.1	84.6	21.6	79.8	20.3	75.0	19.1	72.6	18.4	70.2	17.8	65.4	16.6
		7.0	6.0	84.6	20.5	79.8	19.3	75.0	18.1	72.6	17.6	70.2	17.0	65.4	15.9
		9.0	7.9	84.6	19.5	79.8	18.4	75.0	17.3	72.6	16.7	70.2	16.2	65.4	15.1
		11.0	9.8	84.6	18.5	79.8	17.5	75.0	16.5	72.6	16.0	70.2	15.5	65.4	14.5
		13.0	11.8	84.6	17.6	79.8	16.6	75.0	15.7	72.6	15.2	70.2	14.7	65.4	13.8
		15.0	13.7	84.6	16.8	79.8	15.9	75.0	15.0	72.6	14.5	70.2	14.1	65.4	13.2

4TW31482-2A

5 Dimensional drawing & centre of gravity

5 - 1 Dimensional drawing

REYQ8,12P9

REYQ10,14,16P8

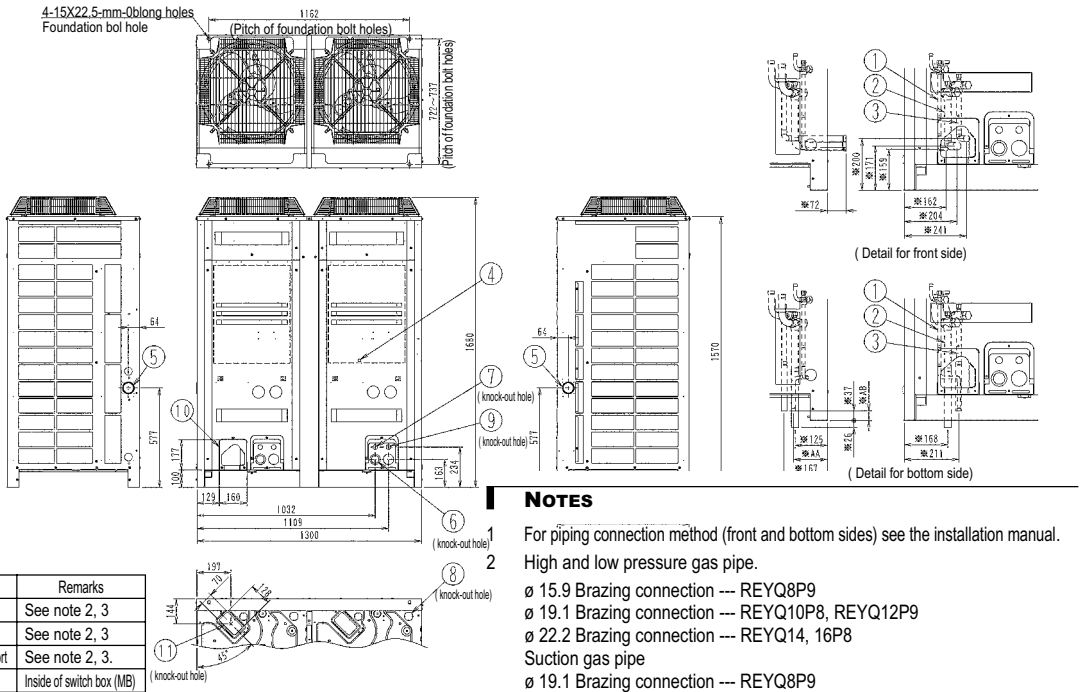

Nr	Parts name	Remarks
1	Liquid pipe connection port	See note 2, 3
2	Suction gas pipe connection	See note 2, 3
3	High and low pressure gas pipe connection port	See note 2, 3.
4	Grounding terminal	Inside of switch box (MB)
5	Power cord routing hole (side)	ø 62
6	Power cord routing hole (front)	ø 45
7	Power cord routing hole (front)	ø 27
8	Power cord routing hole (bottom)	ø 50
9	Pipe routing hole (front)	ø 27
10	Pipe routing hole (front)	See note 1.
11	Pipe routing hole (bottom)	See note 1.

	AA	AB
REYQ8 • 12P9 REYQ10P8	129	32
REYQ14 • 16P8	131	38

Notes

1 For piping connection method (front and bottom sides) see the installation manual.

2 High and low pressure gas pipe.
ø 15.9 Brazing connection --- REYQ8P9
ø 19.1 Brazing connection --- REYQ10P8, REYQ12P9
ø 22.2 Brazing connection --- REYQ14, 16P8
Suction gas pipe
ø 19.1 Brazing connection --- REYQ8P9
ø 22.2 Brazing connection --- REYQ10P8
ø 28.6 Brazing connection --- REYQ12P9, REYQ14, 16P8
Liquid pipe
ø 9.5 Brazing connection --- REYQ8P9, REYQ10P8
ø 12.7 Brazing connection --- REYQ12P9, REYQ14, 16P8

3 Piping connection diameter for field connection.

4 ❊ Shows the dimensions after fixing the accessory pipes.

3D057573E

REMQ8,12P9

REMQ10P8

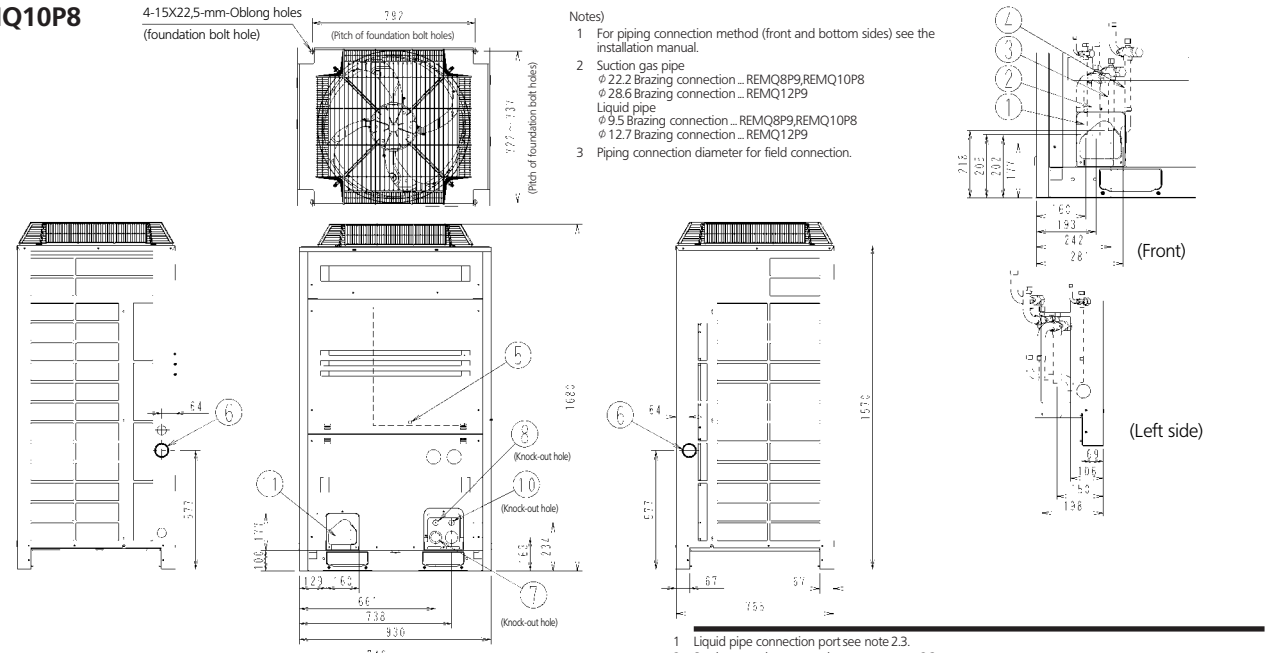

Notes)
1 For piping connection method (front and bottom sides) see the installation manual.
2 Suction gas pipe
φ 22.2 Brazing connection ... REMQ8P9,REMQ10P8
φ 28.6 Brazing connection ... REMQ12P9
Liquid pipe
φ 9.5 Brazing connection ... REMQ8P9,REMQ10P8
φ 12.7 Brazing connection ... REMQ12P9
3 Piping connection diameter for field connection.

1 Liquid pipe connection port see note 2.3.
2 Suction gas pipe connection port see note 2.3.
3 High and low pressure gas pipe connection port φ 19.1 Brazing connection see note 3.
4 Pressure equalizer pipe connection port φ 19.1 Brazing connection see note 3.
5 Grounding terminal inside of switch box (M8)
6 Power cord routing hole (side) φ 62
7 Power cord routing hole (front) φ 45
8 Power cord routing hole (front) φ 27
9 Power cord routing hole (bottom) φ 65.5
10 Wire routing hole (front) φ 27
11 Pipe routing hole (front) see note 1.
12 Pipe routing hole (bottom) see note 1.
13 Pipe routing hole (bottom) φ 50 see note 1.

3D057584B

5 Dimensional drawing & centre of gravity

5 - 1 Dimensional drawing

REMQ14,16P8

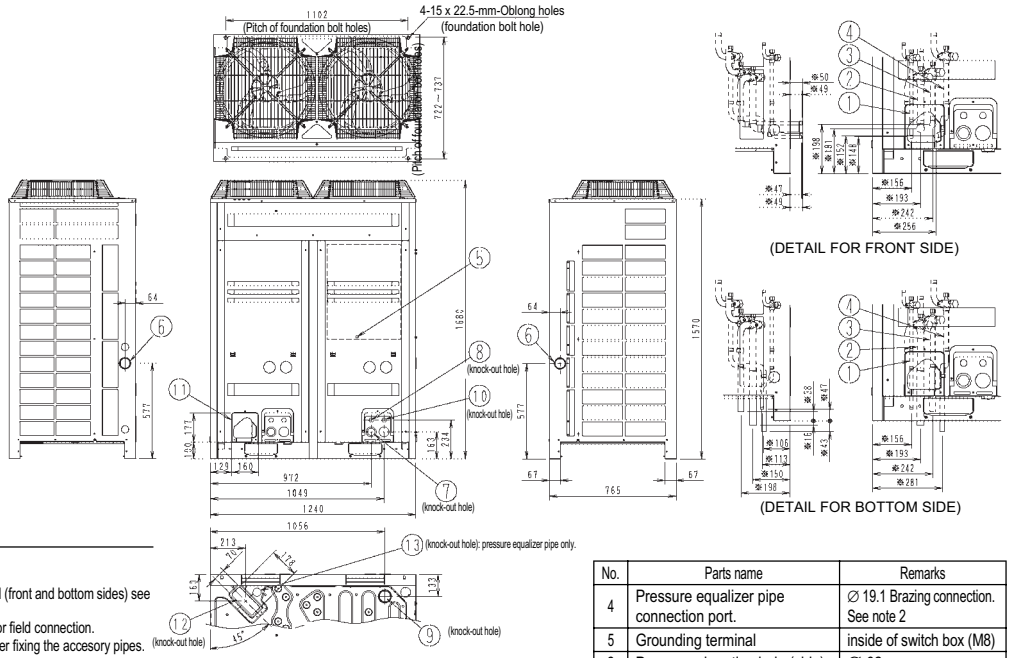

NOTES

1 For piping connection method (front and bottom sides) see the installation manual.
2 Piping connection diameter for field connection.
3 ※ shows the dimensions after fixing the accesory pipes.

No.	Parts name	Remarks
1	Liquid pipe connection port.	∅ 12.7 Brazing connection. See note 2
2	Suction gas pipe connection port.	∅ 28.6 Brazing connection. See note 2
3	High and low pressure gas pipe connection port	∅ 22.2 Brazing connection. See note 3

No.	Parts name	Remarks
4	Pressure equalizer pipe connection port.	∅ 19.1 Brazing connection. See note 2
5	Grounding terminal	inside of switch box (M8)
6	Power cord routing hole (side)	∅ 62
7	Power cord routing hole (front)	∅ 45
8	Power cord routing hole (front)	∅ 27
9	Power cord routing hole (bottom)	∅ 65.5
10	Wire routing hole (front)	∅ 27
11	Pipe routing hole (front)	See note 1.
12	Pipe routing hole (bottom)	See note 1.
13	Pipe routing hole (bottom)	∅ 50 See note 1.

3D057585A

REYQ18,20P9
REYQ22,24P8

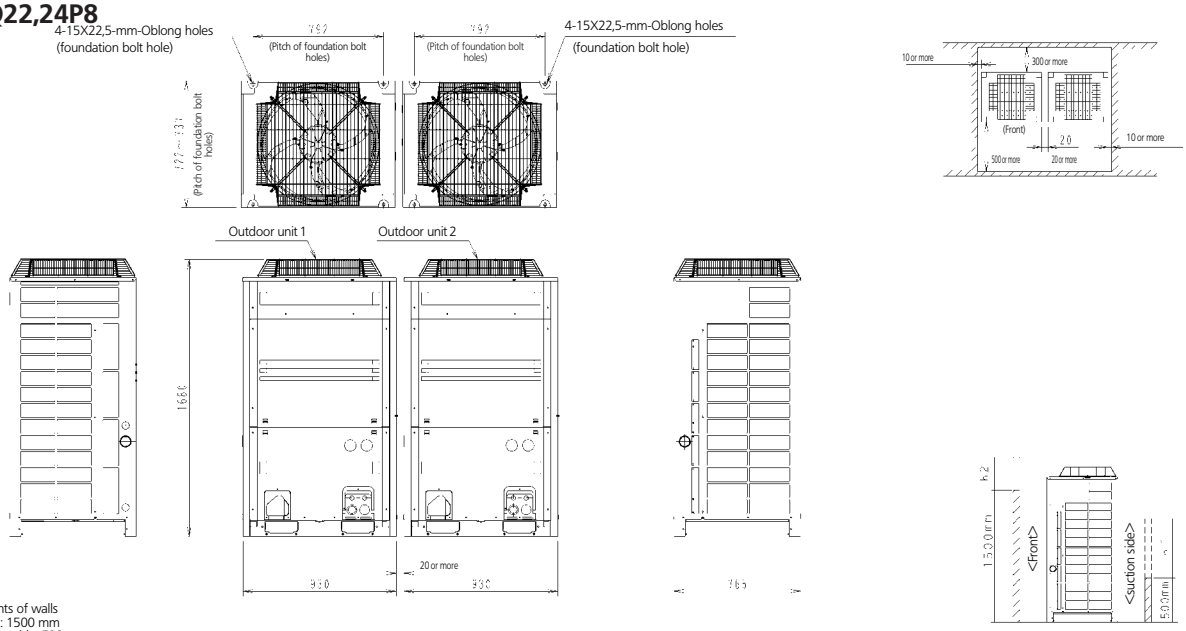

Notes:
1 Heights of walls
Front: 1500 mm
suction side: 500 mm
Side: Height unrestricted.
The installation space shown in this figure is based on the condition of cooling operation at the outdoor air temperature of 35°C.
The installation space of suction side shown above must be expanded in the following case.
- Design outdoor temperature becomes over 35°C.
- Operating over Max. operating load (In case of causing a heavy heating load at indoor unit side).
2 If the above wall heights are exceeded then h1/2 and h2/2 should be added to the front and suction side service spaces respectively as shown in the figure on the right.
3 When installing the units most appropriate pattern should be selected from those shown above in order to obtain the best fit in the space available always bearing in mind the need to leave enough space for a person to pass between units and wall and for the air to circulate freely.
(If more units are to be installed than are catered for in the above patterns your layout should take account of the possibility of short circuits.)
4 The units should be installed to leave sufficient space at the front for the on site refrigerant piping work to be carried out comfortably.

Model name	Outdoor unit 1	Outdoor unit 2
REYQ18P9	REMQ10P8	REMQ8P9
REYQ20P9	REMQ12P8	REMQ8P9
REYQ22P8	REMQ12P8	REMQ10P8
REYQ24P8	REMQ12P8	REMQ12P8

3D057885

5 Dimensional drawing & centre of gravity

5 - 1 Dimensional drawing

REYQ26,28P8

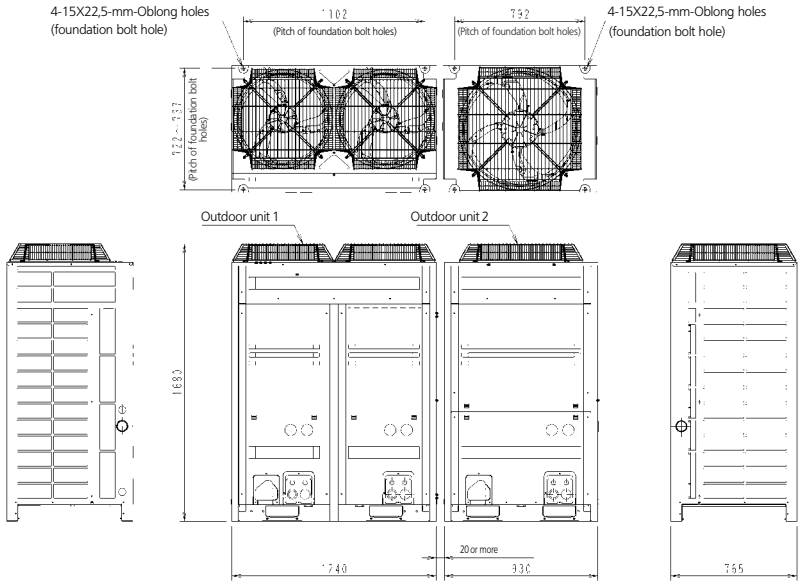

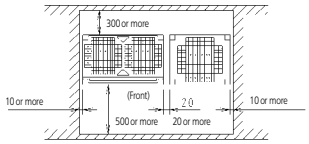

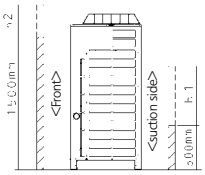

Notes:

1 Heights of walls
Front: 1500 mm
suction side: 500 mm
Side: Height unrestricted.
The installation space shown in this figure is based on the condition of cooling operation at the outdoor air temperature of 35°C.
The installation space of suction side shown above must be expanded in the following case.
- Design outdoor temperature becomes over 35°C.
- Operating over Max. operating load (In case of causing a heavy heating load at indoor unit side).

2 If the above wall heights are exceeded then h1/2 and h2/2 should be added to the front and suction side service spaces respectively as shown in the figure on the right.

3 When installing the units most appropriate pattern should be selected from those shown above in order to obtain the best fit in the space available always bearing in mind the need to leave enough space for a person to pass between units and wall and for the air to circulate freely.
(If more units are to be installed than are catered for in the above patterns your layout should take account of the possibility of short circuits.)

4 The units should be installed to leave sufficient space at the front for the on site refrigerant piping work to be carried out comfortably.

Model name	Outdoor unit 1	Outdoor unit 2
REYQ26P8	REMQ16P8	REMQ10P8
REYQ28P8	REMQ16P8	REMQ12P8

3D057886

REYQ30,32P8

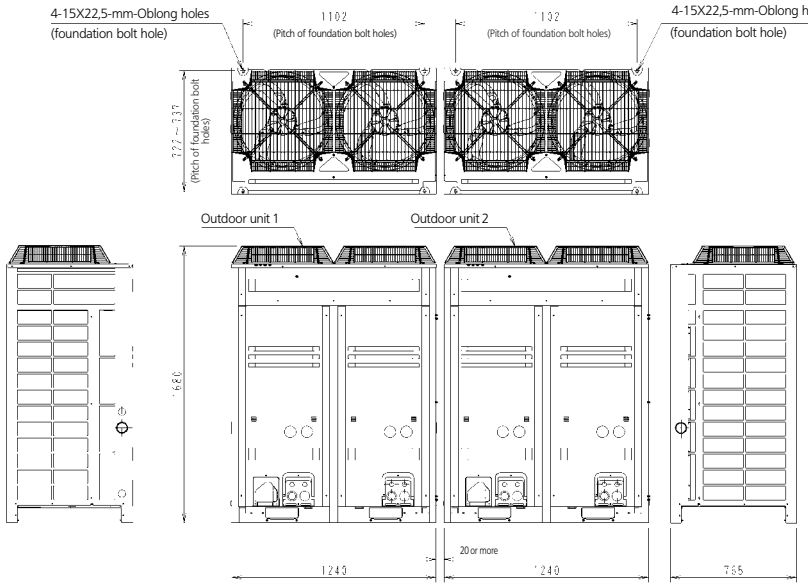

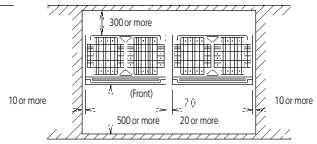

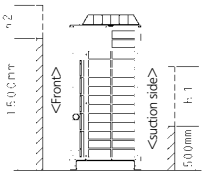

Notes:

1 Heights of walls
Front: 1500 mm
suction side: 500 mm
Side: Height unrestricted.
The installation space shown in this figure is based on the condition of cooling operation at the outdoor air temperature of 35°C.
The installation space of suction side shown above must be expanded in the following case.
- Design outdoor temperature becomes over 35°C.
- Operating over Max. operating load (In case of causing a heavy heating load at indoor unit side).

2 If the above wall heights are exceeded then h1/2 and h2/2 should be added to the front and suction side service spaces respectively as shown in the figure on the right.

3 When installing the units most appropriate pattern should be selected from those shown above in order to obtain the best fit in the space available always bearing in mind the need to leave enough space for a person to pass between units and wall and for the air to circulate freely.
(If more units are to be installed than are catered for in the above patterns your layout should take account of the possibility of short circuits.)

4 The units should be installed to leave sufficient space at the front for the on site refrigerant piping work to be carried out comfortably.

Model name	Outdoor unit 1	Outdoor unit 2
REYQ30P8	REMQ16P8	REMQ14P8
REYQ32P8	REMQ16P8	REMQ16P8

3D057887

5 Dimensional drawing & centre of gravity

5 - 1 Dimensional drawing

REYQ34,36P9
REYQ38,40P8

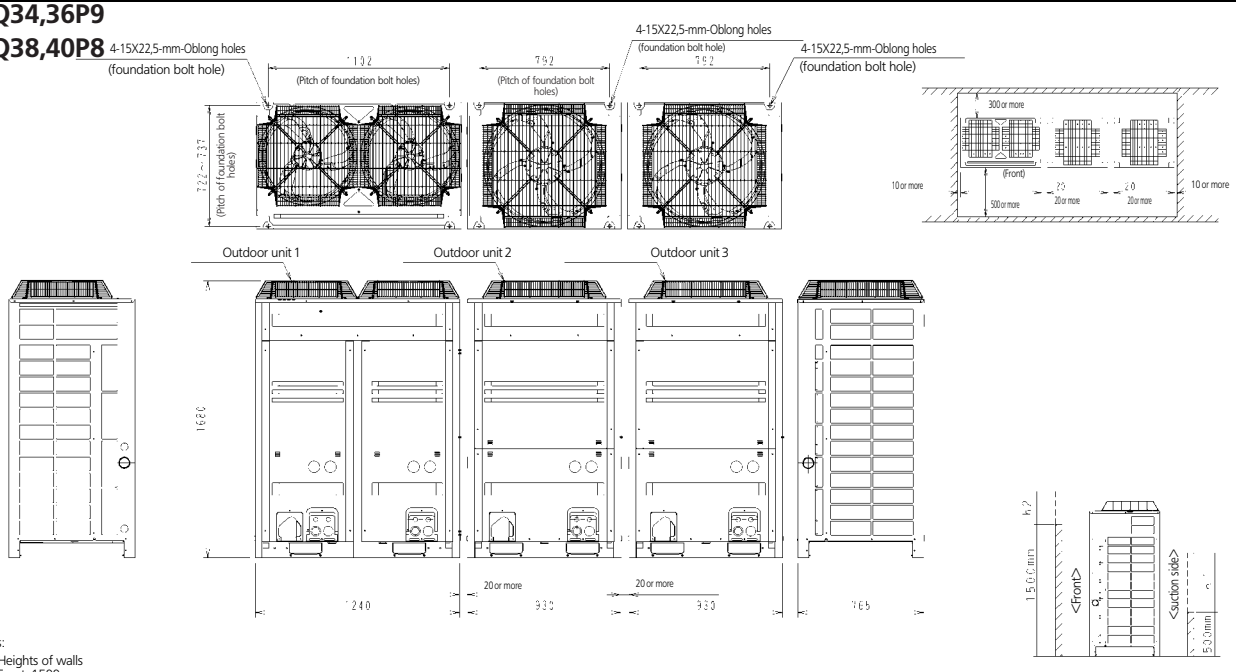

Notes:
1 Heights of walls
Front: 1500 mm
suction side: 500 mm
Side: Height unrestricted.
The installation space shown in this figure is based on the condition of cooling operation at the outdoor air temperature of 35°C.
The installation space of suction side shown above must be expanded in the following case.
- Design outdoor temperature becomes over 35°C.
- Operating over Max. operating load (In case of causing a heavy heating load at indoor unit side).
2 If the above wall heights are exceeded then h1/2 and h2/2 should be added to the front and suction side service spaces respectively as shown in the figure on the right.
3 When installing the units most appropriate pattern should be selected from those shown above in order to obtain the best fit in the space available always bearing in mind the need to leave enough space for a person to pass between units and wall and for the air to circulate freely.
(If more units are to be installed than are catered for in the above patterns your layout should take account of the possibility of short circuits.)
4 The units should be installed to leave sufficient space at the front for the on site refrigerant piping work to be carried out comfortably.

Model name	Outdoor unit 1	Outdoor unit 2	Outdoor unit 3
REYQ34P9	REMQ16P8	REMQ10P8	REMQ8P9
REYQ36P9	REMQ16P8	REMQ12P9	REMQ8P9
REYQ38P8	REMQ16P8	REMQ12P9	REMQ10P8
REYQ40P8	REMQ16P8	REMQ12P9	REMQ12P9

3D057888

REYQ42,44P8

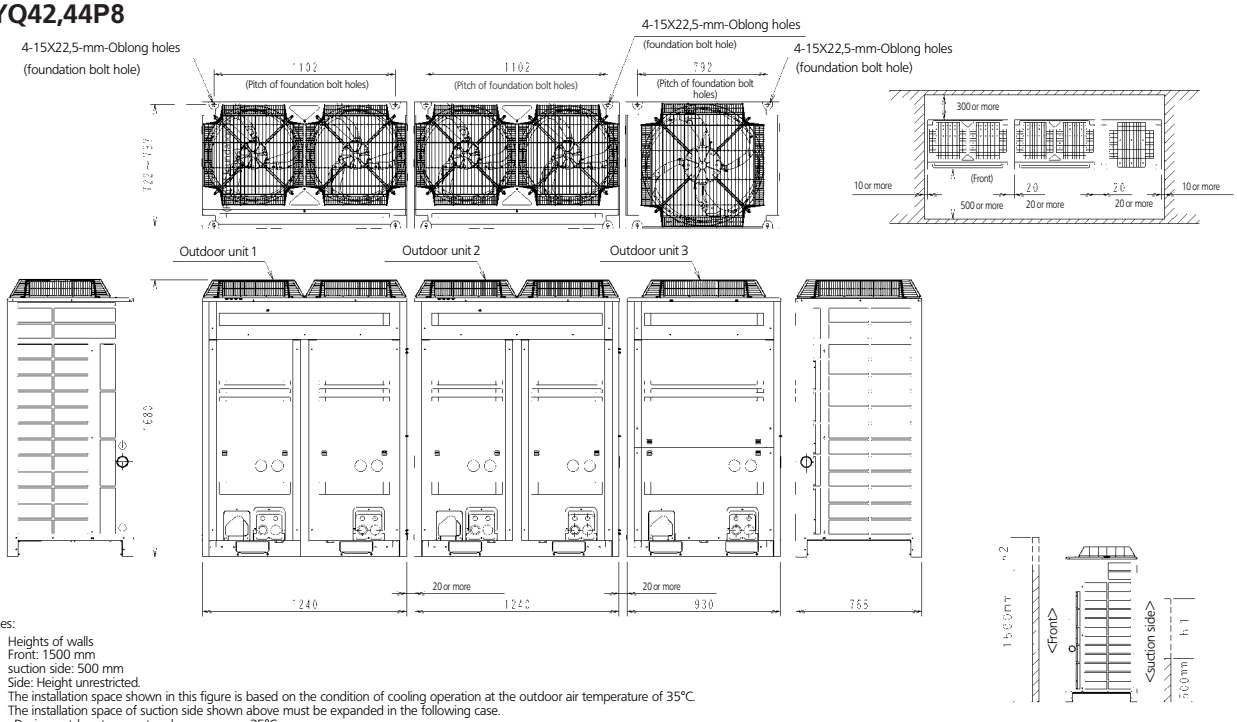

Notes:
1 Heights of walls
Front: 1500 mm
suction side: 500 mm
Side: Height unrestricted.
The installation space shown in this figure is based on the condition of cooling operation at the outdoor air temperature of 35°C.
The installation space of suction side shown above must be expanded in the following case.
- Design outdoor temperature becomes over 35°C.
- Operating over Max. operating load (In case of causing a heavy heating load at indoor unit side).
2 If the above wall heights are exceeded then h1/2 and h2/2 should be added to the front and suction side service spaces respectively as shown in the figure on the right.
3 When installing the units most appropriate pattern should be selected from those shown above in order to obtain the best fit in the space available always bearing in mind the need to leave enough space for a person to pass between units and wall and for the air to circulate freely.
(If more units are to be installed than are catered for in the above patterns your layout should take account of the possibility of short circuits.)
4 The units should be installed to leave sufficient space at the front for the on site refrigerant piping work to be carried out comfortably.

Model name	Outdoor unit 1	Outdoor unit 2	Outdoor unit 3
REYQ42P8	REMQ16P8	REMQ16P8	REMQ10P8
REYQ44P8	REMQ16P8	REMQ16P8	REMQ12P8

3D057889

5 Dimensional drawing & centre of gravity

5 - 1 Dimensional drawing

REYQ46,48P8

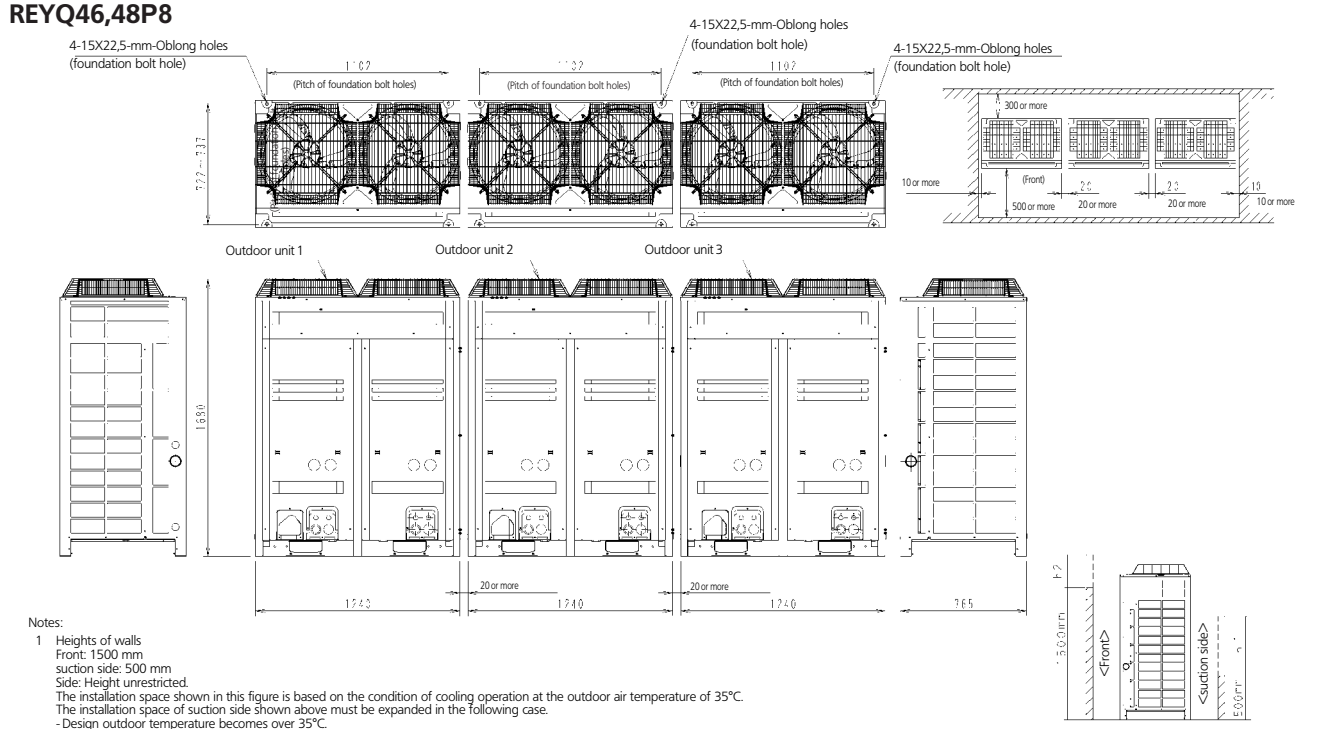

Notes:

1 Heights of walls
Front: 1500 mm
suction side: 500 mm
Side: Height unrestricted.
The installation space shown in this figure is based on the condition of cooling operation at the outdoor air temperature of 35°C.
The installation space of suction side shown above must be expanded in the following case.
- Design outdoor temperature becomes over 35°C.
- Operating over Max. operating load (In case of causing a heavy heating load at indoor unit side).

2 If the above wall heights are exceeded then h1/2 and h2/2 should be added to the front and suction side service spaces respectively as shown in the figure on the right.

3 When installing the units most appropriate pattern should be selected from those shown above in order to obtain the best fit in the space available always bearing in mind the need to leave enough space for a person to pass between units and wall and for the air to circulate freely. (If more units are to be installed than are catered for in the above patterns your layout should take account of the possibility of short circuits.)

4 The units should be installed to leave sufficient space at the front for the on site refrigerant piping work to be carried out comfortably.

Model name	Outdoor unit 1	Outdoor unit 2	Outdoor unit 3
REYQ46P8	REMQ16P8	REMQ16P8	REMQ14P8
REYQ48P8	REMQ16P8	REMQ16P8	REMQ16P8

3D057890

5 Dimensional drawing & centre of gravity

5 - 2 Dimensional drawing with accessories

REYQ8,12P9
REYQ10,14,16P8

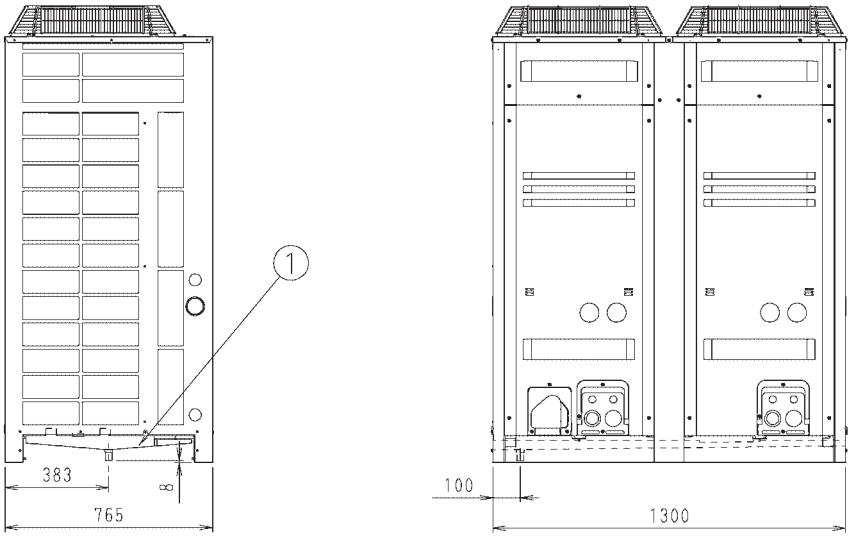

No.	Parts name	Remark
1	Central drain pan kit	KW25C450(E)

3D058372A

REMQ8P9, REMQ10,12P8

No.	Parts name	Remark
1	Central drain kit	KWC26C280(E)

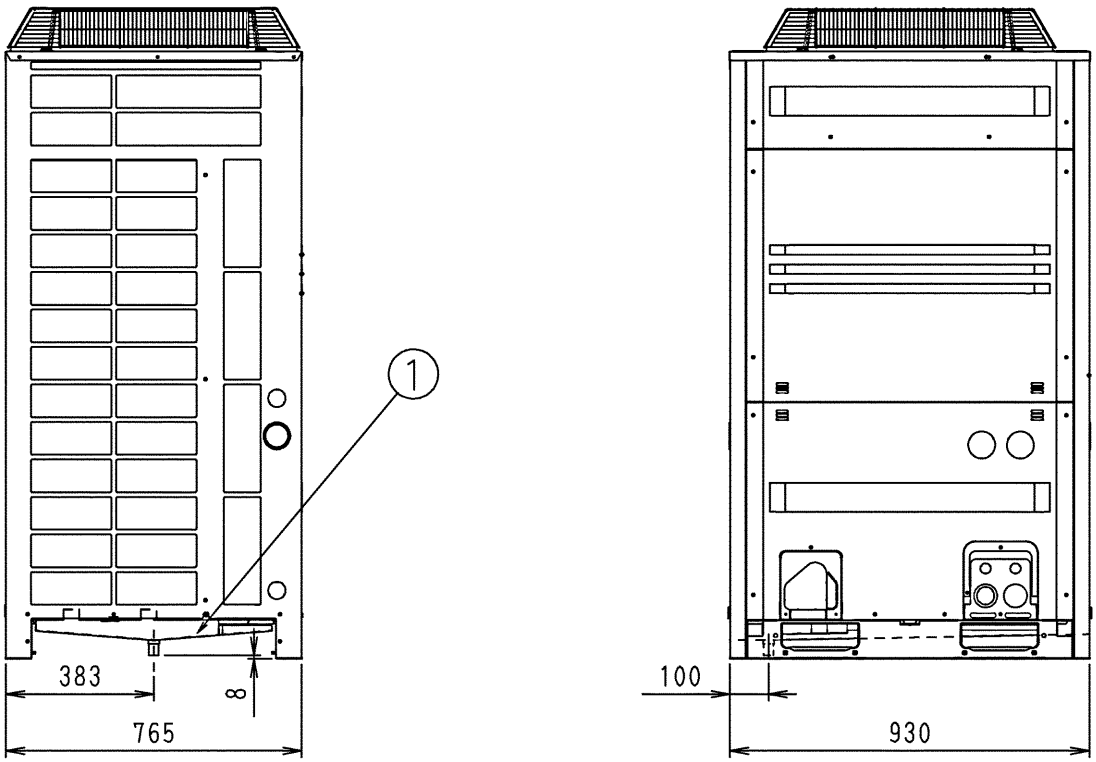

3D052254G

5 Dimensional drawing & centre of gravity

5 - 2 Dimensional drawing with accessories

REMQ14,16P8

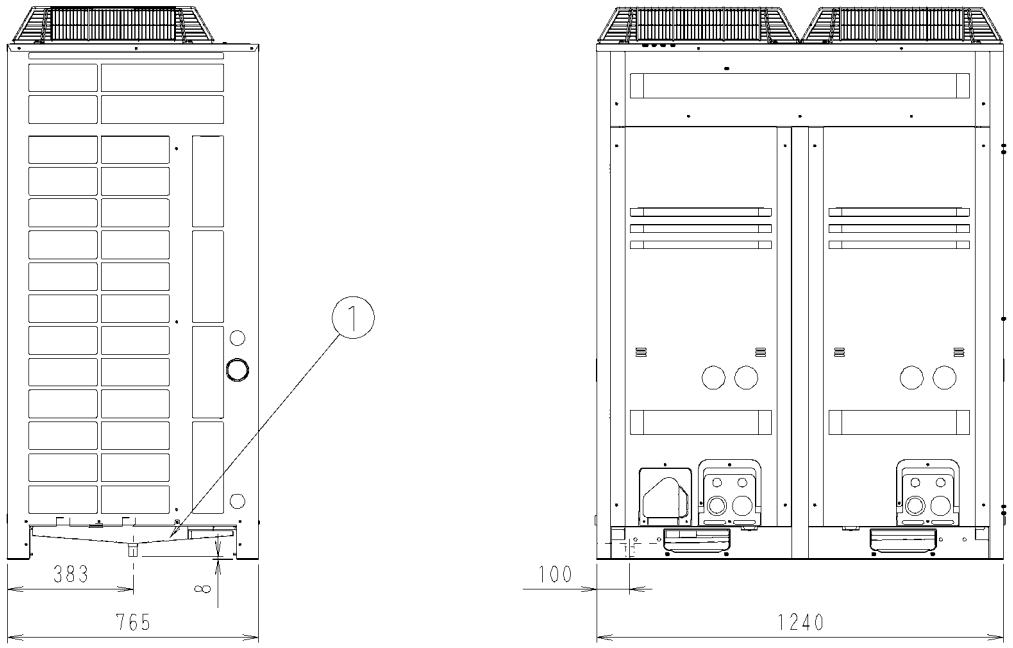

1 Central drain pan kit KWC26C450(E)

3D052255G

5 Dimensional drawing & centre of gravity

5 - 3 Centre of gravity

REYQ8,10,12P8

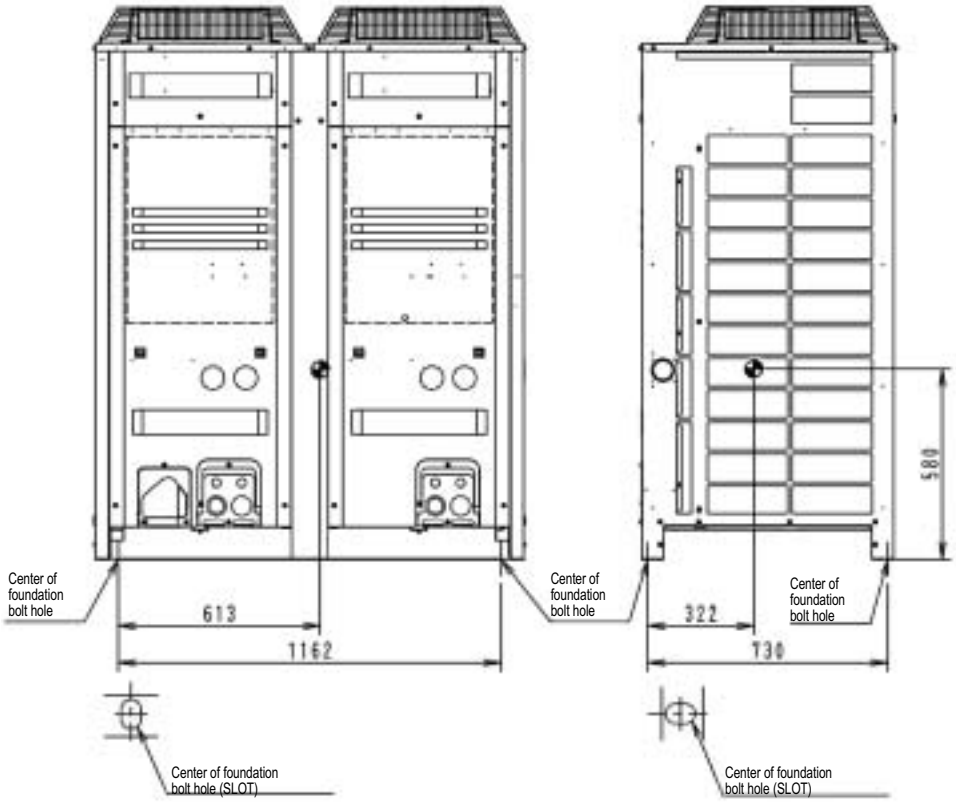

4D058152A

REYQ14,16P8

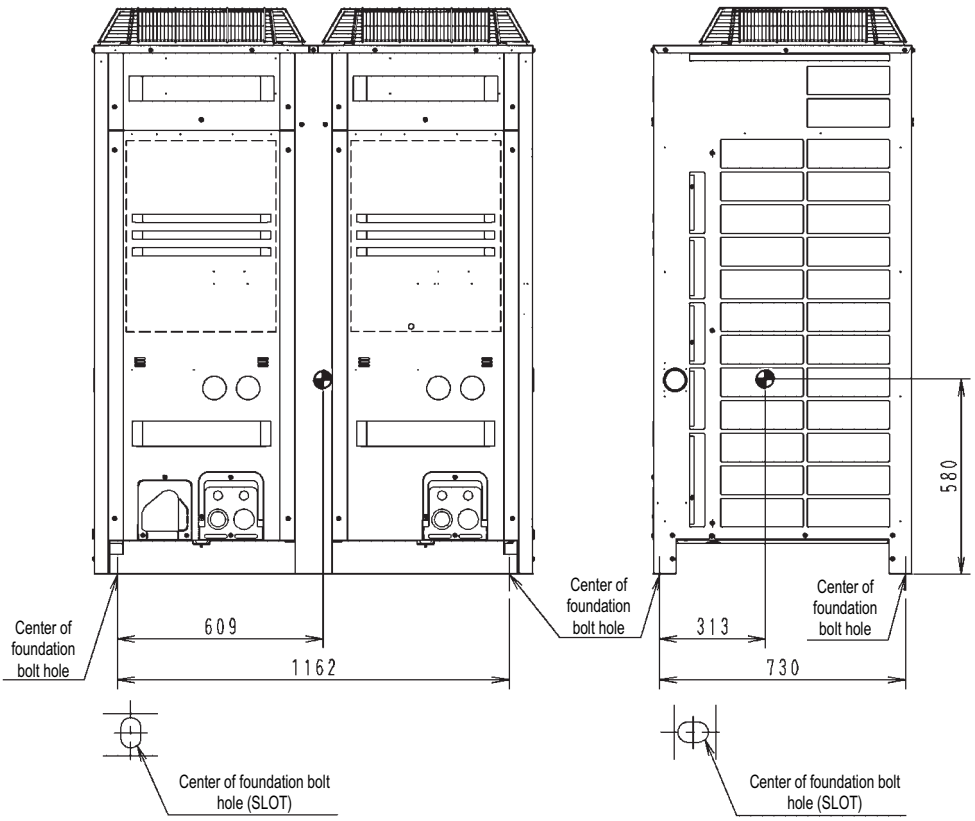

4D057739A

5 Dimensional drawing & centre of gravity

5 - 3 Centre of gravity

REMQ8P9

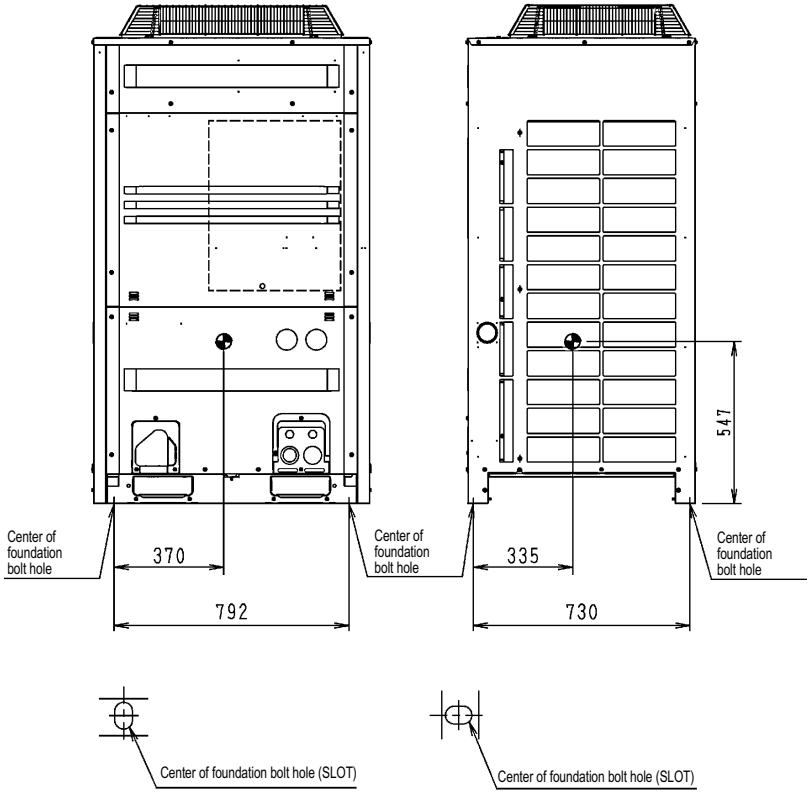

4D057576B

REMQ10,12P8

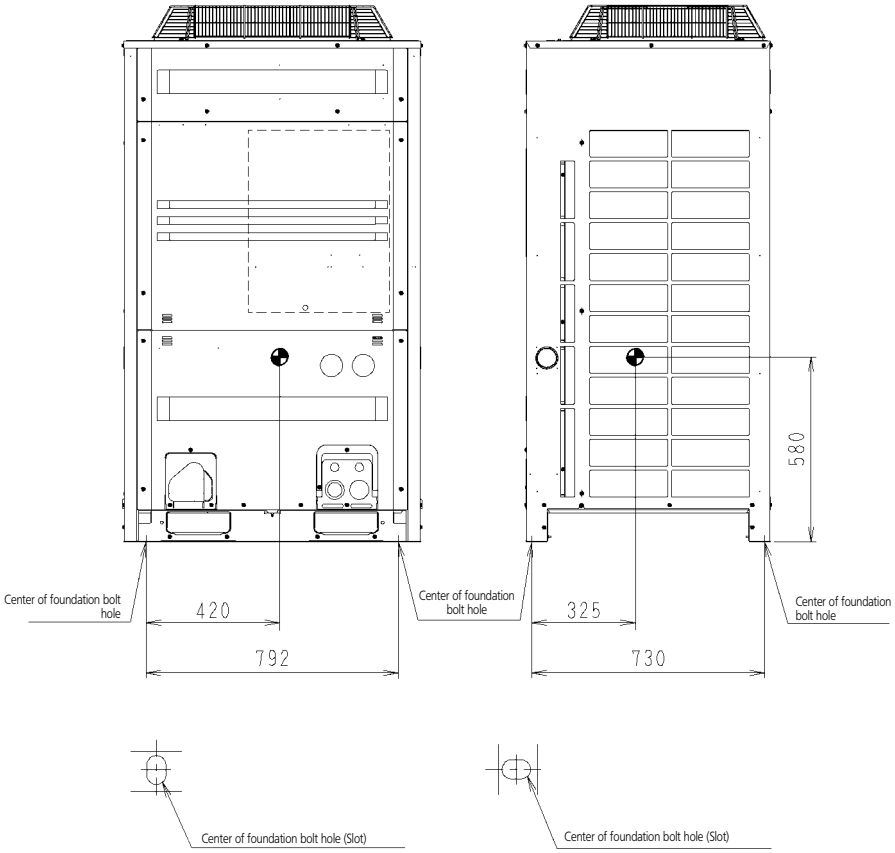

4D057577A

5 Dimensional drawing & centre of gravity

5 - 3 Centre of gravity

REMQ14,16P8

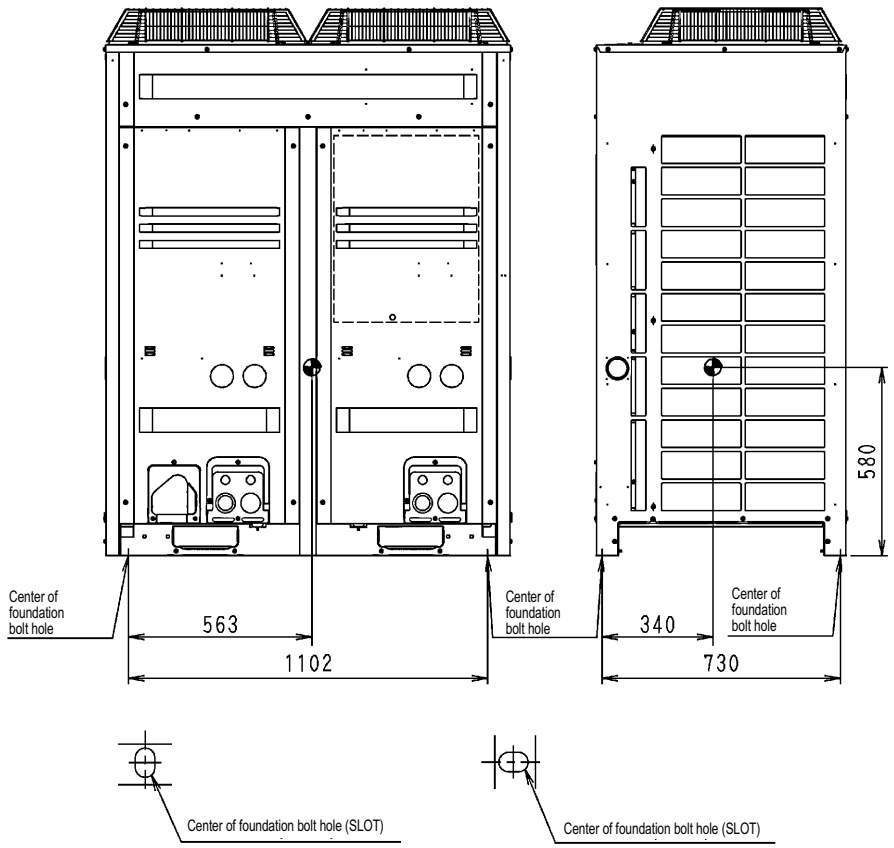

3D057578B

6 Piping diagram

REYQ8,12P9
REYQ10P8

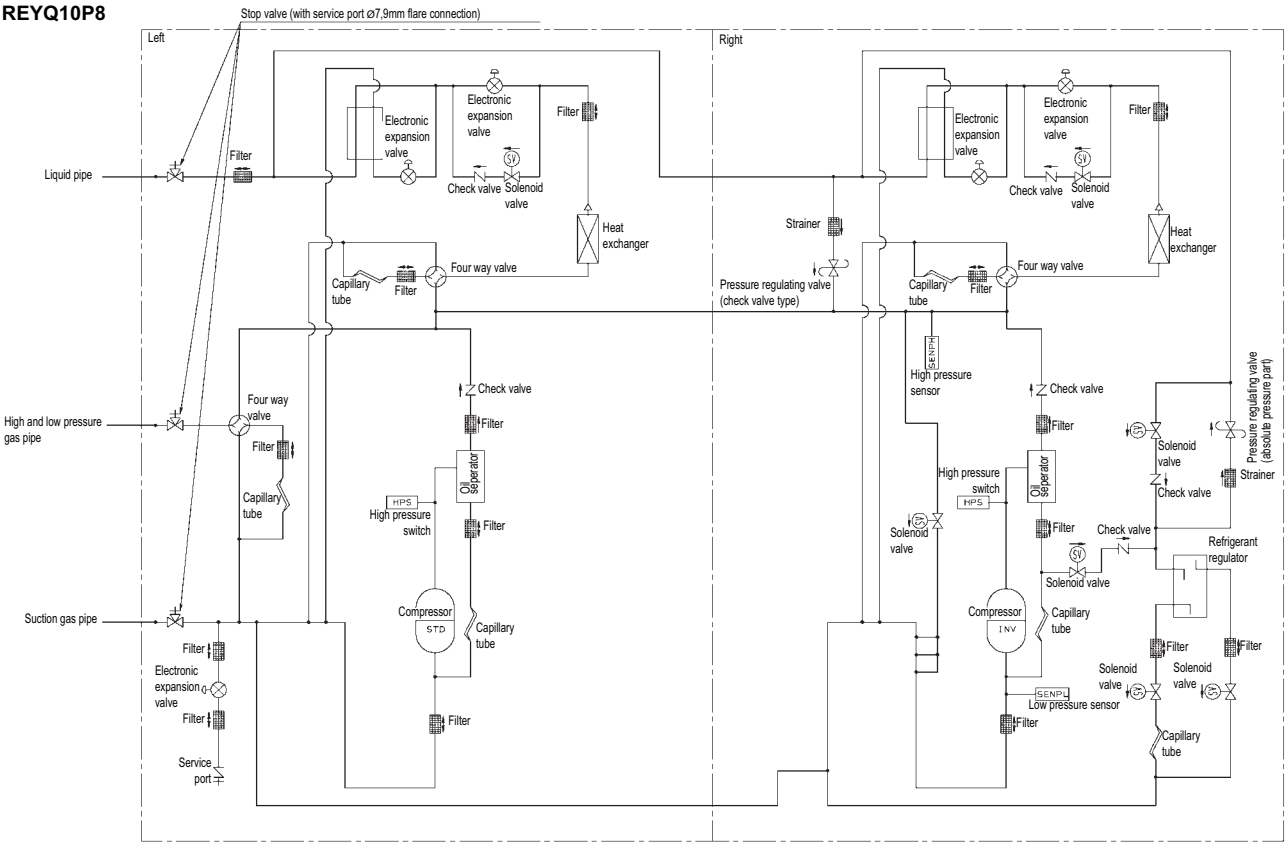

3D058154B

REYQ14,16P8

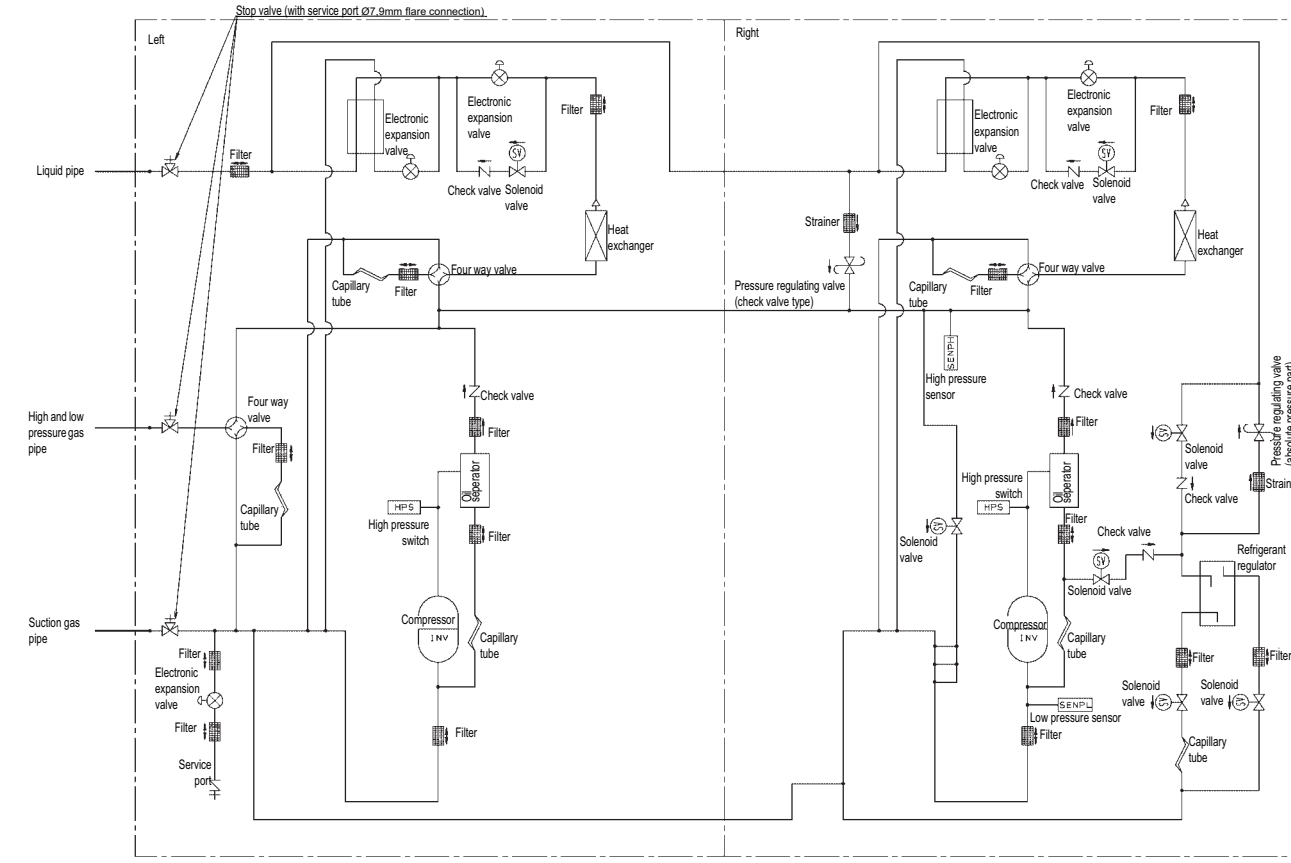

3D058153A

6 Piping diagram

REMQ8P9

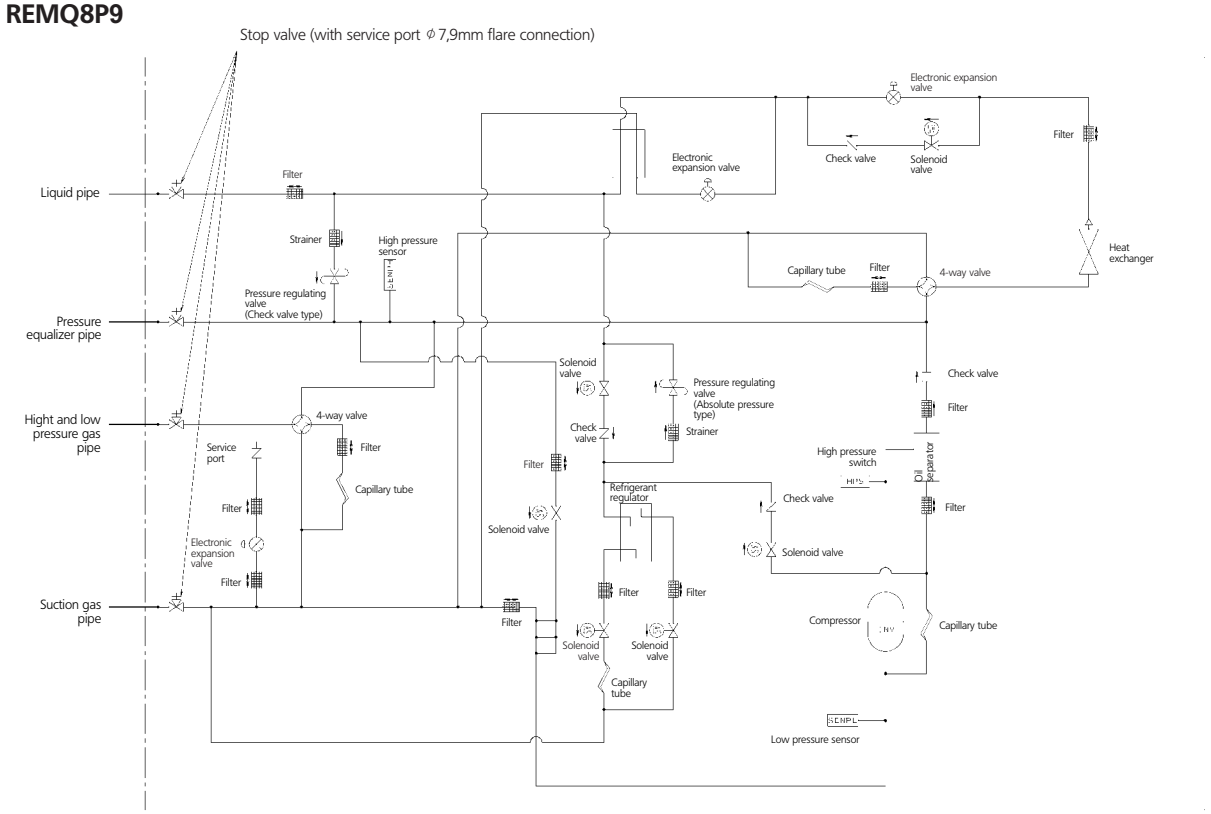

3D057743

REMQ10,12P8

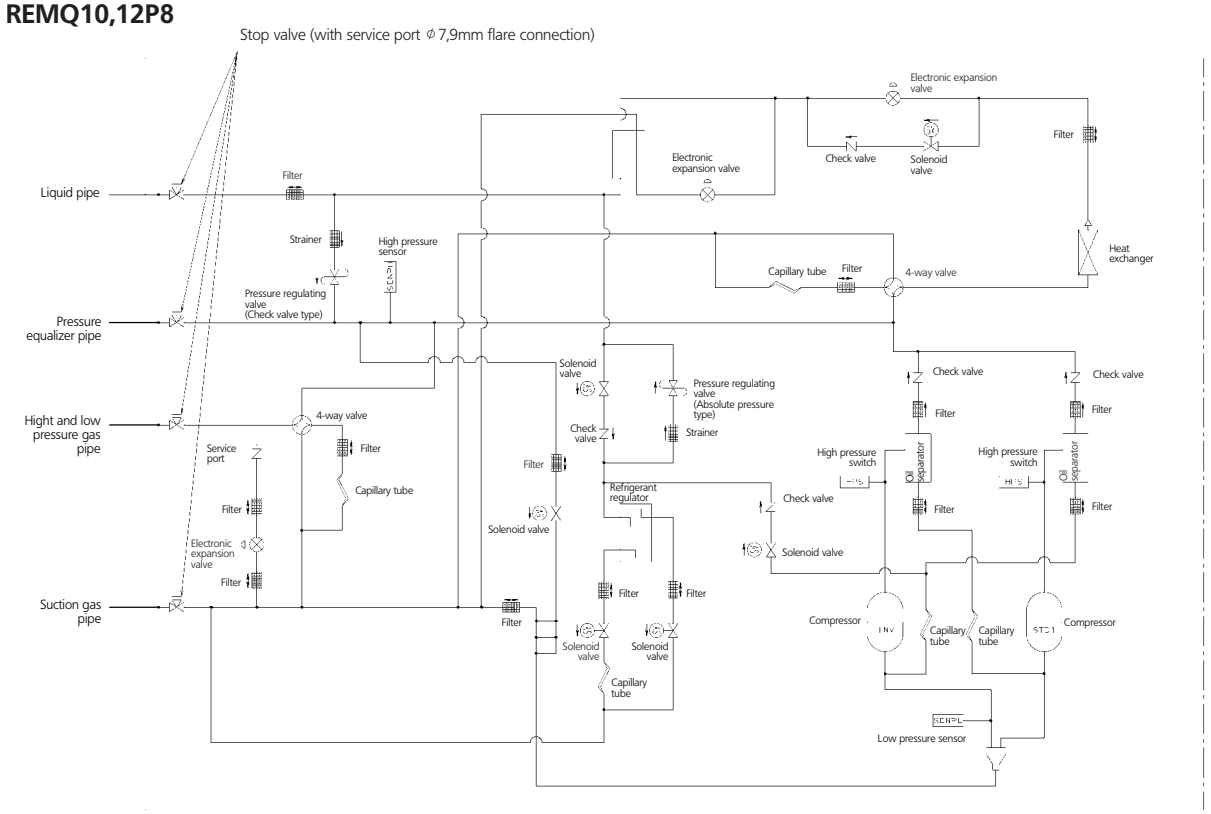

3D057742

6 Piping diagram

REMQ14,16P8

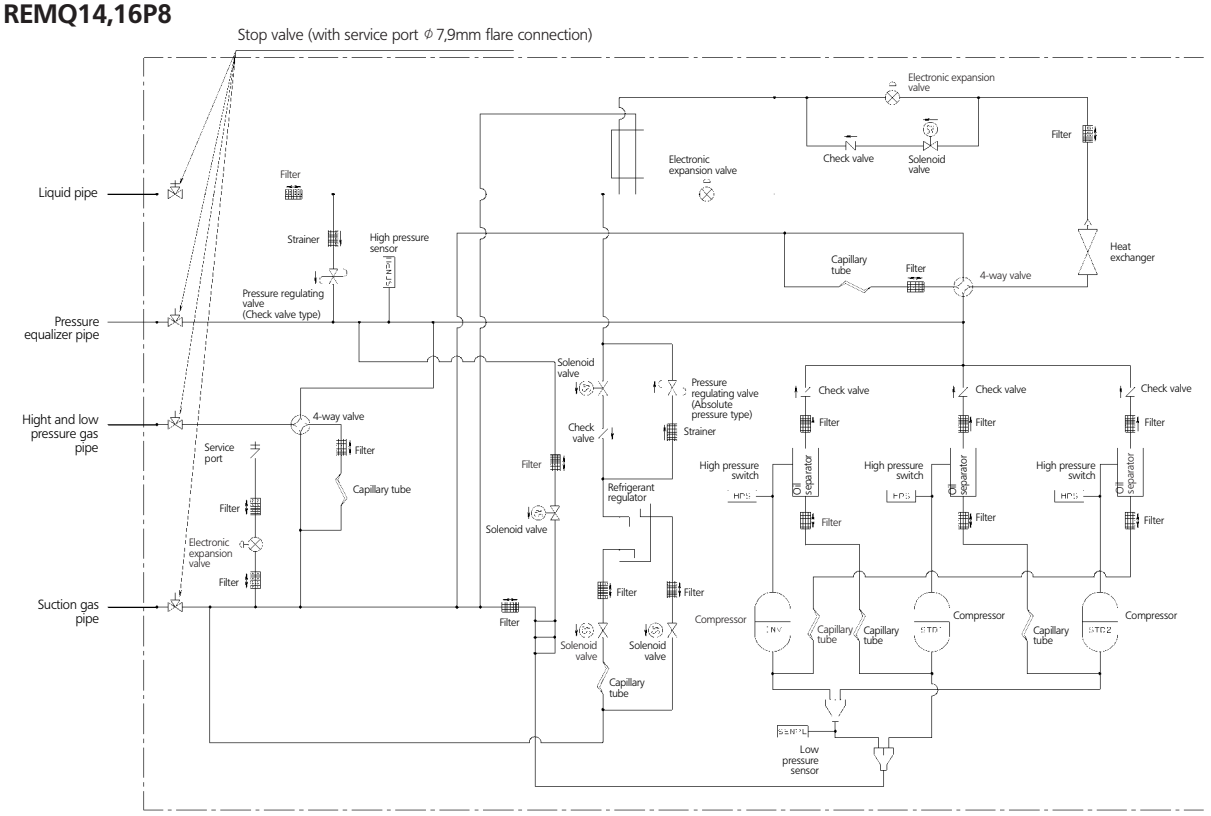

7 Wiring diagram

7 - 1 Wiring diagram

REYQ8,12P9
REYQ10P8

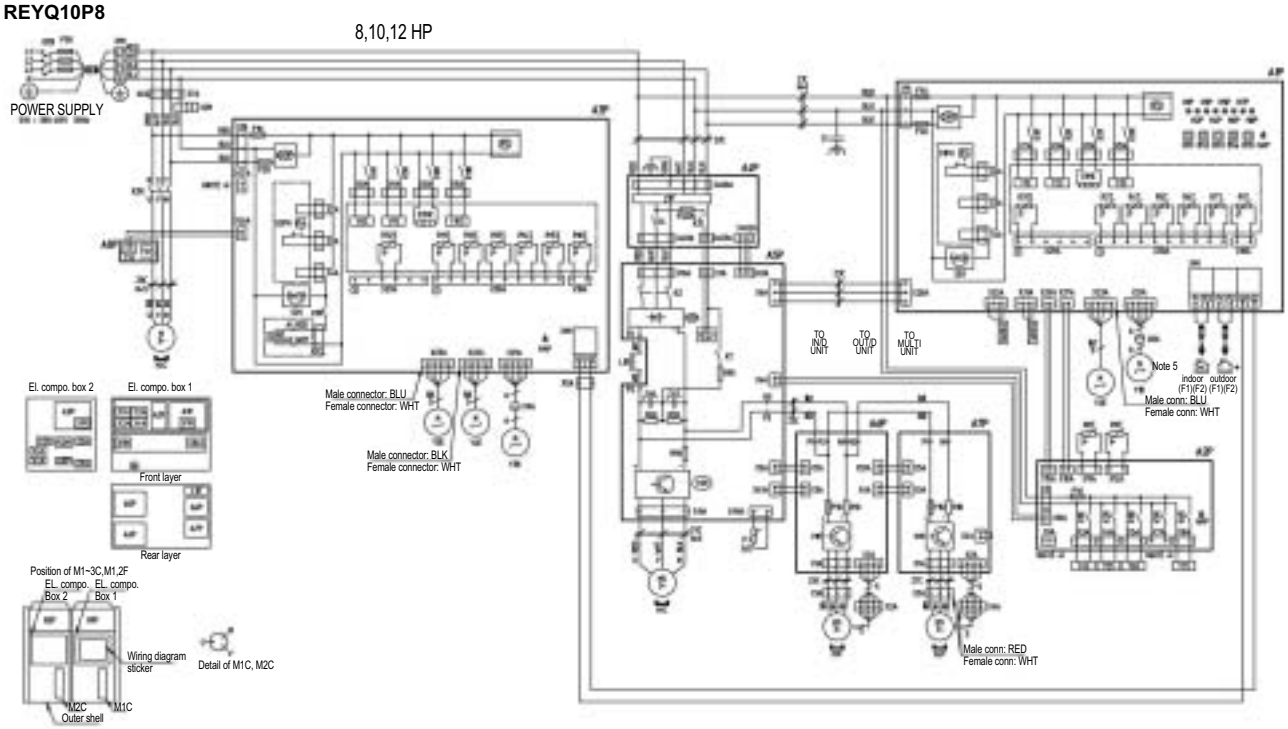

A1P~A8P	Printed circuit board		K1R~K8R, K11R	Magnetic relay		S1PH, S2PH	Pressure switch (High)	
	A1P: Main	A4P,A8P: Fan		K1R: Y4S (A2P)	K5R: For option (A2P)	T1A	Current sensor	
	A2P: Noise filter	A5P: Sub		K1R: K2M (A3P)	K5R: Y9S (A3P)	V1R	Diode bridge (A3P)	Power module (A4P,A8P)
	A3P: Inverter	A6P,A7P: Current sensor		K2R: Y5S	K6R: Y7S	V2R	Power module (A3P)	
	A4P: Noise filter			K3R: Y1S (A1P)	K7R: E1HC (A1P)	X1A~X9A	Connector	
BS1~BS5	Push button switch (Mode, Set, Return, Test, Reset)			K3R: Y6S (A2P)	K8R: E2HC (A3P)	X1M	Terminal strip (power supply)	
				K4R: Y8S	K11R: Y3S (A1P)	X1M	Terminal strip (control) (A1P, A3P)	
C1, C63, C66	Capacitor			K5R: Y2S (A1P)	K11R: Y10S (A3P)	X2M	Terminal strip (relay)	
E1HC, E2HC	Crankcase heater (A1P, A3P)		Q1DI	Earth leakage breaker		Y1E	Electronic expansion valve (main 1)	
F1U, F2U	Fuse (T, 3.15A, 250V) (A1P, A3P)		Q1RP	Reverse phase detection circuit (A1P, A3P)		Y2E	Electronic expansion valve (subcool 1)	
F1U	Fuse (T, 3.15A, 250V) (A2P)		R10	Resistor (current sensor) (A6P, A7P)		Y3E	Electronic expansion valve (main 2)	
F1U	Fuse (8A, DC650V) (A6P, A7P)		R50, R59	Resistor		Y4E	Electronic expansion valve (charge)	
F5U	Field fuse		R90	Resistor (current sensor)		Y5E	Electronic expansion valve (subcool 2)	
F400U	Fuse (T, 63A, 250V)		R95	Resistor (current limiting)		Y1S~Y10S	Solendoid valve	
H1P~H8P	Pilotlamp (service monitor - orange) [H2P] Prepare, Test - - - - - - - - - Flickering Malfunction detection - - - - - Light up		R1T~R15T R31T~R32T	Thermistor			Y1S: RMTG	Y6S: RMTT
				R1T: Air (A1P)	R8T: Suction 1		Y2S: 4 way valve (H/E 1)	Y7S: RMTO
				R1T: Fin (A5P)	R9T:		Y3S: RMTL	Y8S: 4 way valve (pipe)
HAP	Pilotlamp (service monitor - Green)(A1P, A2P, A3P)			R2T: H/E Gas 1			Y4S: Hot gas	Y9S: 4 way valve (H/E 2)
K1~K4	K1: Magnetic relay			R31T: M1C Discharge			Y5S: EV bypass 1	Y10S: EV bypass 2
	K3: Magnetic relay			R32T: M2C Discharge		Z1C~Z8C	Noise filter (ferrite core)	
	K2: Magnetic contactor (M1C)			R4T: H/E deicer 1		Z1F	Noise filter (wit surge absorber)	
	K4: Magnetic contactor (M1C)			R5T: Sub cool H/E gas1				
L1R	Reactor			R6T: Sub cool H/E liq		Connector for optional parts		
M1C, M2C	Motor (compressor)			R7T: H/E liquid 1		X7A	Operation output (A2P)	
M1F, M2F	Motor (fan)		S1NPH	Pressure sensor (High)		X9A	Power supply (adapter) (A2P)	
PS	Switching power supply (A1P, A3P, A5P)		S1NPL	Pressure sensor (Low)		X37A	Power supply (adapter) (A3P)f	

	: Terminal	Colors:	BLK:	Black	PNK:	Pink	ORG:	Orange
	: Field wiring		RED:	Red	BRN:	Brown	BLU:	Blue
	: Connector		YLW:	Yellow	GRY:	Grey		
	: Terminal		WHT:	White	GRN:	Green		
	: Protective eart (screw)							

3TW30336-1

NOTES

1 When using the option adaptor, refer to the installation manual
2 Refer to the installation manual, for connection wiring to indoor-outdoor transmission F1 - F2, outdoor transmission F1 - F2, outdoor-multi transmission Q1 - Q2 and on how to use BS1~BS5 and DS1, DS2 switch.
3 Do not operate the unit by short-circuiting protection device S1PH~S3PH

7 Wiring diagram

7 - 1 Wiring diagram

REYQ14,16P8

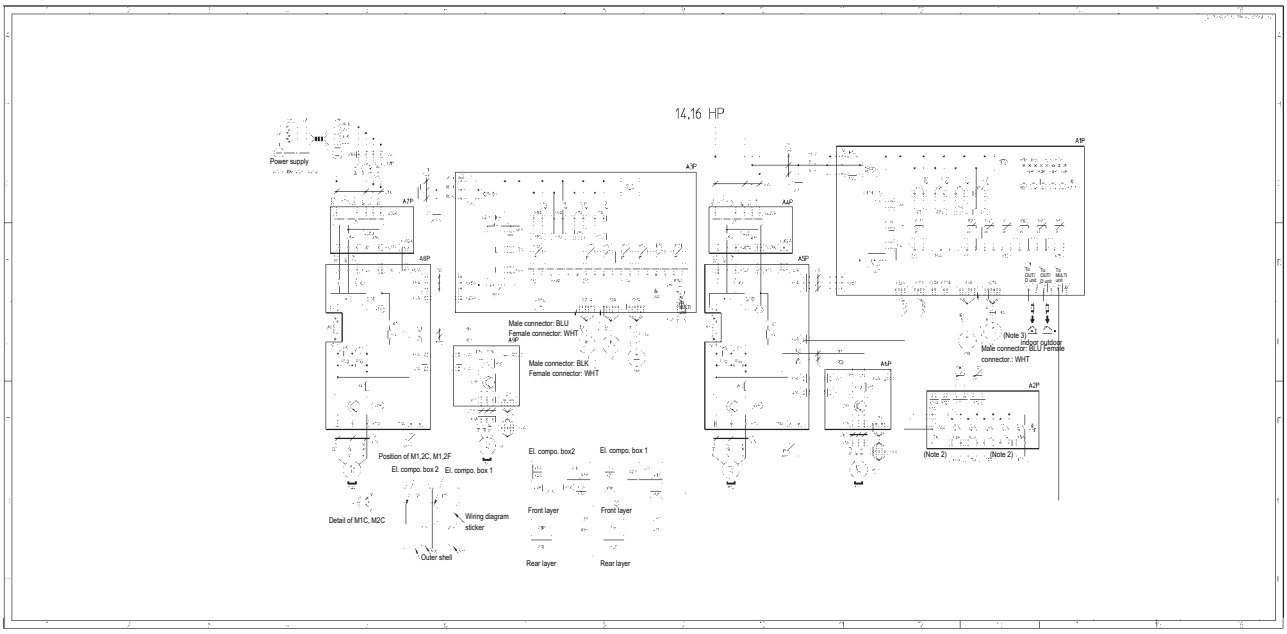

A1P~A8P	Printed circuit board		L1R,L2R	Reactor		V2R	Power module (A5P, A8P)
	A1P: Main	A4P,A7P: Noise filter	M1C, M2C	Motor (compressor)		X1A~X9A	Connector
	A2P: Sub 1	A5P, A8P: Inverter	M1F, M2F	Motor (Fan)		X1M	Terminal strip (power supply)
	A3P: Sub 2	A6P, A9P: Fan	PS	Switching power supply (A1P, A3P, A5P, A8P)		X1M	Terminal strip (control) (A1P, A3P)
BS1~BS5	Push button switch (Mode, set, return, test, reset)		Q1DI	Earth leakage breaker		X2M	Terminal strip (relay)
C1, C63, C66	Capacitor		Q1RP	Reverse phase detection circuit (A1P, A3P)		Y1E	Electronic expansion valve (main 1)
E1HC, E2HC	Crankcase heater (A1P, A3P)		R10	Resistor (current sensor) (A6P, A9P)		Y2E	Electronic expansion valve (subcool 1)
F1U, F2U	Fuse (T, 3.15A, 250V) (A1P, A3P)		R50,59	Resistor (A5P, A8P)		Y3E	Electronic expansion valve (main 2)
F1U	Fuse (T, 3.15A, 250V) (A2P)		R90	Resistor (current sensor) (A5P, A8P)		Y4E	Electronic expansion valve (charge)
F1U	Fuse (8A, DC650V) (A6P,A9P)		R95	Resistor (current limiting) (A5P, A8P)		Y5E	Electronic expansion valve (subcool 2)
F5U	Field fuse		R1T~R15T R31T, R32T	Thermistor		Y1S~Y10S	Solenoid valve
F400U	Fuse (T, 63A, 250V)			R1T: Air (A1P)	R8T: Suction 1		Y1S: RMTG / Y6S: RMTT
H1P~H8P	Pilotlamp (service monitor - orange) [H2P] Prepare, test ----------flickering Malfunction detection - - light up			R1T: Fin (A5P), (A8P)	R9T: Liquid 1		Y2S: 4way valve (H/E 1) / Y7S: RMTO
HAP	Pilot lamp (service monitor - green) (A1P, A2P, A3P)			R2T: H/E Gas 1	R10T: Suction 2		Y3S: RMTL / Y8S: 4 way valve (pipe)
K1~K4	K1: Magnetic relay (A5P, A8P)			R31T: M1C Discharge	R11T: H/E Gas 2		Y4S: Hot gas / Y9S: 4 way valve (H/E 2)
	K3: Magnetic relay (A4P, A7P)			R32T: M2C Discharge	R12T: H/E Deicer 2		Y5S: EV Bypass 1 / Y10S: EV Bypass 2
	K2: Magnetic contactor (M1C-A5P,M2C-A8P)			R4T: H/E Deicer 1	R13T: Sub cool H/E Gas 2	Z1C~Z12C	Noise filter (ferrite core)
	K4: Magnetic contactor (M1C-A4P, M2C-A7P)			R5T: Sub cool H/E Gas 1	R14T: Liquid 2	Z1F	Noise filter (with surge absorber) (A4P, A7P)
K1R~K8R; K11R	Magnetic relay			R6T:Sub cool H/E Liq	R15T: H/E Liquid 2		Connector for optional parts
	K1R: Y4S	K5R: for option (A2P)		R7T:H/E Liquid 1		X7A	Operation output (A2P)
	K2R: Y5S	K5R: Y9S (A3P)	S1NPH	Pressure sensor (high)		X9A	Power supply (adapter) (A2P)
	K3R: Y1S (A1P)	K6R: Y7S (A2P)	S2NPL	Pressure sensor (low)		X37A	Power supply (adapter) (A3P)
	K3R: Y6S (A2P)	K7R: E1HC (A1P)	S1PH, S2PH	Pressure switch (high)			
	K4R: Y8S	K7R: E2HC (A3P)	SD1	Safety devices input (A1P, A3P)			
	K5R: Y2S (A1P)	K11R: Y10S (A3P)	V1R	Diode bridge (A5P, A8P)	Power module (A6P, A9P		

: Terminal strip	Colours:	BLK:	Black	PNK:	Pink
: Connector		BLU:	Blue	RED:	Red
: Protective earth		BRN:	Brown	WHT:	White
: Terminal		ORG:	Orange	YLW:	Yellow
: Field wiring		GRY:	Grey	GRN:	Green

1TW30356-1

NOTES

1 This wiring diagram only applies to the outdoor unit
2 When using the option adapter, refer to the installation manual.
3 Refer to the installation manual, for connection wiring to indoor-outdoor tranmission F1-F2, outdoor-outdoor tranmission F1-F2, and on how to use BS1~BS5.
4 Do not operate the unit by short cicuiting protection device S1PH, S2PH.

7 Wiring diagram

7 - 1 Wiring diagram

REMQ8P9

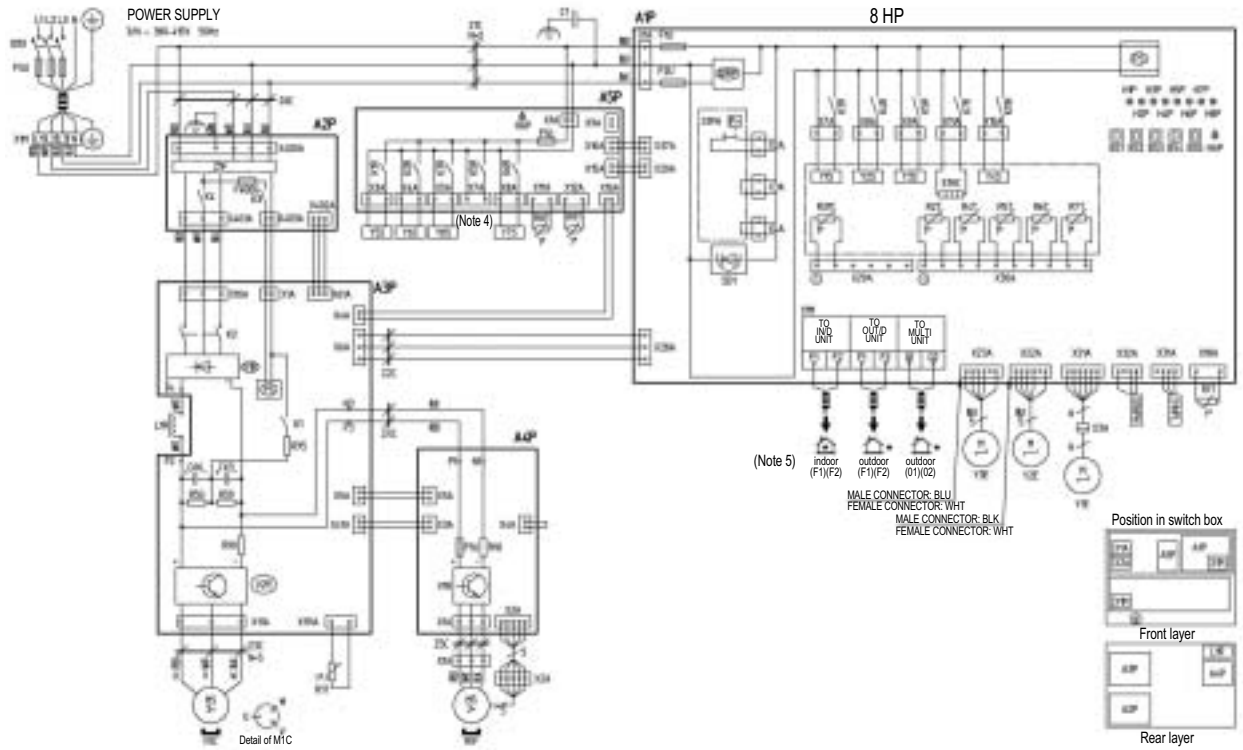

Indoor unit	Printed circuit board			Magnetic relay		S1NPH	Pressure sensor (High)	
A1P~A8P	A1P: Main	A4P,A8P: Fan	K1R~K11R	K1R: Y5S (A1P)	K2R: Y6S (A5P)	S1NPL	Pressure sensor (Low)	
	A2P: Noise filter	A5P: Sub		K3R: Y1S (A1P)	K3R: Y1S (A5P)	S1PH	Pressure switch (High)	
	A3P: Inverter			K4R: Y2S (A1P)	K5R: Y3S (A1P)	SD1	Safety devices input	
BS1~BS5	Push button switch (Mode, Set, Return, Test, Reset)			K5R: (For option) (A5P)	K6R: Y7S (A5P)	V1R	Diode bridge (A3P)	Power module (A4P)
				K7R: E1HC (A1P)	K11R: Y4S (A1P)	V2R	Power module (A3P)	
C1, C63, C66	Capacitor		L1R	Reactor		X1A~X4A	Connector (M1F)	
E1HC	Crankcase heater		M1C	Motor (Compressor)		X3A	Connector (Y1E)	
F1U, F2U	Fuse (T, 3.15A, 250V) (A1P)		M1F	Motor (Fan)		X1M	Terminal strip (Power supply)	
F1U	Fuse (T, 3.15A, 250V) (A5P)		PS	Switching power supply (A1P, A3P)		X1M	Terminal strip (Control) (A1P)	
F1U	Fuse (8A, DC650V) (A4P)		Q1DI	Earth leakage breaker		Y1E	Electronic expansion valve (Main)	
F5U	Field fuse		Q1RP	Reverse phase detection circuit		Y2E	Electronic expansion valve (Charge)	
F400U	Fuse (T, 63A, 250V) (A2P)		R10	Resistor (current sensor) (A4P)		Y3E	Electronic expansion valve (Subcool)	
H1P~H8P	Pilotlamp (service monitor -orange) [H2P] Prepare, Test - - - - - - - - - - Flickering Malfunction detection - - - - - - Light up		R50, R59	Resistor		Y1S~Y3S	Solenoid valve	
			R90	Resistor (current sensor)			Y1S: RMTG	Y2S: 4 way valve (pipe)
			R95	Resistor (current limiting)			Y3S: 4 way valve (H/E Gas)	
HAP	Pilotlamp (service monitor - green) (A1P)(A5P)		R1T~R9T R31T~R33T	Thermistor			Y4S: RMTL	Y5S: Hot gas
K1~K4	K1: Magnetic relay	K2: Magnetic contactor (M1C)		R1T: Air (A1P)	R6T: Sub cool H/E liq		Y6S: EV bypass	Y7S: RMTO
	K3: Magnetic relay	K4: Magnetic contactor (M1C)		R1T: Fin (A3P)	R7T: H/E Liquid		Y8S: RMTT	
Connector for optional parts				R2T: H/E Gas	R8T: Suction	Z1C~Z6C	Noise filter (ferrite core)	
X7A	Operation output (A5P)			R4T: H/E Deicer	R9T: Liquid	Z1F	Noise filter (with surge absorber)	
X9A	Power supply (ADAPTER) (A5P)			R5T: Sub cool H/E gas	R31T: M1C Discharge			

□□□□	: Terminal strip	Colors:	BLK:	Black	PNK:	Pink	ORG:	Orange
	: Field wiring		RED:	Red	BRN:	Brown	BLU:	Blue
	: Connector		YLW:	Yellow	GRY:	Grey		
	: Terminal		WHT:	White	GRN:	Green		
	: Protective earth (screw)							

2TW29116-1A

NOTES

1 When using the option adaptor, refer to the installation manual

2 Refer to the installation manual, for connection wiring to indoor-outdoor transmission F1 - F2, outdoor transmission F1 - F2, outdoor-multi transmission Q1 - Q2 and on how to use BS1~BS5 and DS1, DS2 switch.

3 Do not operate the unit by short-circuiting protection device S1PH~S3PH

7 Wiring diagram

7 - 1 Wiring diagram

REMQ10,12P8

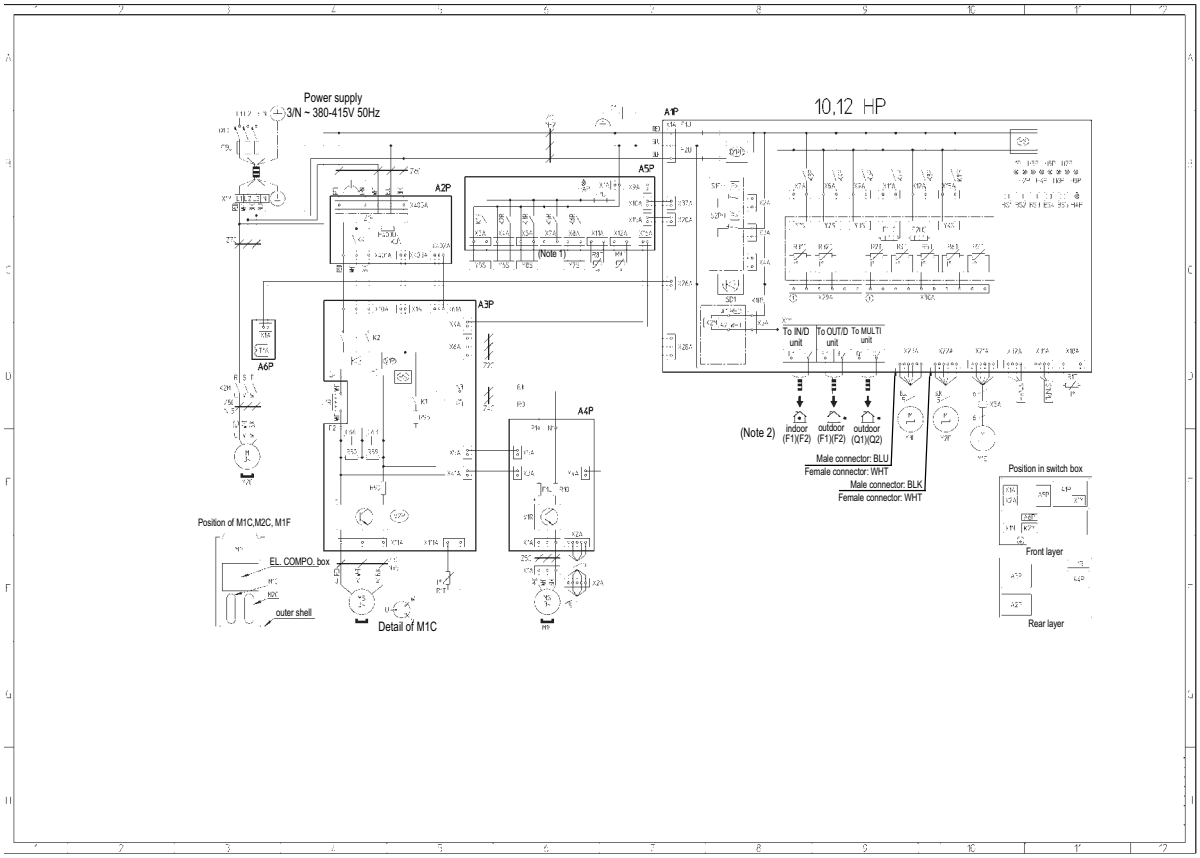

A1P~A8P	Printed circuit board		L1R	Reactor		X1M	Terminal strip (control) (A1P)
	A1P: main	A4P: fan	M1C, M2C	Motor (compressor)		Y1E	Electronic expansion valve (main)
	A2P: noise filter	A5P: sub	M1F	Motor (fan)		Y2E	Electronic expansion valve (charge)
	A3P: inverter	A6P: current sensor	PS	Switching power supply (A1P, A3P)		Y3E	Electronic expansion valve (subcool)
BS1~BS5	Push button switch		Q1DI	Earth leakage breaker		Y1S~Y3S	Solenoid valve
	(Mode, set, return, test, reset)		Q1RP	Reverse phase detection circuit			Y1S: RMTG / Y2S: 4 way vvalve (pipe)
C1, C63, C66	Capacitor		R10	Resistor (current sensor) (A4P)			Y3S: 4 way valve (H/E gas)
E1HC, E2HC	Crankcase Heater		R50, R59	Resistor			Y4S: RMTL / Y5S: hot gas
F1U, F2U	Fuse (T, 3.15A, 250V) (A1P)		R90	Resistor (current sensor)			Y6S: EV bypass / Y7S: RMTO
F1U	Fuse (T, 3.15A, 250V) (A5P)		R95	Resistor (current limiting)			Y8S: RMTT
F5U	Field fuse		R1T~R9T R31T~R33T	Thermistor		Z1C~Z8C	Noise filter (ferrite core)
F400U	Fuse (T, 6.3A, 250V) (A2P)			R1T: air (A1P)	R4T: H/E deicer	Z1F	Noise filter (with surge absorber)
H1P~H8P	Pilotlamp (service monitor - orange)			R1T: fin (A3P)	R5T: sub cool H/E gas		
	[H2P] Prepare, test - - - - - - - - flickering			R2T: H/E gas	R8T: sub cool H/E liq	Connector for optional parts	
	Malfunction detection - - light up			R31T: M1C discharge	R8T: suction	X7A	Operation output (A5P)
HAP	Pilotlamp (service monitor - green (A1P)(A5P)				R9T: liquid	X9A	Power supply (adapter) (A5P)
K1~K4	K1: magnetic relay	K2:magnetic contactor (M1C)	S1NPH	Pressure sensor (high)			
	K3: magnetic relay	K4:magnetic contactor (M1C)	S1NPL	Pressure sensor (low)			
K1R~K11R	Magnetic relay		S1PH, S2PH	Pressure swith (high)			
	K1R: K2M (A1P)	K2R: Y5S (A5P)	T1A	Current sensor			
	K2R: Y6S (A5P)	K3R: Y1S (A1P)	V1R	Diode bridge (A3P)	Power module (A4P)		
	K3R: Y1S (A1P)	K4R: Y2S (A1P)	V2R	Power module (A3P)			
	K5R: Y3S (A1P)	K5R: (for option) (A5P)	X1A, X2A	Connector (M1F)			
	K6R: Y7S (A5P)	K7R: E1HC (A1P)	X3A	Connector (Y1E)			
	K8R: E2HC (A1P)	K11R: Y4S (A1P)	X1M	Terminal strip (power supply)			

	: Field wiring	Colors:	BLK: Black	PNK:	Pink
	: Terminal Strip		BLU: Blue	RED:	Red
	: Connector		BRN: Brown	WHT:	White
	: Terminal		ORG: Orange	YLW:	Yellow
	: Protective earth (screw)		GRY: Grey	GRN:	Green

2TW29126-1A

NOTES

1 When using the option adapter, refer to the installation manual.

2 Refer to the installation manual, for connection wiring to indoor-outdoor transmission F1 - F2, outdoor-outdoor transmission F1 - F2, outdoor-multi transmission Q1 - Q2 and on how to use BS1~BS5 and DS1, DS2 switch.

3 Do not operate the unit by short-circuiting protection device S1PH, S2PH.

7 Wiring diagram

7 - 1 Wiring diagram

REMQ14,16P8

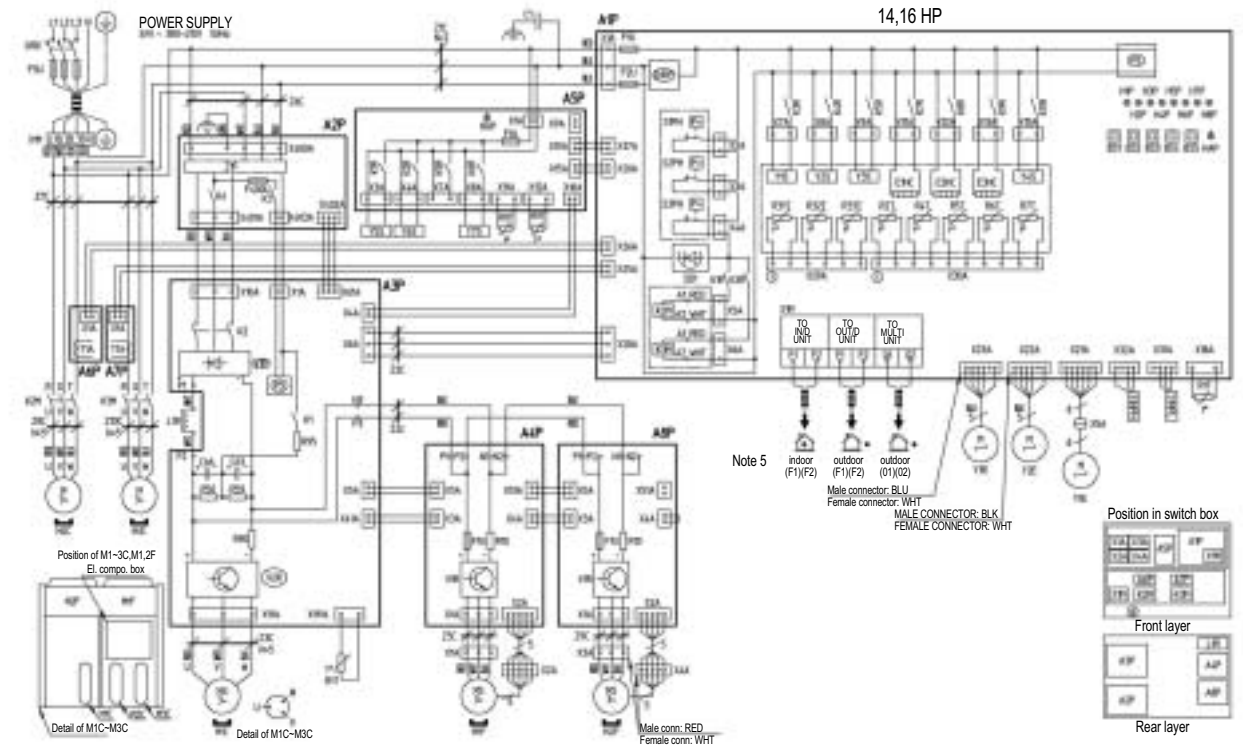

Indoor unit				Magnetic relay				
A1P~A8P	A1P: Main	A4P,A8P: Fan	K1R~K11R	K1R: K2M (A1P)	K1R: Y5S (A5P)	V1R	Diode bridge (A3P)	Power module (A4P,A8P)
	A2P: Noise filter	A5P: Sub		K2R: K3M (A1P)	K2R: Y6S (A5P)	V2R	Power module (A3P)	
	A3P: Inverter	A6P,A7P: Current sensor		K3R: Y1S (A1P)	K4R: Y2S (A1P)	X1A~X4A	Connector (M1F, M2F)	
BS1~BS5	Push button switch (Mode, Set, Return, Test, Reset)			K5R: Y3S (A1P)	K5R: (for option) (A5P)	X5A	Connector (Y1E)	
				K6R: Y7S (A5P)	K7R: E1HC (A1P)	X1M	Terminal strip (Power supply)	
C1, C63, C66	Capacitor			K8R: E2HC (A1P)	K9R: E3HC (A1P)	X1M	Terminal strip (Control) (A1P)	
E1HC~E3HC	Crankcase heater			K11R: Y4S (A1P)		Y1E	Electronic expansion valve (Main)	
F1U, F2U	Fuse (T, 3.15A, 250V) (A1P)		Q1RP	Reverse phase detection circuit		Y2E	Electronic expansion valve (Charge)	
F1U	Fuse (T, 3.15A, 250V) (A5P)		R10	Resistor (current sensor) (A4P,A8P)		Y3E	Electronic expansion valve (Subcool)	
F1U	Fuse (8A, DC650V) (A4P,A8P)		R50, R59	Resistor		Y1S~Y3S	Solenoid valve	
F5U	Field fusef		R90	Resistor (current sensor)			Y1S: RMTG	Y2S: 4 way valve (pipe)
F400U	Fuse (T, 63A, 250V) (A2P)		R95	Resistor (current limiting)			Y3S: 4 way valve (H/E Gas)	
H1P~H8P	Pilotlamp (service monitor -orange) [H2P] Prepare, Test - - - - - - - - - - Flickering Malfunction detection - - - - - - Light up		R1T~R9T R31T~R33T	Thermistor			Y4S: RMTL	Y5S: Hots gas
							Y6S: EV bypass	Y7S: RMTO
				R1T: Air (A1P)	R4T: H/E Deicer	Z1C~Z10C	Noise filter (ferrite core)	
				R1T: Fin (A3P)	R5T: Sub cool H/E gas	Z1F	Noise filter (with surge absorber)	
HAP	Pilotlamp (service monitor - orange)			R2T: H/E Gas	R6T: Sub cool H/E liq			
K1~K4	K1: Magnetic relay	K2: Magnetic contactor (M1C)		R31T: M1C Discharge	R7T: H/E Liquid	Connector for optional parts		
	K3: Magnetic relay	K4: Magnetic contactor (M1C)		R32T: M2C Discharge	R8T: Suction	X7A	Operation output (A5P)	
K2M, K3M	Magnetic contactor (M2C, M3C)			R33T: M3C Discharge	R9T: Liquid	X9A	Power supply (ADAPTER) (A5P)	
L1R	Reactor		S1NPH	Pressure sensor (High)				
M1C~M3C	Motor (Compressor)		S1NPL	Pressure sensor (Low)				
M1F, M2F	Motor (Fan)		S1PH~S3PH	Pressure switch (High)				
PS	Switching power supply (A1P, A3P)		SD1	Safety devices input				
Q1DI	Earth leakage breaker		T1A	Current sensor (A6P, A7P)				

□□□□	: Terminal	Colors:	BLK:	Black	PNK:	Pink	ORG:	Orange
	: Field wiring		RED:	Red	BRN:	Brown	BLU:	Blue
	: Connector		YLW:	Yellow	GRY:	Grey		
	: Terminal		WHT:	White	GRN:	Green		
	: Protective eart (screw)							

2TW29146-1

NOTES

1 When using the option adaptor, refer to the installation manual
2 Refer to the installation manual, for connection wiring to
indoor-outdoor transmission F1 - F2, outdoor transmission F1 - F2,
outdoor-multi transmission Q1 - Q2 and on how to use BS1~BS5 and DS1, DS2 switch.
3 Do not operate the unit by short-circuiting protection device S1PH~S3PH

7 Wiring diagram

7 - 2 External connection diagram

REYQ8,12P9

REYQ10,14,16P8

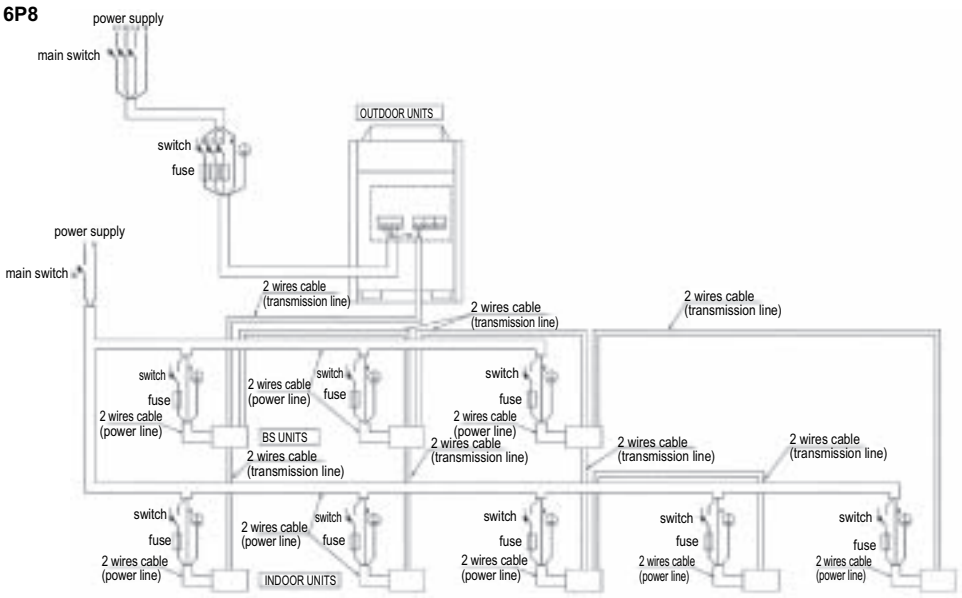

NOTES

1 All wiring, components and materials to be procured on the site must comply with the applicable local and national codes
2 Use copper conducters only.
3 As for details, see wiring diagram.
4 Install circuit breaker for safety.
5 All field wiring and components must be provided by licensed electrician.
6 Unit shall be grounded in compliance with the applicable local and national codes
7 Wiring shown are general points-of-connection guides only and are not intended for or to include all details for a specific installation.
8 Be sure to install the switch and the fuse to the power line of each equipment.
9 Install the main switch that can interrupt all the power sources in an integrated manner because this system consists of the equipment utilizing the multiple power sources.
10 If there exists the possibility of reversed phase, lose phase, momentary blackout or the power goes on and off while the product is operating, attach a reversed phase protection circuit locally.
Running the product in reversed phase may break the compressor and other parts.

3D057764A

REYQ18,20P9 REYQ22-32P8

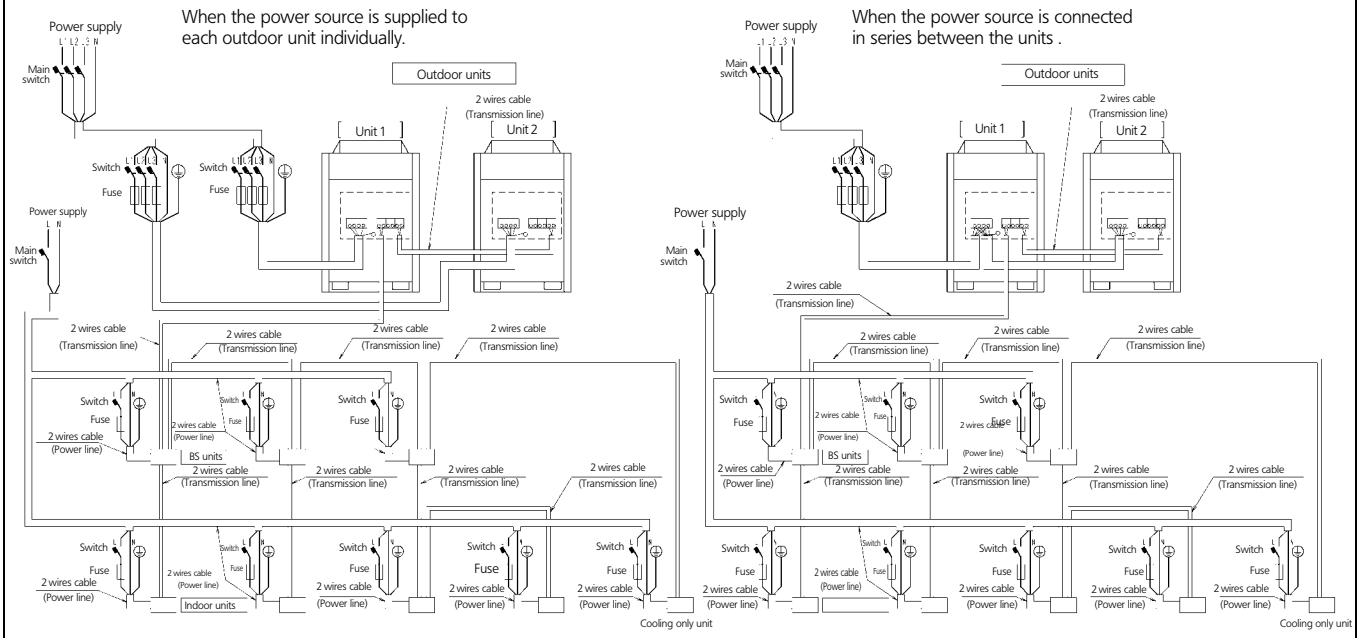

Notes)

1 All wiring, components and materials to be produced on the site must comply with the applicable local and national codes.
2 Use copper conductors only.
3 As for details, see wiring diagram.
4 Install circuit breakers for safety.
5 All field wiring and components must be installed by a licensed electrician.
6 The unit shall be grounded in compliance with the applicable local and national codes.
7 Wiring shown are general points-of-connection guides only and are not intended for or to include all details for a specific installation.
8 Be sure to install the switch and the fuse to the power line of each equipment.
9 Install the main switch that can interrupt all power sources in an integrated manner because this system consists of the equipment utilizing the multiple power sources.
10 The capacity of UNIT 1 must be larger than UNIT 2 when the power source is connected in series between the units.
11 If there exists the possibility of reversed phase, lose phase, momentary blackout or the power goes on and off while the product is operating, attach a reversed phase protection circuit locally.
Running the product in reversed phase may break the compressor and other parts.

3D057762

7 Wiring diagram

7 - 2 External connection diagram

REYQ34,36P9 **REYQ38-48P8**

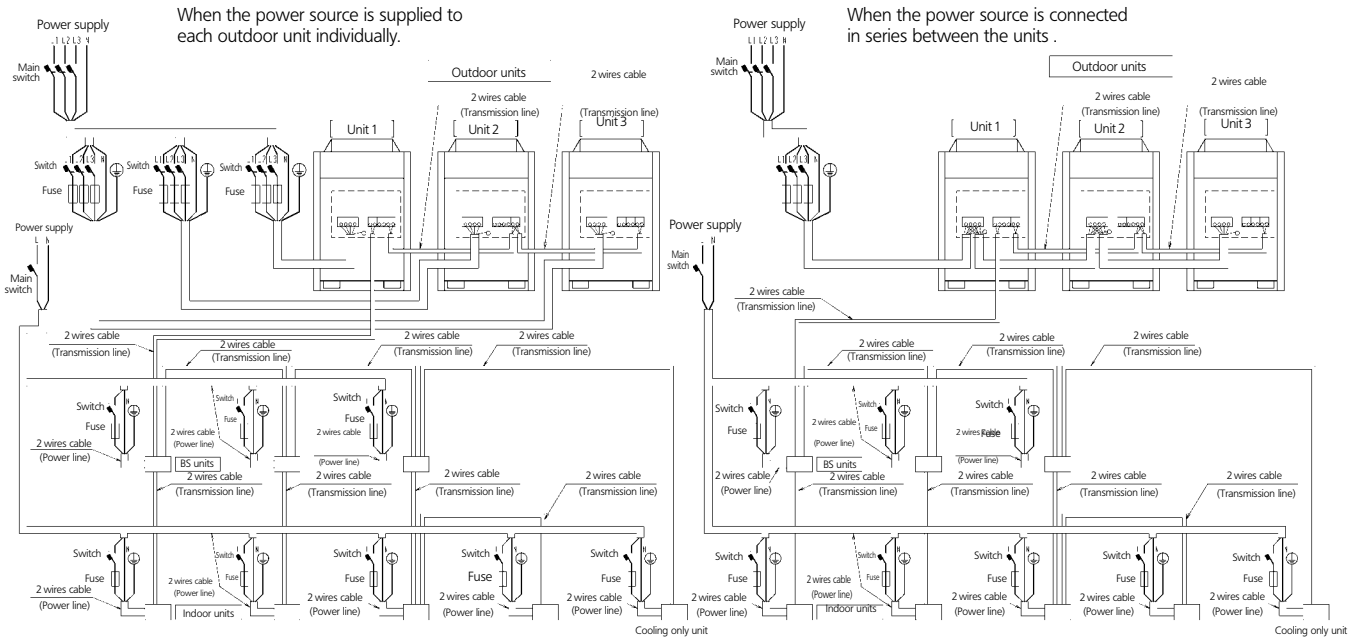

Notes)

1 All wiring, components and materials to be produced on the site must comply with the applicable local and national codes.
2 Use copper conductors only.
3 As for details, see wiring diagram.
4 Install circuit breakers for safety.
5 All field wiring and components must be installed by a licensed electrician.
6 The unit shall be grounded in compliance with the applicable local and national codes.
7 Wiring shown are general points-of-connection guides only and are not intended for or to include all details for a specific installation.
8 Be sure to install the switch and the fuse to the power line of each equipment.
9 Install the main switch that can interrupt all power sources in an integrated manner because this system consists of the equipment utilizing the multiple power sources.
10 The capacity of UNIT 1 must be larger than UNIT 2 when the power source is connected in series between the units.
11 If there exists the possibility of reversed phase, lose phase, momentary blackout or the power goes on and off while the product is operating, attach a reversed phase protection circuit locally.
Running the product in reversed phase may break the compressor and other parts.

3D057763

8 Sound data

8 - 1 Sound pressure spectrum

REYQ8P9

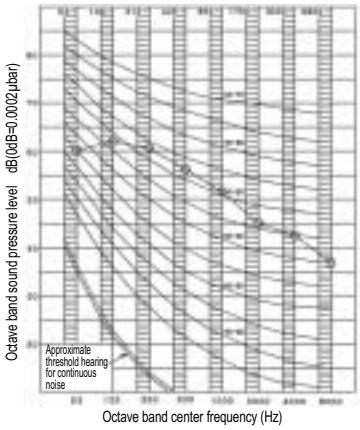

4D58294A

NOTE

1 Over All (dB):
(B, G, N is already rectified)

Scale	50Hz
A	58
C	66

2 Operating conditons:
- Power source: Y1: 380-415V 50Hz
- JIS Standard

3 Measuring place: Anechoic chamber (Conversion value)

4 Location of microphone

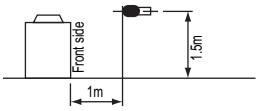

5 The operating sound is measured in anechoic chamber.
If it is measured under the actual istallation conditions, it is normally over the set value due to enviromental noise and sound reflection.

REYQ10P8

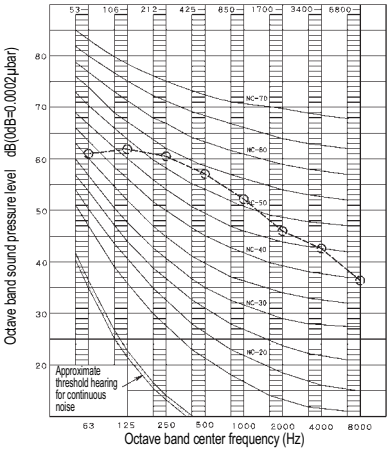

4D058295

NOTE

1 Over All (dB):
(B, G, N is already rectified)

Scale	50Hz
A	58
C	66

2 Operating conditons:
- Power source Y1: 380-415V 50Hz
- JIS standard

3 Measuring place: Anechoic chamber (conversion value)
The operating sound is measured in anechoic chamber, if it is measured under the actual installation conditions, it is normally over the set value due to environmental noise and sound reflection.

4 Location of microphone

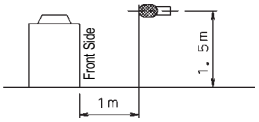

REYQ12P9

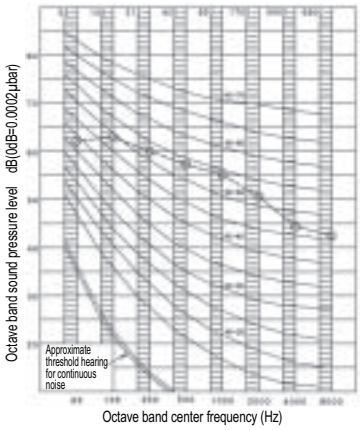

4D58296A

NOTE

1 Over All (dB):
(B, G, N is already rectified)

Scale	50Hz
A	60
C	67

2 Operating conditons:
- Power source: Y1: 380-415V 50Hz
- JIS Standard

3 Measuring place: Anechoic chamber (Conversion value)

4 Location of microphone

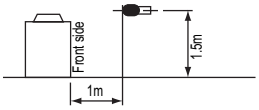

5 The operating sound is measured in anechoic chamber.
If it is measured under the actual istallation conditions, it is normally over the set value due to enviromental noise and sound reflection.

REYQ14P8

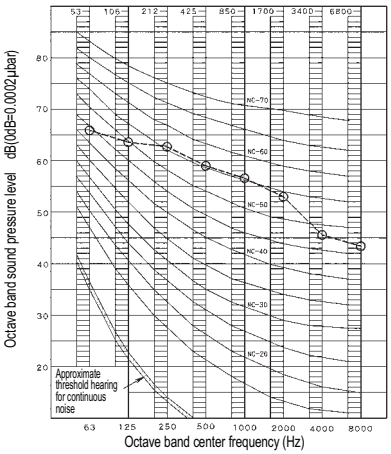

4D058297

NOTE

1 Over All (dB):
(B, G, N is already rectified)

Scale	50Hz
A	62
C	69

2 Operating conditons:
- Power source Y1: 380-415V 50Hz
- JIS standard

3 Measuring place: Anechoic chamber (conversion value)
The operating sound is measured in anechoic chamber, if it is measured under the actual installation conditions, it is normally over the set value due to environmental noise and sound reflection.

4 Location of microphone:

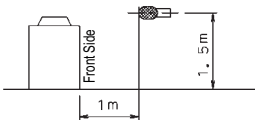

8 Sound data

8 - 1 Sound pressure spectrum

REYQ16P8

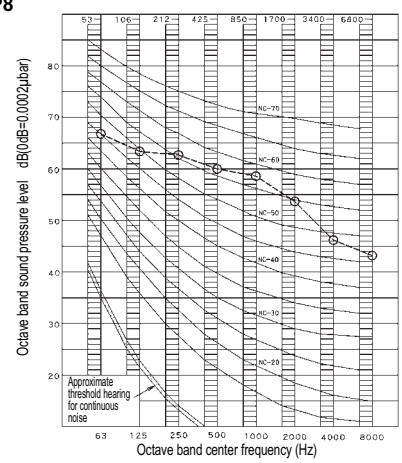

4D058298

NOTE

Scale	50Hz
A	63
C	70

1 Over All (dB):
(B, G, N is already rectified)

2 Operating conditons:
- Power source Y1: 380-415V 50Hz
- JIS standard

3 Measuring place: Anechoic chamber (conversion value)
The operating sound is measured in anechoic chamber, if it is measured under the actual installation conditions, it is normally over the set value due to environmental noise and sound reflection.

4 Location of microphone

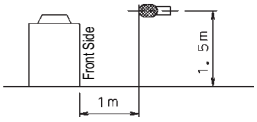

REMQ8P9 4D057843

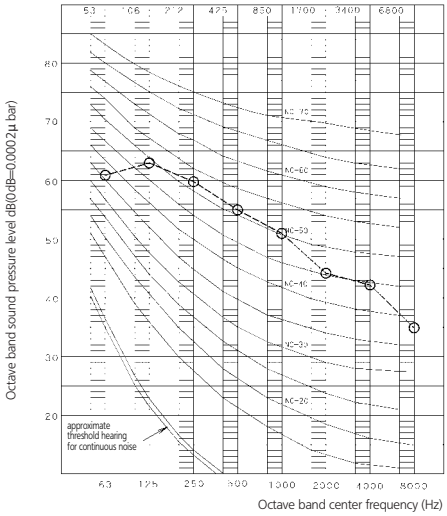

NOTES

1 Over all (dB)
(B,G,N is already rectified)

Scale	50Hz
A	57
C	66

2 Operating conditions:
- Power source: Y1: 380-415V 50Hz
- JIS standard

Measuring place: Anechoic chamber (conversion value)

3 The operating sound is measured in anechoic chamber, if it is measured under the actual installation conditions, it is normally over the set value due to enviromental noise and sound reflection.

4 Location of microphone

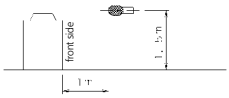

REMQ10P8 4D057844

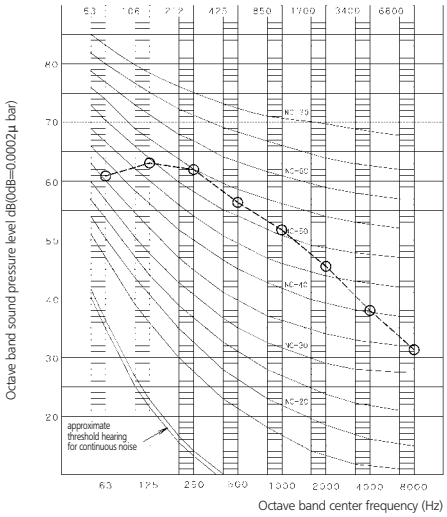

NOTES

1 Over all (dB)
(B,G,N is already rectified)

Scale	50Hz
A	58
C	67

2 Operating conditions:
- Power source: Y1: 380-415V 50Hz
- JIS standard

Measuring place: Anechoic chamber (conversion value)

3 The operating sound is measured in anechoic chamber, if it is measured under the actual installation conditions, it is normally over the set value due to enviromental noise and sound reflection.

4 Location of microphone

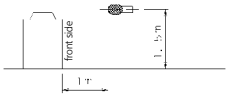

REMQ12P8 4D057894

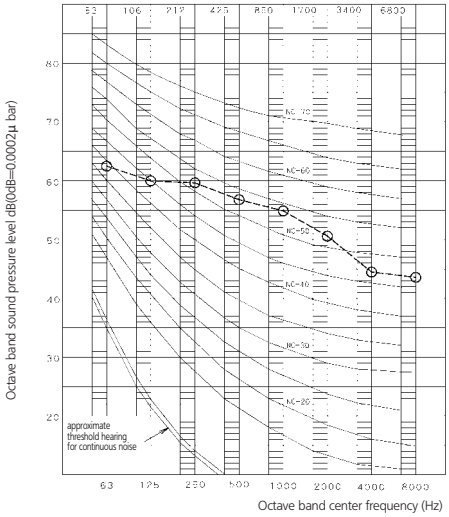

NOTES

1 Over all (dB)
(B,G,N is already rectified)

Scale	50Hz
A	60
C	66

2 Operating conditions:
- Power source: Y1: 380-415V 50Hz
- JIS standard

Measuring place: Anechoic chamber (conversion value)

3 The operating sound is measured in anechoic chamber, if it is measured under the actual installation conditions, it is normally over the set value due to enviromental noise and sound reflection.

4 Location of microphone

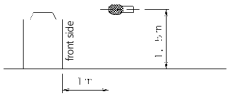

8 Sound data

8 - 1 Sound pressure spectrum

REMQ14,16P9 4D057845

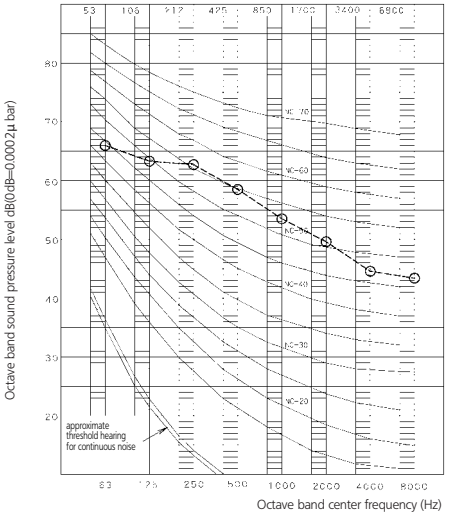

NOTES

1 Over all (dB)
(B,G,N is already rectified)

Scale	50Hz
A	60
C	69

2 Operating conditions:
- Power source: Y1: 380-415V 50Hz
- JIS standard

Measuring place: Anechoic chamber (conversion value)

3 The operating sound is measured in anechoic chamber, if it is measured under the actual installation conditions, it is normally over the set value due to enviromental noise and sound reflection.

4 Location of microphone

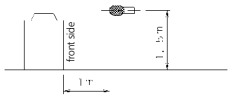

REYQ18,20,34,36P9 - REYQ22~32,38~48P8

Sound power and pressure (Cooling)

Unit	Sound Power [dBA]	Sound Pressure [dBA]
REYQ18P9	81	61
REYQ20P9	83	62
REYQ22P8	83	63
REYQ24P8	83	63
REYQ26P8	83	63
REYQ28P8	83	63
REYQ30P8	83	63
REYQ32P8	83	63
REYQ34P9	84	64
REYQ36P9	85	64
REYQ38P8	85	65
REYQ40P8	85	65
REYQ42P8	85	65
REYQ44P8	85	65
REYQ46P8	85	65
REYQ48P8	85	65

4TW29127-2A

NOTES

1 Sound power level is an absolute value that a sound source generates.

2 Sound pressure level is a relative value, depending on the distance and acoustic environment. For more details, please refer to the sound level drawings.

3 Mentioned values are theoretical values based on sound results of individual installed units. Possible deviatons for sound values due to variety of installation patterns are not taken into account.

8 Sound data

8 - 2 Sound power spectrum

REYQ8P9

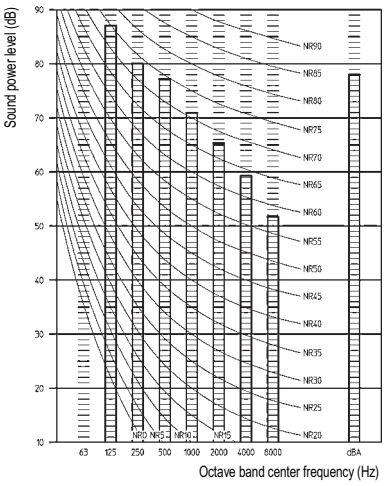

3TW30327-1

NOTE

1 dBA = A-weighted sound power level. (A-scale according to IEC).
2 Reference acoustic intesity 0dB = 10E-6μW/m^2.
3 Measured according to ISO 3744

REYQ10P8

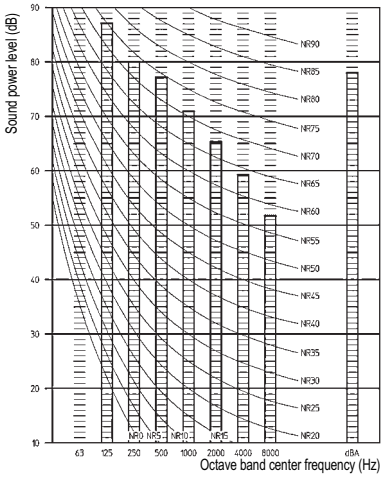

3TW30337-1

NOTE

1 dBA = A-weighted sound power level. (A-scale according to IEC).
2 Reference acoustic intesity 0dB = 10E-6μW/m^2.
3 Measured according to ISO 3744

REYQ12P9

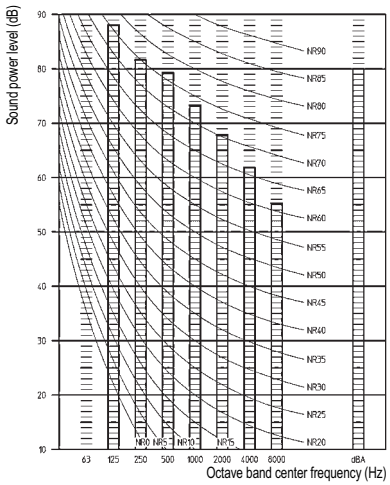

3TW30347-1

NOTE

1 dBA = A-weighted sound power level. (A-scale according to IEC).
2 Reference acoustic intesity 0dB = 10E-6μW/m^2.
3 Measured according to ISO 3744

REYQ14P8

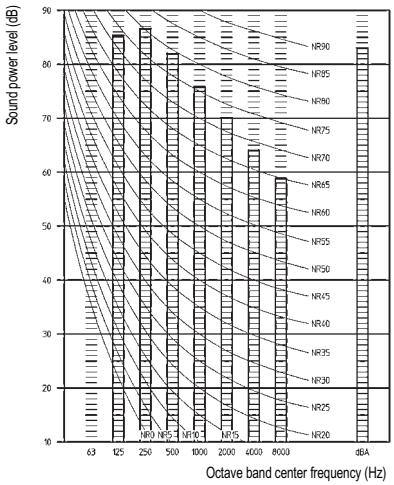

3TW30357-1

NOTE

1 dBA = A-weighted sound power level. (A-scale according to IEC).
2 Reference acoustic intesity 0dB = 10E-6μW/m^2.
3 Measured according to ISO 3744

8 Sound data

8 - 2 Sound power spectrum

REYQ16P8

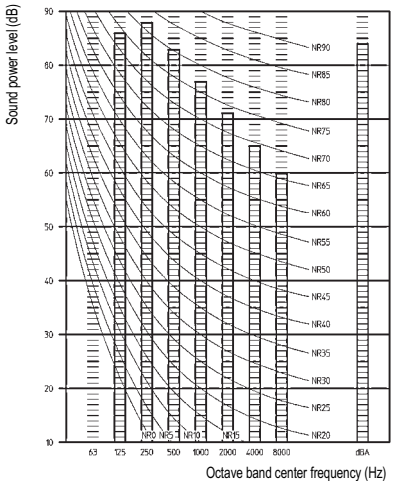

3TW30367-1

NOTE

1 dBA = A-weighted sound power level. (A-scale according to IEC).
2 Reference acoustic intesity 0dB = 10E-6μW/m^2.
3 Measured according to ISO 3744

REMQ8P9 3TW29117-1

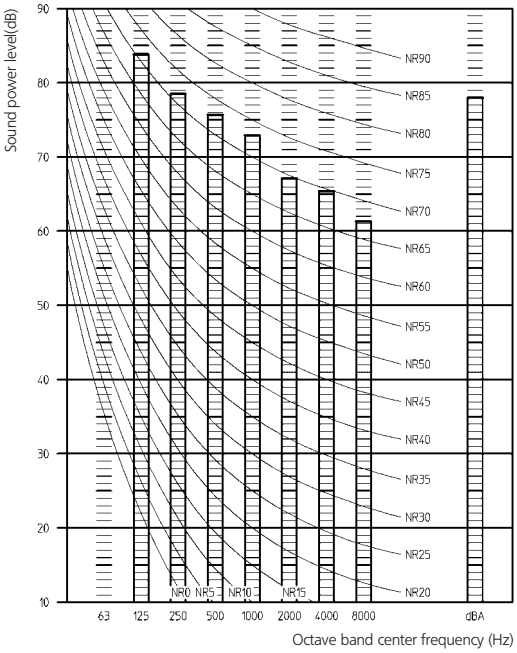

NOTES

1 dBA = A-weighted sound power level (A-scale according to IEC)
2 Reference acoustic intensity 0dB = 10E-6μW/m^2.
3 Measured according to ISO 3744

REMQ10P8 3TW29127-1

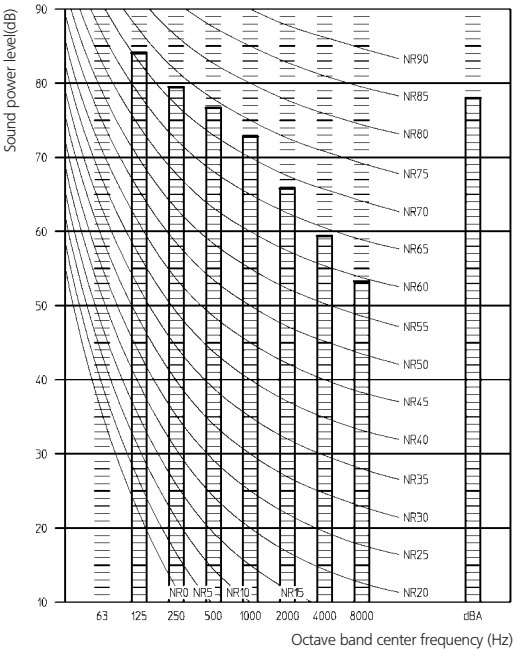

NOTES

1 dBA = A-weighted sound power level (A-scale according to IEC)
2 Reference acoustic intensity 0dB = 10E-6μW/m^2.
3 Measured according to ISO 3744

REMQ12P8 3TW29137-1

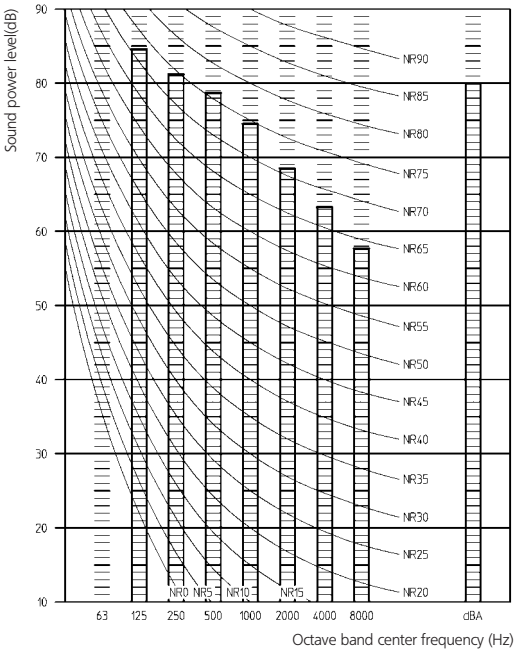

NOTES

1 dBA = A-weighted sound power level (A-scale according to IEC)
2 Reference acoustic intensity 0dB = 10E-6μW/m^2.
3 Measured according to ISO 3744

8 Sound data

8 - 2 Sound power spectrum

REMQ14,16P8 3TW29147-1

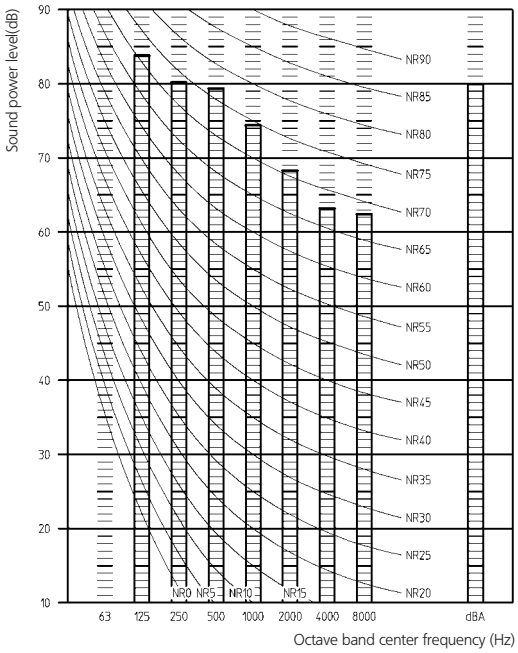

NOTES

1 dBA = A-weighted sound power level (A-scale according to IEC)
2 Reference acoustic intensity 0dB = 10E-6μW/m^2.
3 Measured according to ISO 3744

9 Installation

9 - 1 Service space

REYQ-P8/P9 / REMQ-P8/P9

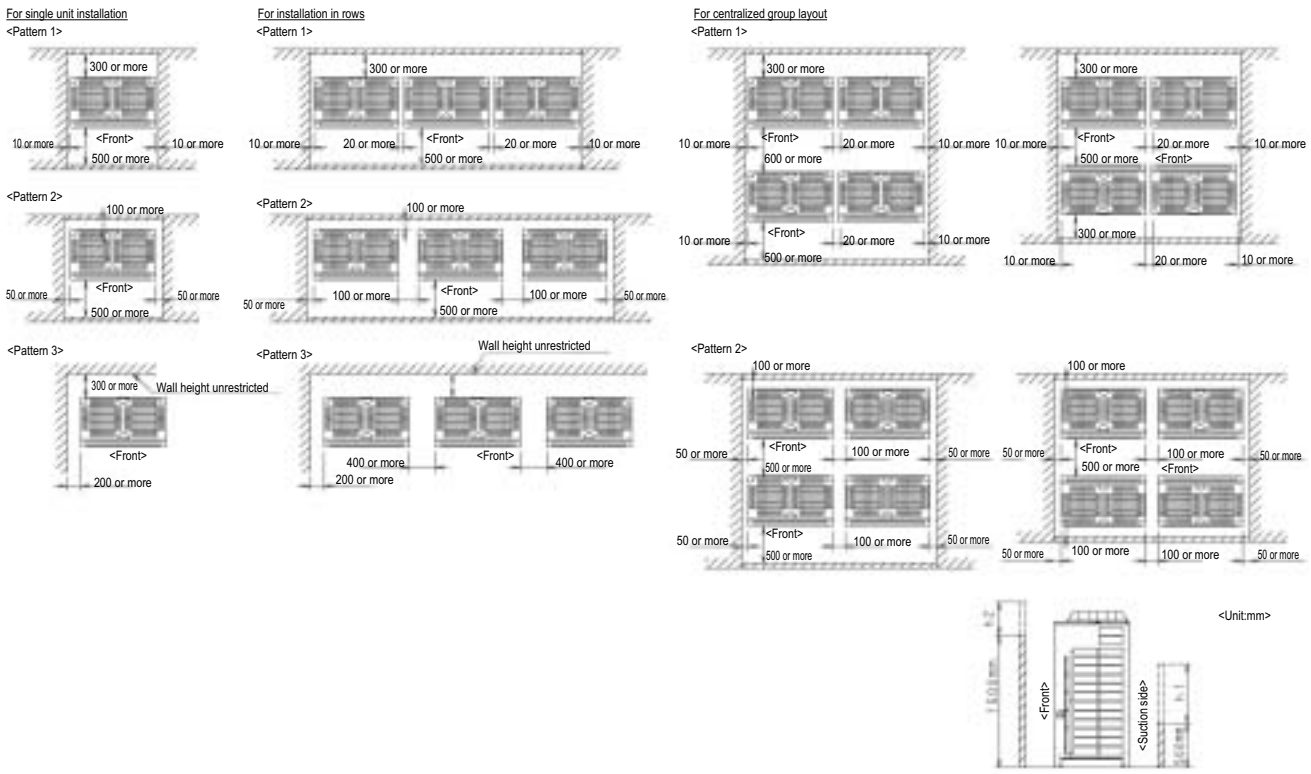

3D051451M

NOTES

1 Height of walls in case of Patterns 1 and 2
Front: 1500mm
Suction side: 500mm
Side: Height unrestricted.
Installation space to be shown in this drawing is based on the cooling operation at 35 degrees outdoor air temperature.
when the design outdoor air temperature exceeds 35 degrees or the load exceeds maximum ability because of much generation load of heat in all outdoor unit, take the suction side space more broadly than the space to be shown in this drawing.

2 If the above wall heights are exceeded then h2/2 and h1/2 should be added to the front and suction side service spaces respectively as shown in the figure on the right.

3 When installing the units most appropriate pattern should be selected from those shown above in order to obtain the best fit in the space available always bearing in mind the need to leave enough space for a person to pass between units and wall and for the air circulate freely.
(If more units are to be installed than are catered for in the above patterns your layout should take account of the possibility of short circuits.)

4 The units should be installed to leave insufficient space at the front for the on site refrigerant piping work to be carried out comfortably.

9 Installation

9 - 2 Fixation and foundation of units

REYQ-P8/P9
REMQ-P8/P9

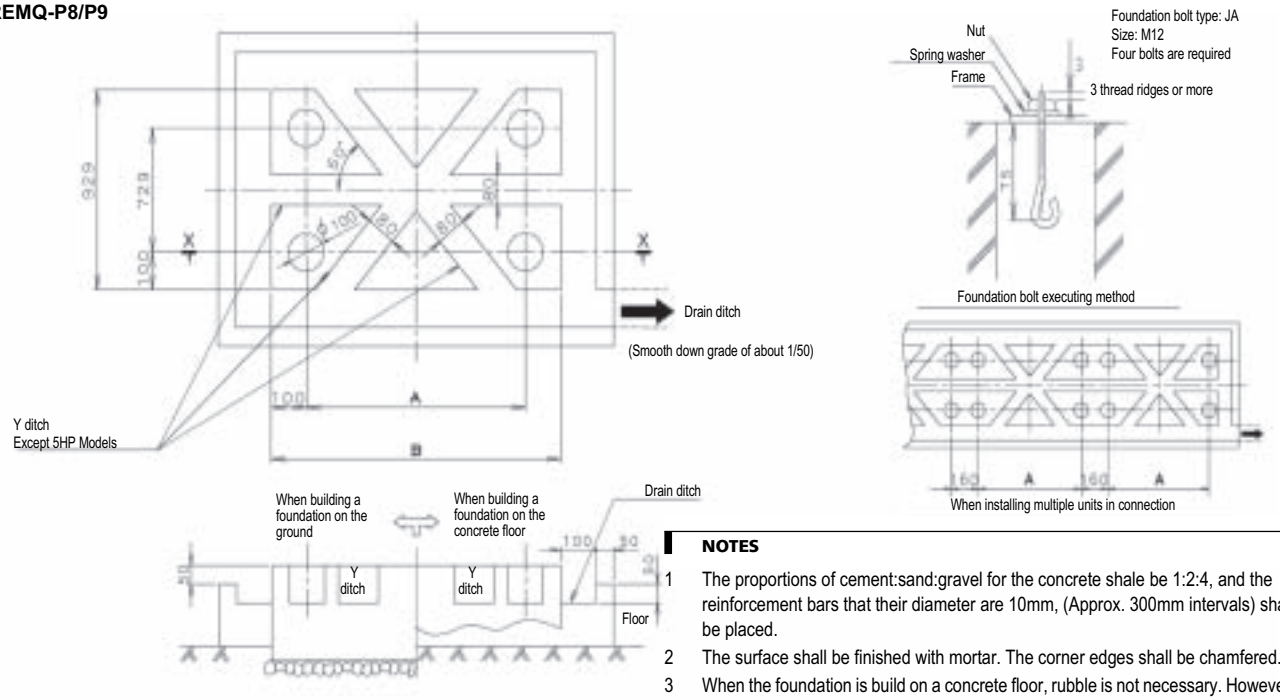

Model	A	B
REMQ10P8	792	992
REMQ8,12P9	792	992
REMQ14,16P8	1102	1302
REYQ8,12P9	1162	1362
REYQ10,14,16P8	1162	1362

NOTES

1 The proportions of cement:sand:gravel for the concrete shale be 1:2:4, and the reinforcement bars that their diameter are 10mm, (Approx. 300mm intervals) shall be placed.
2 The surface shall be finished with mortar. The corner edges shall be chamfered.
3 When the foundation is build on a concrete floor, rubble is not necessary. However, the surface of the section on which the foundation is built shall have rough finish.
4 A drain ditch shall be made around the foundation to thoroughly drain water from the equipment installation area.
5 When installing the equipment on a roof, the floor strength shall be checked, and water-proofing measures shall be taken.
6 Y ditch is not necessary for 5HP models.

3D040102Y

9 Installation

9 - 3 Refrigerant pipe selection

REYQ8,12P9, REYQ10,14,16P8

Example of connection
(Connection of 8 indoor units)

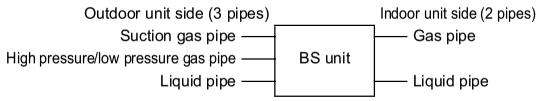

Single outdoor unit system (REYQ8~16)

Branch with refnet joint

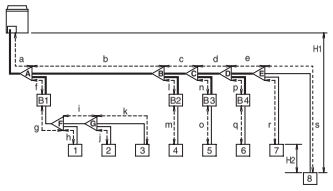

Branch with refnet joint and refnet header

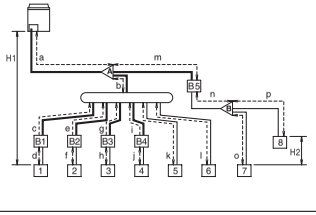

Branch with refnet header

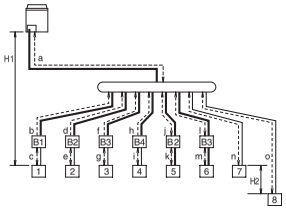

1 indoor unit
refnet joint
refnet header
Outdoor unit side (3 pipes)
Indoor unit side (2 pipes)

Maximum allowable length	Between outdoor and indoor units	Actual pipe length	Pipe length between outdoor and indoor units ≤ 165 m		
			[Example] unit 8: a+b+c+d+e+s ≤ 165 m	[Example] unit 6: a+b+l ≤ 165 m, unit 8: a+m+n+p ≤ 165 m	[Example] unit 8: a+o ≤ 165 m
		Equivalent length	Equivalent pipe length between outdoor and indoor units ≤ 190 m (Assume equivalent pipe length of the refnet joint to be 0.5 m, of the refnet header to be 1.0 m, of the BSVQ100 and BSVQ160 to be 4 m and of the BSVQ250 to be 6 m (for calculation purposes)) (See note 1 on next page)		
		Total extension length	Total piping length from outdoor to all indoor units ≤ 1000 m		
Allowable height difference	Between outdoor and indoor units		Difference in height between outdoor and indoor units (H1) ≤ 50 m (≤ 40 m if outdoor unit is located in a lower position).		
	Between indoor and indoor units		Difference in height between adjacent indoor units (H2) ≤ 15 m		
Allowable length after the branch		Actual pipe length	Pipe length from first refrigerant branch kit (either refnet jointline branch pipe or refnet headerheader branch pipe) to indoor unit ≤ 40 m (See note 2 on next page)		
			[Example] unit 8: b+c+d+e+s ≤ 40 m	[Example] unit 6: b+l ≤ 40 m, unit 8: m+n+p ≤ 40 m	[Example] unit 8: o ≤ 40 m

Refrigerant branch kit selection

Refrigerant branch kits can only be used with R410A.

How to select the refnet joint
When using refnet joints at the first branch counted from the outdoor unit side, choose from the following table in accordance with the capacity of the outdoor unit (example: refnet jointline branch pipe A).

Outdoor unit capacity type (Hp)	Refrigerant branch kit name
8+10	KHRQ23M29T9
12~16	KHRQ23M64T

For refnet joints other than the first branch, select the proper branch kit model based on the total capacity index of all indoor units connected after the refrigerant branch.

Indoor capacity type	Refrigerant branch kit name	
	3 pipes	2 pipes
<200	KHRQ23M20T	KHRQ22M20T
200≤x<290	KHRQ23M29T9	KHRQ22M29T
290≤x<640	KHRQ23M64T	KHRQ22M64T
≥640	KHRQ23M75T	KHRQ22M75T

How to select the refnet header
Choose from the following table in accordance with the total capacity of all the indoor units connected below the refnet header.
Note: 250 type indoor unit can not be connected lower than the refnet header.

Indoor capacity type	Refrigerant branch kit name	
	3 pipes	2 pipes
<200	KHRQ23M29H	KHRQ22M29H
200≤x<290	KHRQ23M29H	KHRQ22M29H
290≤x<640	KHRQ23M64H	KHRQ22M64H
≥640	KHRQ23M75H	KHRQ22M75H

Example of downstream indoor units	[Example] in case of refnet joint C: indoor units 5+6+7+8	[Example] in case of refnet joint B: indoor units 7+8, in case of refnet header: indoor units 1+2+3+4+5+6	[Example] in case of refnet header: indoor units 1+2+3+4+5+6+7+8

9 Installation

9 - 3 Refrigerant pipe selection

REYQ8,12P9,REYQ10,14,16P8

Pipe size selection
For an outdoor unit, select the pipe size in accordance with the following figure.

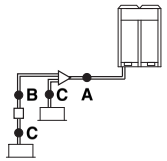

A. Piping between outdoor unit and refrigerant branch kit
Choose from the following table in accordance with the outdoor unit total capacity type, connected downstream.

Outdoor unit capacity type (Hp)	Piping outer diameter size (mm)		
	Suction gas pipe	HP/LP gas pipe	Liquid pipe
8	19.1	15.9	9.5
10	22.2	19.1	9.5
12	28.6	19.1	12.7
14+16	28.6	22.2	12.7

C. Piping between refrigerant branch kit or BS unit and indoor unit
Choose from the following table in accordance with the capacity type of the connected indoor unit.

Indoor unit capacity type	Piping outer diameter size (mm)	
	Suction gas pipe	Liquid pipe
20, 25, 32, 40, 50	12.7	6.4
63, 80, 100, 125	15.9	9.5
200	19.1	9.5
250	22.2	9.5

B. Piping between refrigerant branch kit and BS unit
Pipe size for direct connection to indoor unit must be the same as the connection size of indoor unit.
Choose from the following table in accordance with the indoor unit total capacity type, connected downstream.

Indoor unit capacity type	Piping outer diameter size (mm)		
	Suction gas pipe	HP/LP gas pipe	Liquid pipe
< 150	15.9	12.7	9.5
150 ≤ x < 200	19.1	15.9	9.5
200 ≤ x < 290	22.2	19.1	9.5
290 ≤ x < 420	28.6	19.1	12.7
420 ≤ x < 640	28.6	28.6	15.9
640 ≤ x < 920	34.9	28.6	19.1
≥920	41.3	28.6	19.1

How to calculate the additional refrigerant to be charged
Additional refrigerant to be charged R (kg)
R should be rounded off in units of 0.1 kg

$$\mathbf{R} = \left[\begin{array}{l}[(X_1 \times \mathbf{Ø22.2})\ x0.37] + [(X_2 \times \mathbf{Ø19.1})\ x0.26] + [(X_3 \times \mathbf{Ø15.9})\ x0.18] + \\ [(X_4 \times \mathbf{Ø12.7})\ x0.12] + [(X_5 \times \mathbf{Ø9.5})\ x0.059] + [(X_6 \times \mathbf{Ø6.4})\ x0.022]\end{array}\right] \times 1.02 + 3.6 + \mathbf{A}$$

A	
>100% ≤130%	0.5 kg

$X_{1..6}$ = Total length (m) of liquid piping size at **Øa**
A = Weight according to table A in function of indoor unit connection ratio

Note 1

When the equivalent pipe length between outdoor and indoor units is 90 m or more, the size of the main liquid pipe must be increased. Never increase suction gas pipe and HP/LP gas pipe sizes.
Depending on the length of the piping, the capacity may drop, but even in such a case it is possible to increase the size of the main liquid pipe.

REYQ	Ø
8+10	9.5 → 12.7
12~16	12.7 → 15.9

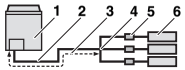

1 Outdoor unit
2 Main pipes
3 Increase only liquid pipe size
4 First refrigerant branch kit
5 BS unit
6 Indoor unit

Note 2

Allowable length after the first refrigerant branch kit to indoor units is 40 m or less, however it can be extended up to 90 m if all the following conditions are fulfilled.

Required conditions	Example drawings	
It is necessary to increase the pipe size of the liquid and suction gas pipe if the pipe length between the first and the final branch kit is over 40 m (reducers must be procured on site). Increasing the HP/LP gas pipe size is not allowed. ■ If the increased liquid pipe size is larger than the pipe size of the main liquid pipe, then the pipe size of the main liquid pipe needs to be increased as well. ■ If the increased suction gas pipe size is larger than the pipe size of the main suction gas pipe, then the allowable length after the first refrigerant branch kit may not be increased to 90 m. Size-up of the main suction gas pipe may affect a good oil return to the outdoor unit due to influence of the HP/LP gas pipe.	indoor unit **8**: b+c+d+e+f+g+p≤90 m increase the pipe size of b, c, d, e, f, g	Increase the pipe size as follows Ø9.5 → Ø12.7 Ø12.7 → Ø15.9 Ø15.9 → Ø19.1 Ø19.1 → Ø22.2
For calculation of total extension length, the actual length of above pipes must be doubled (except length of main pipes and of pipes which do not have an increased pipe size).	a+b*2+c*2+d*2+e*2+f*2+g*2 +h+i+j+k+l+m+n+p≤1000 m	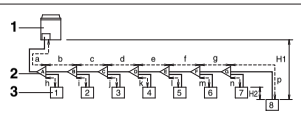
Indoor unit to the nearest branch kit ≤ 40 m	h, i, j.....p ≤ 40 m	
The difference between the distance of the outdoor unit to the farthest indoor unit and the distance of the outdoor unit to the nearest indoor unit ≤ 40 m	The most remote indoor unit **8** The nearest indoor unit **1** (a+b+c+d+e+f+g+p)–(a+h) ≤ 40 m	

1 Outdoor unit
2 Refnet joints (a~g)
3 Indoor units (1~8)

9 Installation

9 - 3 Refrigerant pipe selection

REYQ18-48P8/9
REYHQ-P

Example of connection (Connection of 8 indoor units)			**Branch with refnet joint**	**Branch with refnet joint and refnet header**	**Branch with refnet header**
Use the outdoor unit multi connection piping kit that is sold separately as an option (BHFQ23P907+1357) for the multi installation of outdoor units. Selection method is as shown in the right table. Outdoor unit side (3 pipes): Suction gas pipe, HP/LP gas pipe, Liquid pipe — BS unit — Indoor unit side (2 pipes): Gas pipe, Liquid pipe		Outdoor units installed in a multiple outdoor unit system (REYQ18~48 + REYHQ16 + REYHQ20~24)	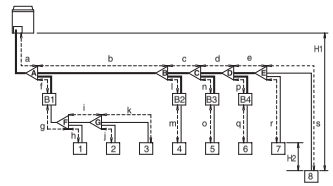	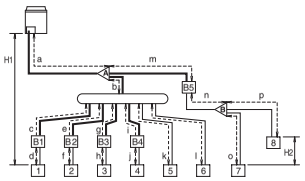	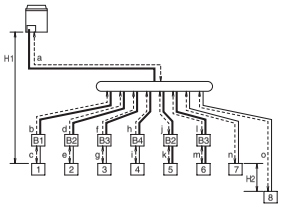
Install the joint part (◀ part in the figure) of the outdoor unit multi connection piping kit horizontally with attention to the installation restrictions described in "connecting the refrigerant piping". (*) In case of multi combination, interprete the word "outdoor" as "first outdoor branch".			1 indoor unit; refnet joint	refnet header; ◀ outdoor multi connection piping kit	Outdoor unit side (3 pipes); Indoor unit side (2 pipes)
Maximum allowable length	Between outdoor and indoor units	Actual pipe length	Pipe length between outdoor(*) and indoor units ≤ 165 m		
			[Example] unit 8: a+b+c+d+e+s ≤ 165 m	[Example] unit 6: a+b+l ≤ 165 m, unit 8: a+m+n+p ≤ 165 m	[Example] unit 8: a+o ≤ 165 m
		Equivalent length	Equivalent pipe length between outdoor(*) and indoor units ≤ 190 m (Assume equivalent pipe length of the refnet joint to be 0.5 m, of the refnet header to be 1.0 m, of the BSVQ100 and BSVQ160 to be 4 m and of the BSVQ250 to be 6 m (for calculation purposes)) (See note 1)		
		Total extension length	Total piping length from outdoor(*) to all indoor units ≤ 1000 m		
	Between the first outdoor unit multi connection piping kit and outdoor unit (in case of a multiple outdoor unit system)	Actual and equivalent pipe length	The actual pipe length from the first outdoor unit multi connection piping kit to the outdoor unit 10 m. (x≤10 m, y≤10 m, z≤10 m) The equivalent pipe length from the first outdoor unit multi connection piping kit to the outdoor unit 13 m. (x≤13 m, y≤13 m, z≤13 m)		
Allowable height difference	Between outdoor and indoor units		Difference in height between outdoor and indoor units (H1)≤50 m (≤40 m if outdoor unit is located in a lower position).		
	Between indoor and indoor units		Difference in height between adjacent indoor units (H2)≤15 m		
	Between outdoor and outdoor units		Difference in height between adjacent outdoor units (H3)≤5 m		
Allowable length after the branch		Actual pipe length	Pipe length from first refrigerant branch kit (either refnet joint or refnet header) to indoor unit ≤40 m (See note 2)		
			[Example] unit 8: b+c+d+e+s ≤ 40 m	[Example] unit 6: b+l≤40 m, unit 8: m+n+p≤40 m	[Example] unit 8: o ≤ 40 m
Example of downstream indoor units			[Example] in case of refnet joint C: indoor units 5+6+7+8	[Example] in case of refnet joint B: indoor units 7+8, in case of refnet header: indoor units 1+2+3+4+5+6	[Example] in case of refnet header: indoor units 1+2+3+4+5+6+7+8

Outdoor unit multi connection piping kit and refrigerant branch kit selection

Refrigerant branch kits can only be used with R410A.

How to select the refnet joint

When using refnet joints at the first branch counted from the outdoor unit side, choose from the following table in accordance with the capacity of the outdoor unit (example: refnet joint A).

Outdoor unit capacity type (Hp)	Refrigerant branch kit name
8+10	KHRQ23M29T
12~22	KHRQ23M64T
≥ 24	KHRQ23M75T

For refnet joints other than the first branch, select the proper branch kit model based on the total capacity index of all indoor units connected after the refrigerant branch.

Indoor capacity type	Refrigerant branch kit name	
	3 pipes	2 pipes
< 200	KHRQ23M20T	KHRQ22M20T
200 ≤ x < 290	KHRQ23M29T9	KHRQ22M29T
290 ≤ x < 640	KHRQ23M64T	KHRQ22M64T
≥ 640	KHRQ23M75T	KHRQ22M75T

How to select the refnet header

Choose from the following table in accordance with the total capacity of all the indoor units connected below the refnet header.

Note: 250 type indoor unit can not be connected lower than the refnet headerheader branch pipe.

Indoor capacity type	Refrigerant branch kit name	
	3 pipes	2 pipes
< 200	KHRQ23M29H	KHRQ22M29H
200 ≤ x < 290	KHRQ23M29H	KHRQ22M29H
290 ≤ x < 640	KHRQ23M64H	KHRQ22M64H
≥640	KHRQ23M75H	KHRQ22M75H

How to choose an outdoor multi connection piping kit (this is required when the system is a multiple outdoor unit system)

Choose from the following table in accordance with the number of outdoor units

Number of outdoor units	Branch kit name
2	BHFQ23P907
3	BHFQ23P1357

9 Installation

9 - 3 Refrigerant pipe selection

REYQ18-48P819
REYHQ-P

Pipe size selection
For an outdoor unit multi installation (REYQ18~48 + REYHQ16~24), select the pipe size in accordance with the following figure.

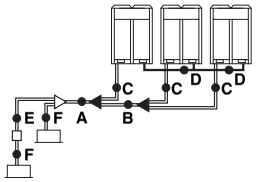

A. Piping between outdoor unit and refrigerant branch kit
B. Piping between outdoor unit multi connection piping units
Choose from the following table in accordance with the outdoor unit total capacity type, connected downstream.

Outdoor unit capacity type (Hp)	Piping outer diameter size (mm)		
	Suction gas pipe	HP/LP gas pipe	Liquid pipe
8	19.1	15.9	9.5
10	22.2	19.1	9.5
12	28.6	19.1	12.7
14+16	28.6	22.2	12.7
18	28.6	22.2	15.9
20+22	28.6	28.6	15.9
24	34.9	28.6	15.9
26~34	34.9	28.6	19.1
36	41.3	28.6	19.1
38~48	41.3	34.9	19.1

C. Piping between outdoor unit multi connection piping kit and outdoor unit
Choose from the following table in accordance with the capacity type of the connected outdoor unit.

Outdoor unit capacity type (Hp)	Piping outer diameter size (mm)		
	Suction gas pipe	HP/LP gas pipe	Liquid pipe
8+10	22.2	19.1	9.5
12	28.6	19.1	12.7
14+16	28.6	22.2	12.7

E. Piping between refrigerant branch kit and BSHR unit
Pipe size for direct connection to indoor unit must be the same as the connection size of indoor unit. Choose from the following table in accordance with the indoor unit total capacity type, connected downstream.

Indoor unit capacity type	Piping outer diameter size (mm)		
	Suction gas pipe	HP/LP gas pipe	Liquid pipe
<150			
150 ≤ x < 200	19.1	15.9	9.5
200 ≤ x < 290	22.2	19.1	9.5
290 ≤ x < 420	28.6	19.1	12.7
420 ≤ x < 640	28.6	28.6	15.9
640 ≤ x < 920	34.9	28.6	19.1
≥920	41.3	28.6	19.1

F. Piping between refrigerant branch kit or BSHR unit and indoor unit
Choose from the following table in accordance with the capacity type of the connected indoor unit.

Indoor unit capacity type	Piping outer diameter size (mm)	
	Suction gas pipe	Liquid pipe
20, 25, 32, 40, 50	12.7	6.4
63, 80, 100, 125	15.9	9.5
200	19.1	9.5
250	22.2	9.5

D. Equalizer piping (outdoor units only)

Piping outer diameter size (mm)	19.1

How to calculate the additional refrigerant to be charged
Additional refrigerant to be charged R (kg)
R should be rounded off in units of 0.1 kg

The refrigerant charge of the system must be less than 100 kg. This means that in case the calculated refrigerant charge is equal to or more than 95 kg you must divide your multiple outdoor system into smaller independent systems, each containing less than 95 kg refrigerant charge.
For factory charge, refer to the unit name plate.

$$R = \left[\begin{array}{l} [(X_1 \times \mathbf{Ø22.2}) \times 0.37] + [(X_2 \times \mathbf{Ø19.1}) \times 0.26] + \\ [(X_3 \times \mathbf{Ø15.9}) \times 0.18] + [(X_4 \times \mathbf{Ø12.7}) \times 0.12] + \\ [(X_5 \times \mathbf{Ø9.5}) \times 0.059] + [(X_6 \times \mathbf{Ø6.4}) \times 0.022] \end{array} \right] \times 1.02 + \mathbf{A} + \mathbf{B}$$

$X_{1..6}$ = Total length (m) of liquid piping size at **Øa**
A = Weight according to table A
B = Weight according to table B in function of indoor unit connection ratio

REYQ	A
18+20 Hp	**1.0** kg
22+24 Hp	**1.5** kg
26 Hp	**2.0** kg
28+30 Hp	**2.5** kg
32~40 Hp	**3.0** kg
42 Hp	**3.5** kg
44+46 Hp	**4.0** kg
48 Hp	**4.5** kg

REYHQ	A
16 Hp	**1.0** kg
20 Hp	**1.5** kg
22+24 Hp	**2.0** kg

REY(H)Q		B
16~32 Hp	> 100% ≤ 130%	**0.5** kg
34~48 Hp	> 100% ≤ 120%	**0.5** kg
	> 120% ≤ 130%	**1.0** kg

Example for refrigerant branch using refnet jointline branch pipe and refnet headerheader branch pipe for REYQ34. REYQ34 = REMQ8+REMQ10+REMQ16, the indoor unit connection ratio = 120% and the piping lengths are as below.

a : Ø19.1x30 m	f : Ø9.5x10 m	k : Ø9.5x20 m	p : Ø6.4x10 m
b : Ø19.1x20 m	g : Ø9.5x10 m	l : Ø9.5x20 m	r : 12.7x3 m
c : Ø9.5x10 m	h : Ø9.5x10 m	m: Ø9.5x20 m	s : Ø9.5x3 m
d : Ø9.5x10 m	i : Ø9.5x10 m	n : Ø9.5x10 m	t : Ø9.5x3 m
e : Ø9.5x10 m	j : Ø9.5x10 m	o : Ø6.4x10 m	u : Ø15.9x1 m

R = [[50x0.26]+[1x0.18]+[3x0.12]+[156x0.059]+[20x0.022]]x1.02+**3.0+0.5**
= 27.148 → **R = 27.1 kg**

Note 1

When the equivalent pipe length between outdoor and indoor units is 90 m or more, the size of the main liquid pipe must be increased. Never increase suction gas pipe and HP/LP gas pipe sizes.
Depending on the length of the piping, the capacity may drop, but even in such a case it is possible to increase the size of the main liquid pipe.

REY(H)Q	Ø	REY(H)Q	Ø
8+10	9.5 → 12.7	18~24	15.9 → 19.1
12~16	12.7 → 15.9	26~48	19.1 → 22.2

XPQ	Ø	XPQ	Ø
8+10	9.5 → 12.7	18~24	15.9 → 19.1
12~16	12.7 → 15.9	26~48	19.1 → 22.2

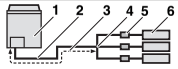

1 Outdoor unit
2 Main pipes
3 Increase only liquid pipe size
4 First refrigerant branch kit
5 Indoor
6 Indoor unit

Note 2

Allowable length after the first refrigerant branch kit to indoorunits is 40 m or less, however it can be extended up to 90 m ifall the following conditions are fulfilled.

Required conditions	Example drawings	
It is necessary to increase the pipe size of the liquid and suction gas pipe if the pipe length between the first and the final branch kit is over 40 m (reducers must be procured on site). Increasing the HP/LP gas pipe size is not allowed. ■ If the increased liquid pipe size is larger than the pipe size of the main liquid pipe, then the pipe size of the main liquid pipe needs to be increased as well. ■ If the increased suction gas pipe size is larger than the pipe size of the main suction gas pipe, then the allowable length after the first refrigerant branch kit may not be increased to 90 m. Size-up of the main suction gas pipe may affect a good oil return to the outdoor unit due to influence of the HP/LP gas pipe.	indoor unit **8**: b+c+d+e+f+g+p≤90 m increase the pipe size of b, c, d, e, f, g	Increase the pipe size as follows Ø9.5 → Ø12.7 Ø12.7 → Ø15.9 Ø15.9 → Ø19.1 Ø19.1 → Ø22.2
For calculation of total extension length, the actual length of above pipes must be doubled (except length of main pipes and of pipes which do not have an increased pipe size).	a+b*2+c*2+d*2+e*2+f*2+g*2 +h+i+j+k+l+m+n+p≤1000 m	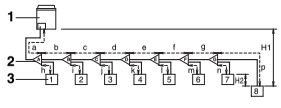
Indoor unit to the nearest branch kit ≤40 m	h, i, j..... p≤40 m	
The difference between the distance of the outdoor unit to the farthest indoor unit and the distance of the outdoor unit to the nearest indoor unit ≤ 40 m	The most remote indoor unit **8** The nearest indoor unit **1** (a+b+c+d+e+f+g+p)–(a+h)≤40 m	

1 Outdoor unit
2 Refnet joints(a~g)
3 Indoor units (1~8)

10 Operation range

REYQ-P8 / P9
REMQ-P8 / P9

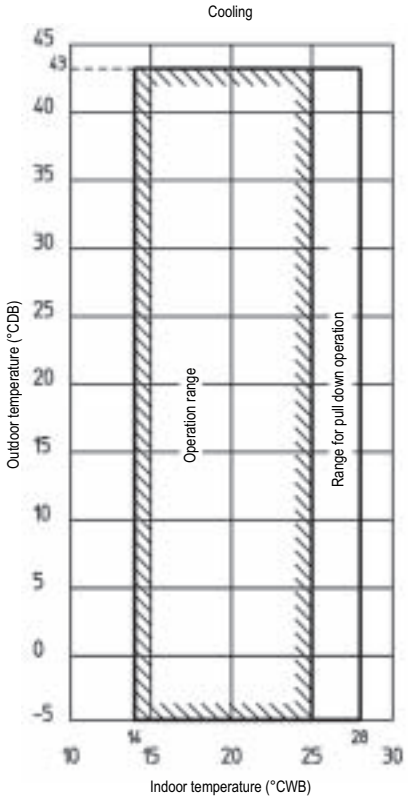

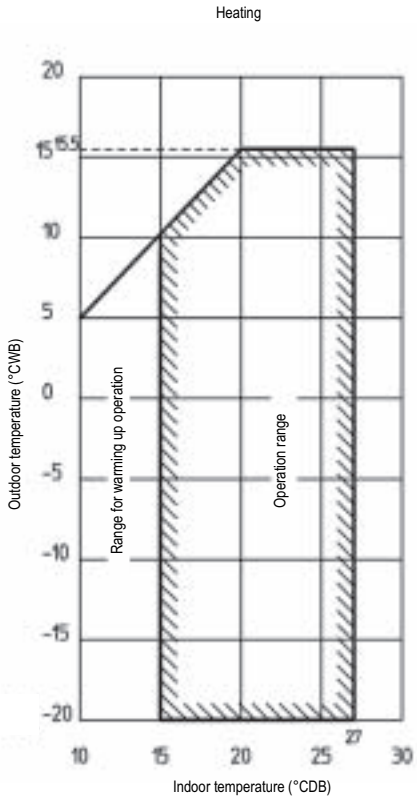

NOTES

1. These figures assume the following operation conditions:
   Indoor and outdoor units:
   Equivalent pipe length: 7.5m
   Level difference: 0m
2. Depending on operation and installation conditions, the indoor unit can change over to freeze-up operation (indoor de-icing).
3. To reduce the freeze-up operation (indoor de-icing) frequency it is recommended to install the outdoor unit in a location not exposed to wind.

3D039566P / 4TW25797-3C

1
10

In all of us,
a green heart

Daikin's unique position as a manufacturer of air conditioning equipment, compressors and refrigerants has led to its close involvement in environmental issues. For several years Daikin has had the intension to become a leader in the provision of products that have limited impact on the environment. This challenge demands the eco design and development of a wide range of products and an energy management system, resulting in energy conservation and a reduction of waste.

Daikin Europe N.V. is approved by LRQA for its Quality Management System in accordance with the ISO9001 standard. ISO9001 pertains to quality assurance regarding design, development, manufacturing as well as to services related to the product.

ISO14001 assures an effective environmental management system in order to help protect human health and the environment from the potential impact of our activities, products and services and to assist in maintaining and improving the quality of the environment.

Daikin units comply with the European regulations that guarantee the safety of the product.

VRV® products are not within the scope of the Eurovent certification programme.

The present publication is drawn up by way of information only and does not constitute an offer binding upon Daikin Europe N.V.. Daikin Europe N.V. has compiled the content of this publication to the best of its knowledge. No express or implied warranty is given for the completeness, accuracy, reliability or fitness for particular purpose of its content and the products and services presented therein. Specifications are subject to change without prior notice. Daikin Europe N.V. explicitly rejects any liability for any direct or indirect damage, in the broadest sense, arising from or related to the use and/or interpretation of this publication. All content is copyrighted by Daikin Europe N.V..

DAIKIN EUROPE N.V.

Naamloze Vennootschap
Zandvoordestraat 300
B-8400 Oostende, Belgium
www.daikin.eu
BTW: BE 0412 120 336
RPR Oostende

Prepared in Belgium by Lannoo (www.lannooprint.be), a company whose concern for the environment is set in the EMAS and ISO 14001 systems.
Responsible Editor: Daikin Europe N.V., Zandvoordestraat 300, B- 8400 Oostende