MULTI AIR CONDITIONER

INDOOR UNIT	OUTDOOR UNIT
MH023/026/035/052FBEA	RJ040F2HXEA
MH020/026/035/052FVEA	RJ050F2HXEA
MH020/026/035/052FAEA	RJ060F3HXEA
MH020/026/035/052FNEA	RJ070F4HXEA
AQV07/09/12/18/24PSBN	RJ080F4HXEA
AQV09/12/18YWAN	
MH026/035/052FJEA	
MH026/035FSEA	
MH030/035/052FMEA	
NJ026/035LHXEA	
MH052FUEA	

SERVICE Manual

AIR CONDITIONER

CONTENTS

1. Precautions
2. Product Specifications
3. Disassembly and Reassembly
4. Troubleshooting
5. Exploded Views and Parts List
6. PCB Diagram and Parts List
7. Wiring Diagram
8. Schematic Diagram
9. Reference Sheet

Refer to the service manual in the GSPN(see the rear cover) for the more information.

Contents

1. Precautions **1-1**

1-1 Installing the air conditioner 1-1

1-2 Power supply and circuit breaker 1-1

1-3 During operation 1-2

1-4 Disposing of the unit 1-2

1-5 Others 1-2

2. Product Specifications **2-1**

2-1 The Feature of Product 2-1

2-2 Product Specifications 2-2

2-3 The Comparative Specifications of Product 2-14

2-4 Accessory and Option Specifications 2-22

3. Disassembly and Reassembly **3-1**

3-1 Outdoor Unit 3-2

4. Trouble shooting **4-1**

4-1 Display Error and Check Method 4-1

4-2 Setting Option Setup Method 4-8

4-3 Items to be checked first 4-17

4-4 Checking and Testing operation 4-18

4-5 Fault Diagnosis by Symptom 4-28

4-6 PCB Inspection Method 4-33

5. Exploded Views and Parts List **5-1**

5-1 Indoor Unit 5-1

5-2 Outdoor Unit 5-33

5-3 Assy control out 5-37

6. PCB Diagram and Parts list **6-1**

6-1 Indoor Unit 6-1

6-2 Outdoor Unit 6-12

7. Wiring Diagram **7-1**

7-1 Indoor Unit 7-1

7-2 Outdoor Unit 7-11

8. Schematic Diagram **8-1**

8-1 Indoor Unit 8-1

8-2 Outdoor Unit 8-10

9. Reference Sheet **9-1**

1. Precautions

1-1 Installing the air conditioner

- Users should not install the air conditioner by themselves.
  Ask the dealer or authorized company to install the air conditioner except the window-type air conditioner in U.S.A and Canada.
- If you don't install the air conditioner properly, it may cause a fire, a water leakage or an electric shock.
- You must install the air conditioner according to the national wiring regulations and safety regulations.
- Install the indoor unit higher than 2.5m from the floor to avoid the injury caused by the operation of the fan. (except the window-type air conditioner)
- The manufacturer is not responsible for any accidents or injury caused by an incorrect installation.
  When installing the built-in type air conditioner, keep all electric cables such as the power cable and the connection cord in pipes, ducts, or cable channels to protect them from the danger of impact or any other incidents.
- More than 2 indoor units should be installed when you use Free Joint Multi air conditioner.
- RJ060F3HXEA/RJ070F4HXEA
  - **024** indoor units cannot be connected.
  RJ050F2HXEA
  - **024**/MH052FMEA/MH052FUEA indoor units cannot be connected.
  RJ040F2HXEA
  - **052**/MH***FM*A/NJ***LHXEA/**18**/**24** indoor unites cannot be connected.

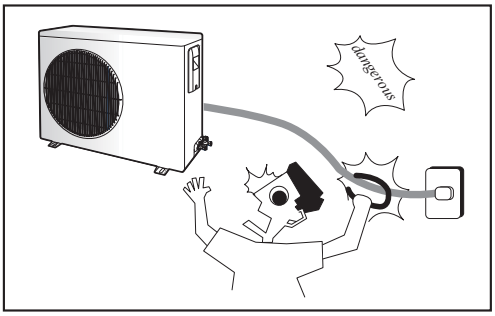

Avoid Dangerous Contact

1-2 Power supply and circuit breaker

- If the power cord of the air conditioner is damaged, it must be replaced by the manufacturer or a qualified person in order to avoid a hazard.
- The air conditioner must be plugged into an independent circuit if applicable or connect the power cable to the auxiliary circuit breaker.
  An all pole disconnection from the power supply must be incorporated in the fixed wiring with a contact opening of >3mm.
- Do not extend an electric cord to the air conditioner.
- The air conditioner must be plugged in after you complete the installation.

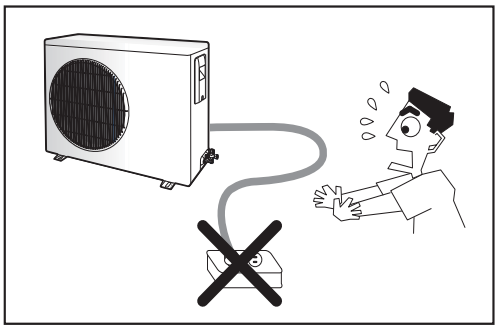

No Tapping and No Extension Cords

1-3 During operation

- Do not repair the air conditioner at your discretion.
  It is recommended to contact a service center directly.
- Never spill any kind of liquid on the air conditioner.
  If this happens, turn off the air conditioner and contact an authorized service center.
- Do not insert anything between the airflow blades to prevent damage of the inner fan and consequent injury. Keep children away from the air conditioner.
- Do not place any obstacles in front of the air conditioner.
- Do not spray any kind of liquid into the indoor unit. If this happens, turn off the air conditioner and contact a service center.
- Make sure that the air conditioner is well ventilated at all times:
  Do not place a cloth or other materials over it.
- Remove the batteries if you don't use the remote control for a long time. (If applicable)
- Use the remote control within 7 meters from the indoor unit. (If applicable)

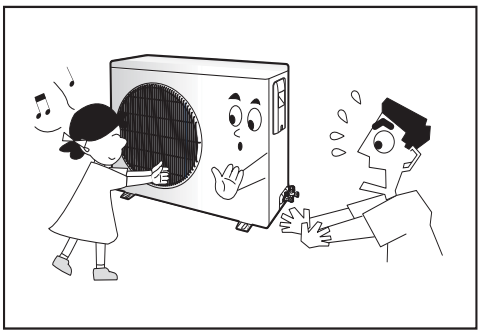

No children Nearby

1-4 Disposing of the unit

- Before throwing out the air conditioner, remove the batteries from the remote control.
- When you dispose of the air conditioner, consult your dealer. If pipes are removed incorrectly, refrigerant may blow out and cause air pollution. When it contacts with your skin, it can cause skin injury.
- The package of the air conditioner should be recycled or disposed of properly for environmental reasons.

1-5 Others

- Never store or load the air conditioner upside down or sideways to prevent the damage to the compressor.
- Young children or infirm persons should be always supervised when they use the air conditioner.
- Max current is measured according to IEC standard for safety.
- Current is measured according to ISO standard for energy efficiency.
- When installing, make sure there is no leakage. When recovering the refrigerant, ground the compressor first before removingthe connection pipe. If the refrigerant pipe is not properly connected and the compressor works with the service valve open, thepipe inhales the air and it makes the pressure inside of the refrigerant cycle abnormally high. It may cause explosion and injury.
- Pump Down Procedure (When removing the product)
  - Turn on the air conditioner and select Cool mode to run the compressor for 3 minutes.
  - Release the valve caps on High and Low pressure side.
  - Use Lwrench to close the valve on the high pressure side.
  - Approximately 2 minutes after, close the valve on the low pressure side.
  - Stop operation of the air conditioner.- Disconnect the pipes.

2. Product Specifications

2-1 The Feature of Product

■ **Multi Inverter(Free Joint Multi) Series delivers comfort to 2~4 rooms with a Single Outdoor Unit.**

■ **Inverter for High Efficiency Operation.**

Thanks to inverter control, efficiency of operation of the outdoor unit is enhanced depending on the number of indoor units operated and the temperature setting.

When only one indoor unit is used, power is saved, resulting in a smaller electricity bill. When all indoor units are used, high-power operation achieves comfort quickly in all rooms.

■ **Installation of indoor units on different floors is possible.**

■ **Characteristics**

•Using electronic expansion valve control

•Good Sleep Mode(MH***FNEA/MH***FVEA/MH***FBEA/MH***FAEA/AQV**PSBN/AQV***YWAN) : Good Sleep Mode can helpyou sleep quickly ,soundly and make up refreshed.

•MPI Mode(MH***FNEA/MH***FVEA/MH***FBEA/MH***FAEA) : The Micro Plasma Ion Mode created strong purified zone in your room.

•SPI Mode(AQV***YWAN):The Super Plasma Ion Mode generates hydrogen(H) and oxygen(O_2) to remove a polluted substance and decomposition of such harmful particles. It makes you breathe better as if you are staying around waterfalls,ocean surf, rivers and mountains

■ **Various Indoor units & combinations**

- Neo Forte
- MB• Vivace
- Mini 4 way cassette
- MSP duct
- Slim duct
- Console
- Slim 1 way cassette
- Vivaldi
- Maldives
- Jungfrau

■ **Convenient Installation**

Auto addressing option : Automated checking of pipe connection.(Refer to the installation manual for detail)

■ **Space saving & Environmental Friendly**

- Compact & light outdoor unit
- Slim and quiet indoor units
- Pipe size reduction
- Ozone friendly Refrigerant(R410A)
- Lead Free controller.

■ **Reliability**

- Installation possibilities(Length/Height)
- Convenient installation(485 non polarity/auto-addressing)
- Intelligent control/network
- Easy checking system condition by 7-segment

■ **Smart & Low Noise outdoor units in any condition**

- TBR/Sine-Wave Controller/Noise Reduction Control/Dual Felt etc.
- Felt Structure : New felt has selected to reduce the noise coming out of the compressor.
  Double layered felt structure absorbs noise by two times and felt is also covering top of the compressor to reduce the noise even more.

2-2 Product Specifications

Item					Model	MH020FNEA	MH026FNEA	MH035FNEA	MH052FNEA
						INDOOR UNIT			
Type						Wall-mounted	Wall-mounted	Wall-mounted	Wall-mounted
Perfor-mance	Cooling				kW	2.00	2.60	3.50	5.20
	Heating				kW	2.20	2.90	3.80	5.60
	Dehumidifying				ℓ/h	-	-	-	-
	Air Volume	Cooling			m^3/min	7.73	8.31	9.54	13.21
		Heating			m^3/min	8.00	8.56	9.93	14.22
	Noise	Cooling			dB(A)	32	32	36	40
		Heating			dB(A)	32	32	36	40
	Power				ø,V,Hz	1,220~240,50	1,220~240,50	1,220~240,50	1,220~240,50
Power	Power Consumption	Cooling			W	30	30	35	50
		Heating			W	30	30	35	50
	Operating Current	Cooling			A	0.18	0.18	0.19	0.30
		Heating			A	0.18	0.18	0.19	0.30
Size	Outer Dimension	WxHxD			mm	825x285x189	825x285x189	825x285x189	1,099x315x217
					inch	32.5x11.2x7.4	32.5x11.2x7.4	32.5x11.2x7.4	43.3x12.4x8.5
	Weight				kg	7.8	7.8	7.8	13
	Refrigerant Pipe	Liquid			mmxL(m)	ø6.35x7.5	ø6.35x7.5	ø6.35x7.5	ø6.35x7.5
		Gas			mmxL(m)	ø9.52x7.5	ø9.52x7.5	ø9.52x7.5	ø12.7x7.5
	Drain Hose				ø,mm	ø18, 535	ø18, 535	ø18, 535	ø18, 600
	Blower	Type				Cross Flow Fan	Cross Flow Fan	Cross Flow Fan	Cross Flow Fan
		Motor	Type			Resin/steel	Resin/steel	Resin/steel	Resin/steel
			Rated Output		W	-	-	-	-
Heat Exchanger						2ROW 10STEP	2ROW 14STEP	2ROW 14STEP	2ROW 16STEP
Refrigerant Control Unit						EEV	EEV	EEV	EEV

Product Specifications(cont.)

Item \ Model					MH023FBEA MH026FBEA	MH035FBEA	MH052FBEA
					INDOOR UNIT		
Type					Wall-mounted	Wall-mounted	Wall-mounted
Perfor-mance	Cooling			kW	2.60	3.50	5.20
	Heating				2.90	3.80	5.60
	Dehumidifying			ℓ /h	-	-	2.5
	Air Volume	Cooling		m^3/min	8.14	9.16	14.98
		Heating			8.23	9.46	14.49
	Noise	Cooling		dB(A)	31	35	40
		Heating			31	35	40
	Power			ø,V,Hz	1,220~240,50	1,220~240,50	1,220~240,50
Power	Power Consumption	Cooling		W	30	35	50
		Heating			30	35	50
	Operating Current	Cooling		A	0.18	0.19	0.30
		Heating			0.18	0.19	0.30
Size	Outer Dimension	WxHxD		mm	900x304x185	900x304x185	1,100x307x225
				inch	35.4x12.0x7.3	35.4x12.0x7.3	43.3x12.1x8.9
	Weight			kg	10.2	10.2	13.0
	Refrigerant Pipe	Liquid		mmxL(m)	ø6.35x7.5	ø6.35x7.5	ø6.35x7.5
		Gas		mmxL(m)	ø9.52x7.5	ø9.52x7.5	ø12.7x7.5
	Drain Hose			ø,mm	ø18, 550	ø18, 550	ø18, 920
	Type				Cross Flow Fan	Cross Flow Fan	Cross Flow Fan
	Blower	Motor	Type		Resin/steel	Resin/steel	Resin/steel
			Rated Output	W	15	15	15
Heat Exchanger					2ROW 14STEP	2ROW 14STEP	2ROW 16STEP
Refrigerant Control Unit					EEV	EEV	EEV

Product Specifications(cont.)

Item \ Model					MH020FVEA	MH026FVEA	MH035FVEA	MH052FVEA
					INDOOR UNIT			
Type					Wall-mounted	Wall-mounted	Wall-mounted	Wall-mounted
Perfor-mance	Cooling			kW	2.00	2.60	3.50	5.20
	Heating				2.20	2.90	3.80	5.60
	Dehumidifying			ℓ /h	1.0	1.0	1.3	1.9
	Air Volume	Cooling		m^3/min	7.5	8.5	10.0	14.8
		Heating			8.1	8.3	10.4	14.8
	Noise	Cooling		dB(A)	31	31	35	40
		Heating			31	31	35	40
	Power			ø,V,Hz	1,220~240,50	1,220~240,50	1,220~240,50	1,220~240,50
Power	Power Consumption	Cooling		W	30	30	35	50
		Heating			30	30	35	50
	Operating Current	Cooling		A	0.18	0.18	0.19	0.30
		Heating			0.18	0.18	0.19	0.30
Size	Outer Dimension	WxHxD		mm	825x285x189	825x285x189	825x285x189	1,065x298x214
				inch	32.5x11.2x7.4	32.5x11.2x7.4	32.5x11.2x7.4	41.9x11.7x8.4
	Weight			kg	8.5	8.5	8.5	12.0
	Refrigerant Pipe	Liquid		mmxL(m)	ø6.35x7.5	ø6.35x7.5	ø6.35x7.5	ø6.35x7.5
		Gas		mmxL(m)	ø9.52x7.5	ø9.52x7.5	ø9.52x7.5	ø12.7x7.5
	Drain Hose			ø,mm	ø18,550	ø18,550	ø18,550	ø18,550
	Blower	Type			Cross Flow Fan	Cross Flow Fan	Cross Flow Fan	Cross Flow Fan
		Motor	Type		Resin/steel	Resin/steel	Resin/steel	Resin/steel
			Rated Output	W	-	-	-	-
Heat Exchanger					2ROW 10STEP	2ROW 10STEP	2ROW 10STEP	2ROW 16STEP
Refrigerant Control Unit					EEV	EEV	EEV	EEV

Product Specifications(cont.)

Item \ Model					MH020FAEA	MH026FAEA	MH035FAEA	MH052FAEA
					INDOOR UNIT			
Type					Wall-mounted	Wall-mounted	Wall-mounted	Wall-mounted
Perfor-mance	Cooling			kW	2.0	2.6	3.5	5.2
	Heating			kW	2.2	2.9	3.8	5.6
	Dehumidifying			ℓ /h	-	-	-	-
	Air Volume	Cooling		m^3/min	7.9	9.1	9.8	14.2
		Heating		m^3/min	8.2	9.3	10.0	14.6
	Noise	Cooling		dB(A)	31	31	35	40
		Heating		dB(A)	31	31	35	40
	Power			ø,V,Hz	1,220~240,50	1,220~240,50	1,220~240,50	1,220~240,50
Power	Power Consumption	Cooling		W	30	30	35	50
		Heating		W	30	30	35	50
	Operating Current	Cooling		A	0.18	0.18	0.19	0.3
		Heating		A	0.18	0.18	0.19	0.3
Size	Outer Dimension	WxHxD		mm	820 x 286 x 190	820 x 286 x 190	820 x 286 x 190	1,065 x 298 x 222
				inch	32.3 x 11.2 x 7.5	32.3 x 11.2 x 7.5	32.3 x 11.2 x 7.5	42.0 x 11.7 x 8.7
	Weight			kg	9	9	9	13
	Refrigerant Pipe	Liquid		mm	Ø6.35	Ø6.35	Ø6.35	Ø6.35
		Gas		mm	Ø9.52	Ø9.52	Ø9.52	Ø12.7
	Drain Hose			ø,mm	Ø18,550	Ø18,550	Ø18,550	Ø18,550
	Blower	Type			Cross Flow Fan	Cross Flow Fan	Cross Flow Fan	Cross Flow Fan
		Motor	Type		Resin/steel	Resin/steel	Resin/steel	Resin/steel
			Rated Output	W	-	-	-	-
Heat Exchanger					2ROW 14STEP	2ROW 14STEP	2ROW 14STEP	2ROW 16STEP
Refrigerant Control Unit					EEV	EEV	EEV	EEV

Item \ Model					MH026FSEA	MH035FSEA
					INDOOR UNIT	
Type					Slim 1 way cassette	Slim 1 way cassette
Perfor-mance	Cooling			kW	2.60	3.50
	Heating			kW	2.90	3.80
	Air Volume	Cooling		m^3/min	6.2	7.6
		Heating		m^3/min	7.5	8.2
	Noise	Cooling		dB(A)	30	32
		Heating		dB(A)	30	32
	Power			ø,V,Hz	1,220~240,50	1,220~240,50
Power	Power Consumption	Cooling		W	45	50
		Heating		W	45	50
	Operating Current	Cooling		A	0.23	0.25
		Heating		A	0.23	0.25
Size	Outer Dimension	WxHxD		mm	970x135x410	970x135x410
				inch	38.2x5.3x16.1	38.2x5.3x16.1
	Weight			kg	10.5	10.5
	Refrigerant Pipe	Liquid		mmxL(m)	ø6.35x7.5	ø6.35x7.5
		Gas		mmxL(m)	ø9.52x7.5	ø9.52x7.5
	Drain Hose			ø,mm	VP20(ID20/OD25)	VP20(ID20/OD25)
	Blower	Type			Cross Flow Fan	Cross Flow Fan
		Motor	Type		Feedback SSR	Feedback SSR
			Rated Output	W	28	28
Heat Exchanger					2ROW 12STEP	2ROW 12STEP
Refrigerant Control Unit					-	-

Product Specifications(cont.)

Item \ Model					MH026FJEA	MH035FJEA	MH052FJEA
					INDOOR UNIT		
Type					Console	Console	Console
Perfor-mance	Cooling			kW	2.60	3.50	5.20
	Heating				2.90	3.80	5.60
	Air Volume	Cooling		m^3/min	9.0	10.5	11.2
		Heating			10.5	11.3	12.6
	Noise	Cooling		dB(A)	28	39	44
		Heating			28	39	44
	Power			ø,V,Hz	1,220~240,50	1,220~240,50	1,220~240,50
Power	Power Consumption	Cooling		W	30	35	50
		Heating			30	35	50
	Operating Current	Cooling		A	0.25	0.29	0.35
		Heating			0.25	0.29	0.35
Size	Outer Dimension	WxHxD		mm	720x620x199	720x620x199	720x620x199
				inch	28.3x24.4x7.8	28.3x24.4x7.8	28.3x24.4x7.8
	Weight			kg	15.0	15.0	15.0
	Refrigerant Pipe	Liquid		mmxL(m)	ø6.35x7.5	ø6.35x7.5	ø6.35x7.5
		Gas		mmxL(m)	ø9.52x7.5	ø9.52x7.5	ø12.7x7.5
	Drain Hose			ø,mm	VP20(ID20/OD25)	VP20(ID20/OD25)	VP20(ID20/OD25)
	Blower	Type			Turbo Fan	Turbo Fan	Turbo Fan
		Motor	Type		steel	steel	steel
			Rated Output	W	28	28	28
Heat Exchanger					2ROW 20STEP	2ROW 20STEP	2ROW 20STEP
Refrigerant Control Unit					-	-	-

Item					Model	NJ026LHXEA	NJ035LHXEA	MH052FUEA
						INDOOR UNIT		
Type						Slim Duct	Slim Duct	MSP Duct
Perfor-mance	Cooling			kW		2.60	3.50	5.20
	Heating					2.90	3.80	5.60
	Air Volume	Cooling		m^3/min		8.6	9.8	16.3
		Heating				9.0	10.3	15.8
	Noise	Cooling		dB(A)		30	32	37
		Heating				30	32	37
	Power			ø,V,Hz		1,220~240,50	1,220~240,50	1,220~240,50
Power	Power Consumption	Cooling		W		80	80	170
		Heating				80	80	170
	Operating Current	Cooling		A		0.40	0.40	1.04
		Heating				0.40	0.40	1.04
Size	Outer Dimension	WxHxD		mm		900x199x600	900x199x600	900x260x480
				inch		35.4x7.8x23.6	35.4x7.8x23.6	35.4x10.2x18.9
	Weight			kg		26	26	29.5
	Refrigerant Pipe	Liquid		mmxL(m)		ø6.35x7.5	ø6.35x7.5	ø6.35x7.5
		Gas		mmxL(m)		ø9.52x7.5	ø9.52x7.5	ø12.7x7.5
	Blower	Type				Sirocco fan	Sirocco fan	Sirocco fan
		Motor	Type			Resin/steel	Resin/steel	Resin/steel
			Rated Output	W		29	29	50
Heat Exchanger						2ROW 12STEP	2ROW 12STEP	3ROW 10STEP
Refrigerant Control Unit						EEV	EEV	EEV

Item				Model	MH030FMEA	MH035FMEA	MH052FMEA
					INDOOR UNIT		
Type					Mini 4 way cassette	Mini 4 way cassette	Mini 4 way cassette
Perfor-mance	Cooling			kW	3.50	3.50	5.20
	Heating				3.80	3.80	5.60
	Air Volume	Cooling		m^3/min	10.8	10.8	12.1
		Heating			11.7	11.7	13.6
	Noise	Cooling		dB(A)	30	34	41
		Heating			30	34	41
	Power			ø,V,Hz	1,220~240,50	1,220~240,50	1,220~240,50
Power	Power Consumption	Cooling		W	85	85	120
		Heating			85	85	120
	Operating Current	Cooling		A	0.37	0.37	0.52
		Heating			0.37	0.37	0.52
Size	Outer Dimension	WxHxD		mm	575x575x260	575x575x260	575x575x260
				inch	22.6x22.6x10.2	22.6x22.6x10.2	22.6x22.6x10.2
	Weight			kg	17	17	17
	Refrigerant Pipe	Liquid		mmxL(m)	ø6.35x7.5	ø6.35x7.5	ø6.35x7.5
		Gas		mmxL(m)	ø9.52x7.5	ø9.52x7.5	ø12.7x7.5
	Blower	Type			Turbo Fan	Turbo Fan	Turbo Fan
		Motor	Type		steel	steel	steel
			Rated Output	W	55	55	55
Heat Exchanger					2ROW 10STEP	2ROW 10STEP	2ROW 10STEP
Refrigerant Control Unit					EEV	EEV	EEV

Item \ Model					AQV07PSBN	AQV09PSBN	AQV12PSBN
					INDOOR UNIT		
Type					Wall-mounted	Wall-mounted	Wall-mounted
Performance	Cooling			kW	2.00	2.50	3.5
	Heating				2.20	3.30	4.0
	Air Volume	Cooling		m^3/min	7.9	–	–
		Heating			8.2	–	–
	Noise	Cooling		dB(A)	36	36	38
		Heating			36	36	38
	Power			ø,V,Hz	1,220~240,50	1,220~240,50	1,220~240,50
Power	Power Consumption	Cooling		W	30	620	1060
		Heating			30	800	1080
	Operating Current	Cooling		A	0.18	3.0	4.8
		Heating			0.18	3.8	4.9
Size	Outer Dimension	WxHxD		mm	820x286x205	820x286x205	820x286x205
				inch	32.3x11.3x8.1	32.3x11.3x8.1	32.3x11.3x8.1
	Weight			kg	9.0	9.0	9.0
	Refrigerant Pipe	Liquid		mmxL(m)	ø6.35x7.5	ø6.35x7.5	ø6.35x7.5
		Gas		mmxL(m)	ø9.52x7.5	ø9.52x7.5	ø9.52x7.5
	Blower	Type			Cross Flow Fan	Cross Flow Fan	Cross Flow Fan
		Motor	Type		Resin/steel	Resin/steel	Resin/steel
			Rated Output	W	–	–	–
Heat Exchanger					2ROW 14STEP	2ROW 14STEP	2ROW 14STEP
Refrigerant Control Unit					–	–	–

Item \ Model					AQV18PSBN	AQV24PSBN
					INDOOR UNIT	
Type					Wall-mounted	Wall-mounted
Performance	Cooling			kW	5.0	6.6
	Heating				6.0	7.8
	Air Volume	Cooling		m^3/min	–	–
		Heating			–	–
	Noise	Cooling		dB(A)	40	41
		Heating			40	41
	Power			ø,V,Hz	1,220~240,50	1,220~240,50
Power	Power Consumption	Cooling		W	1470	2120
		Heating			1660	2160
	Operating Current	Cooling		A	6.8	9.0
		Heating			7.7	10.0
Size	Outer Dimension	WxHxD		mm	1065x230x298	1065x230x298
				inch	41.9x9.1x11.7	41.9x9.1x11.7
	Weight			kg	13.0	13.0
	Refrigerant Pipe	Liquid		mmxL(m)	ø6.35x7.5	ø6.35x7.5
		Gas		mmxL(m)	ø12.70x7.5	ø15.88x7.5
	Blower	Type			Cross Flow Fan	Cross Flow Fan
		Motor	Type		Resin/steel	Resin/steel
			Rated Output	W	–	–
Heat Exchanger					2ROW 16STEP	2ROW 16STEP
Refrigerant Control Unit					–	–

Product Specifications(cont.)

Item					Model	AQV09YWAN	AQV12YWAN	AQV18YWAN
						INDOOR UNIT		
Type						Wall-mounted	Wall-mounted	Wall-mounted
Perfor-mance	Cooling			kW		2.5	3.5	5.0
	Heating					3.2	4.0	6.0
	Air Volume	Cooling		m^3/min		–	–	–
		Heating				–	–	–
	Noise	Cooling		dB(A)		39	41	43
		Heating				39	41	43
	Power			ø,V,Hz		1,220~240,50	1,220~240,50	1,220~240,50
Power	Power Consumption	Cooling		W		520	850	1558
		Heating				670	980	1662
	Operating Current	Cooling		A		2.5	3.9	7.4
		Heating				3.1	4.5	7.7
Size	Outer Dimension	WxHxD		mm		880x313x237	880x313x237	880x313x237
				inch		34.6x12.3x9.3	34.6x12.3x9.3	34.6x12.3x9.3
	Weight			kg		10.5	10.5	11.5
	Refrigerant Pipe	Liquid		mmxL(m)		ø6.35x7.5	ø6.35x7.5	ø6.35x7.5
		Gas		mmxL(m)		ø9.52x7.5	ø9.52x7.5	ø12.7x7.5
	Blower	Type				Cross Flow Fan	Cross Flow Fan	Cross Flow Fan
		Motor	Type			Resin/steel	Resin/steel	Resin/steel
			Rated Output	W		–	–	–
Heat Exchanger						2ROW 16STEP	2ROW 16STEP	2ROW 16STEP
Refrigerant Control Unit						–	–	–

Item \ Model				RJ040F2HXEA	RJ050F2HXEA
				OUTDOOR UNIT	
Type				Free Joint Multi	
Perfor-mance	Capacity	Cooling	kW	4.0	5.0
		Heating		4.4	5.7
	Air Volume		m^3/min	30.35	33.05
	Noise	Cooling	dB(A)	47	48
		Heating		47	48
Power (Outdoor Only)	Power		ø,V,Hz	1,220-240V~,50Hz	
	Power Consumption	Cooling	W	1110	1425
		Heating		1020	1360
	Operating Current	Cooling	A	5.1	6.5
		Heating		4.7	6.2
	Fuse Capacity		A	15	15
Size	Dimension	WxHxD	mm	790x545x285	790x545x285
	Weight		kg	35	39
Com-pressor	Type			INVERTER	
	Model Name			UG4T150FUDJQSS	
	Motor	Type		BLDC Permanent Magnetic Motor	
	Lubricant Oil	Type		POE	
		Capacity	cc	650	
	Protection Device			OLP	OLP
Fan Motor & Blower	Blower	Type		Propeller	Propeller
		Size	mm	ø410	ø410
	Motor	Rated Output	W	-	-
		Capacitor	uFxVAC	-	-
Heat Exchanger				2ROW 24STEP	2ROW 28STEP
Refrigerant Control Device				EEV	EEV
Charging Refrigerant(R410A)			gr	1,300	1,600

Product Specifications(cont.)

Item				Model	RJ060F3HXEA	RJ070F4HXEA	RJ080F4HXEA
					OUTDOOR UNIT		
Type					Free Joint Multi		
Perfor-mance	Capacity	Cooling	kW		5.9	7.0	8.0
		Heating			6.3	8.6	9.3
	Air Volume		m^3/min		41	44.8	45.4
	Noise	Cooling	dB(A)		48	49	50
		Heating			48	49	50
Power (Outdoor Only)	Power		ø,V,Hz		1,220-240V~,50Hz		
	Power Consumption	Cooling	W		1600	1900	2300
		Heating			1400	2000	2000
	Operating Current	Cooling	A		7.3	8.7	10.5
		Heating			6.4	9.2	10.1
	Fuse Capacity		A		20	30	30
Size	Dimension	WxHxD	mm		880x798x310	880x798x310	880x798x310
	Weight		kg		59	65	65
Com-pressor	Type				Twin Rotary	Twin Rotary	Twin Rotary
	Model Name				G8T200FUAEW	G8T260FUAEW	G8T260FUEAW
	Motor	Type			BLDC Permanent Magnetic Motor		
	Lubricant Oil	Type			POE		
		Capacity	cc		700	700	700
	Protection Device				OLP	OLP	OLP
Fan Motor & Blower	Blower	Type			Propeller	Propeller	Propeller
		Size	mm		ø460	ø460	ø460
	Motor	Rated Output	W		50	50	50
		Capacitor	uFxVAC		-	-	-
Heat Exchanger					2ROW 36STEP	2ROW 36STEP	2ROW 36STEP
Refrigerant Control Device					EEV	EEV	EEV
Charging Refrigerant(R410A)			gr		2,200	2,800	2,800

2-3 The Comparative Specifications of Product

Item		Development Model		Comparative Model	
		RJ040F2HXEA		MH040FXEA2C	
Design	Indoor Unit				
	Outdoor Unit				
Net Weight	Indoor Unit	MH020FVEA MH026FVEA MH035FVEA	8.5kg	MH020FVEA MH026FVEA MH035FVEA	8.5kg
		MH020FNEA MH026FNEA MH035FNEA	7.8kg	MH020FNEA MH026FNEA MH035FNEA	7.8kg
		MH023FBEA MH026FBEA MH035FBEA	10.2kg	MH023FBEA MH026FBEA MH035FBEA	10.2kg
		MH020FAEA MH026FAEA MH035FAEA	9.0kg	MH020FAEA MH026FAEA MH035FAEA	9.0kg
		AQV07/09/12PSBN	9.0kg		
		AQV09/12YWAN	10.5kg		
		MH026FJEA MH035FJEA	15.0kg	MH026FJEA MH035FJEA	15.0kg
		MH026FSEA MH035FSEA	10.5kg	MH026FSEA MH035FSEA	10.5kg
				MH026FKEA MH035FKEA	15.0kg
	Outdoor Unit	RJ040F2HXEA	35.0kg	MH040FXEA2C	14.0kg

The Comparative Specifications of Product(cont.)

Item		RJ040F2HXEA		MH040FXEA2C	
Outer Dimension	Indoor Unit	MH020/026/035FVEA	825x285x189mm	MH020/026/035FVEA	825x285x189mm
		MH020/026/035FNEA	825x285x189mm	MH020/026/035FNEA	825x285x189mm
		MH023/026/035FBEA	900x304x185mm	MH023/026/035FBEA	900x304x185mm
		MH020/026/035FAEA	820x286x190mm	MH020/026/035FAEA	820x286x190mm
		AQV07/09/12PSBN	820x286x205mm		
		AQV09/12YWAN	880x313x237mm		
		MH026/035FJEA	720x620x199mm	MH026/035FJEA	720x620x199mm
		MH026/035FSEA	970x135x410mm	MH026/035FSEA	970x135x410mm
				MH026/035FKEA	970x180x390mm
	Outdoor Unit	RJ040F2HXEA	790X545X285mm	MH040FXEA2C	790X545X285mm
Noise	Indoor Unit	MH020/026/035FVEA	31/31/35 dB ↓	MH020/026/035FVEA	31/31/35 dB ↓
		MH020/026/035FNEA	32/32/36 dB ↓	MH020/026/035FNEA	32/32/36 dB ↓
		MH023/026/035FBEA	31/31/35 dB ↓	MH023/026/035FBEA	31/31/35 dB ↓
		MH020/026/035FAEA	31/31/35 dB ↓	MH020/026/035FAEA	31/31/35 dB ↓
		AQV07/09/12PSBN	36/36/38 dB ↓		
		AQV09/12YWAN	39/41 dB ↓		
		MH026/035FJEA	28/39 dB ↓	MH026/035FJEA	28/39 dB ↓
		MH026/035FSEA	30/32 dB ↓	MH026/035FSEA	30/32 dB ↓
				MH026/035FKEA	36/38 dB ↓
	Outdoor Unit	RJ040F2HXEA	47 dB ↓	MH040FXEA2C	47 dB ↓
The Feature of Product		Free Joint Multi(Variable Indoor Unit)		Free Joint Multi(Variable Indoor Unit)	
		BLDC INVERTER COMPRESSOR		BLDC INVERTER COMPRESSOR	

The Comparative Specifications of Product(cont.)

Item		Development Model		Comparative Model	
		RJ050F2HXEA		MH050FXEA2C	
Design	Indoor Unit				
	Outdoor Unit				
Net Weight	Indoor Unit	MH020FVEA MH026FVEA MH035FVEA	8.5kg	MH020FVEA MH026FVEA MH035FVEA	8.5kg
		MH020FNEA MH026FNEA MH035FNEA	7.8kg	MH020FNEA MH026FNEA MH035FNEA	7.8kg
		MH023FBEA MH026FBEA MH035FBEA	10.2kg	MH023FBEA MH026FBEA MH035FBEA	10.2kg
		MH020FAEA MH026FAEA MH035FAEA	9.0kg	MH020FAEA MH026FAEA MH035FAEA	9.0kg
		AQV07/09/12PSBN	9.0kg		
		AQV18PSBN	13.0kg		
		AQV09/12/18YWAN	10.5/11.5kg		
		MH026FJEA MH035FJEA MH052FJEA	15.0kg	MH026FJEA MH035FJEA MH052FJEA	15.0kg
		MH026FSEA MH035FSEA	10.5kg	MH026FSEA MH035FSEA	10.5kg
		MH030/035FMEA	15.0kg	MH030/035FMEA	15.0kg
		NJ026/035LHXEA	26.0kg	NJ026/035LHXEA	26.0kg
		MH052FVEA	12.0kg	MH052FVEA	12.0kg
		MH052FNEA MH052FBEA MH052FAEA	13.0kg	MH052FNEA MH052FBEA MH052FAEA	13.0kg
				MH026FKEA MH035FKEA	15.0kg
	Outdoor Unit	RJ050F2HXEA	39.0kg	MH050FXEA2C	53.0kg

The Comparative Specifications of Product(cont.)

Item		RJ050F2HXEA		MH050FXEA2C	
Outer Dimension	Indoor Unit	MH020/026/035FVEA	825x285x189mm	MH020/026/035FVEA	825x285x189mm
		MH020/026/035FNEA	825x285x189mm	MH020/026/035FNEA	825x285x189mm
		MH023/026/035FBEA	900x304x185mm	MH023/026/035FBEA	900x304x185mm
		MH020/026/035FAEA	820x286x190mm	MH020/026/035FAEA	820x286x190mm
		AQV07/09/12PSBN	820x286x205mm		
		AQV18PSBN	1,065x230x298mm		
		AQV09/12/18YWAN	880x313x237mm		
		MH026/035/052FJEA	720x620x199mm	MH026/035/052FJEA	720x620x199mm
		MH026/035FSEA	970x135x410mm	MH026/035FSEA	970x135x410mm
		MH030/035FMEA	575x260x575mm	MH030/035FMEA	575x260x575mm
		NJ026/035LHXEA	900x199x600m	NJ026/035LHXEA	900x199x600m
		MH052FVEA	1,065x298x214mm	MH052FVEA	1,065x298x214mm
		MH052FNEA	1,099x315x217mm	MH052FNEA	1,099x315x217mm
		MH052FBEA	1,100x307x225mm	MH052FBEA	1,100x307x225mm
		MH052FAEA	1,065x298x222mm	MH052FAEA	1,065x298x222mm
				MH026/035FKEA	970x180x390mm
	Outdoor Unit	RJ050F2HXEA	790X545X285mm	MH050FXEA2C	880x638x310mm
Noise	Indoor Unit	MH020/026/035/052FVEA	31/31/35/40 dB ↓	MH020/026/035/052FVEA	31/31/35/40 dB ↓
		MH020/026/035/052FNEA	32/32/36/40 dB ↓	MH020/026/035/052FNEA	32/32/36/40 dB ↓
		MH023/026/035/052FBEA	31/31/35/40 dB ↓	MH023/026/035/052FBEA	31/31/35/40 dB ↓
		MH020/026/035/52FAEA	31/31/35/40 dB ↓	MH020/026/035/52FAEA	31/31/35/40 dB ↓
		AQV07/09/12/18PSBN	36/36/38/40 dB ↓		
		AQV09/12/18YWAN	39/40/43 dB ↓		
		MH026/035/052FJEA	28/39/44 dB ↓	MH026/035/052FJEA	28/39/44 dB ↓
		MH026/035FSEA	30/32 dB ↓	MH026/035FSEA	30/32 dB ↓
		MH030/035FMEA	34/34 dB ↓	MH030/035FMEA	30/34 dB ↓
		NJ026/035LHXEA	30/32 dB ↓	NJ026/035LHXEA	30/32 dB ↓
				MH026/035FKEA	36/38 dB ↓
	Outdoor Unit	RJ050F2HXEA	48 dB ↓	MH050FXEA2C	48 dB ↓
The Feature of Product		Free Joint Multi(Variable Indoor Unit)		Free Joint Multi(Variable Indoor Unit)	
		BLDC INVERTER COMPRESSOR		BLDC INVERTER COMPRESSOR	

The Comparative Specifications of Product(cont.)

Item		Development Model		Comparative Model	
		RJ060F3HXEA		MH060FXEA3B	
Design	Indoor Unit				
	Outdoor Unit				
Net Weight	Indoor Unit	MH020/026/035/052FVEA	8.5/12kg	MH020/026/035/052FVEA	8.5/12kg
		MH020/026/035/052FNEA	7.8/13kg	MH020/026/035/052FNEA	7.8/13kg
		MH023/026/035/052FBEA	10.2/13kg	MH023/026/035/052FBEA	10.2/13kg
		MH020/026/035/052FAEA	9.0/13kg	MH020/026/035/052FAEA	9.0/13kg
		AQV07/09/12/18PSBN	9.0/13kg		
		AQV09/12/18YWAN	10.5/11.5kg		
		MH026/035/052FJEA	15.0kg	MH026/035/052FJEA	15.0kg
		MH026/035FSEA	10.5kg	MH026/035FSEA	10.5kg
		MH030/035/052FMEA	15.0kg	MH030/035/052FMEA	15.0kg
		NJ026/035LHXEA	26.0kg	NJ026/035LHXEA	26.0kg
		MH052FUEA	29.5kg	MH052FUEA	29.5kg
				MH026/035FKEA	15.0kg
	Outdoor Unit	RJ060F3HXEA	59.0kg	MH060FXEA3B	59.0kg

The Comparative Specifications of Product(cont.)

Item		RJ060F3HXEA		MH060FXEA3B	
Outer Dimension	Indoor Unit	MH020/026/035FVEA MH052FVEA	825x285x189mm 1065x298x214mm	MH020/026/035FVEA MH052FVEA	825x285x189mm 1065x298x214mm
		MH020/026/035FNEA MH052FNEA	825x285x189mm 1099x315x217mm	MH020/026/035FNEA MH052FNEA	825x285x189mm 1099x315x217mm
		MH023/026/035FBEA MH052FBEA	900x304x185mm 1100x307x225mm	MH023/026/035FBEA MH052FBEA	900x304x185mm 1100x307x225mm
		MH020/026/035FAEA MH052FAEA	820x286x190mm 1065x298x222mm	MH020/026/035FAEA MH052FAEA	820x286x190mm 1065x298x222mm
		AQV07/09PSBN AQV18PSBN	820x286x205mm 1065x230x298mm		
		AQV09/12/18YWAN	880x313x237mm		
		MH026/035/052FJEA	720x620x199mm	MH026/035/052FJEA	720x620x199mm
		MH026/035FSEA	970x135x410mm	MH026/035FSEA	970x135x410mm
		MH030/035/052FMEA	575x260x575mm	MH030/035/052FMEA	575x260x575mm
		NJ026/035LHXEA	900x199x600m	NJ026/035LHXEA	900x199x600m
		MH052FUEA	900x260x480m	MH052FUEA	900x260x480m
				MH026/035FKEA	970x180x390mm
	Outdoor Unit	RJ060F3HXEA	880X798X310mm	MH060FXEA3B	880X798X310mm
Noise	Indoor Unit	MH020/026/035/052FVEA	31/31/35/40 dB ↓	MH020/026/035/052FVEA	31/31/35/40 dB ↓
		MH020/026/035/052FNEA	32/32/36/40 dB ↓	MH020/026/035/052FNEA	32/32/36/40 dB ↓
		MH023/026/035/052FBEA	31/31/35/40 dB ↓	MH023/026/035/052FBEA	31/31/35/40 dB ↓
		MH020/026/035/052FAEA	31/31/35/40 dB ↓	MH020/026/035/052FAEA	31/31/35/40 dB ↓
		AQV07/09/12/18PSBN	36/36/38/40 dB ↓		
		AQV09/12/18YWAN	39/41/43 dB ↓		
		MH026/035/052FJEA	28/39/41 dB ↓	MH026/035/052FJEA	28/39/41 dB ↓
		MH026/035FSEA	30/32 dB ↓	MH026/035FSEA	30/32 dB ↓
		MH030/035/052FMEA	30/34/41 dB ↓	MH030/035/052FMEA	30/34/41 dB ↓
		NJ026/035LHXEA	30/32 dB ↓	NJ026/035LHXEA	30/32 dB ↓
		MH052FUEA	37 dB ↓	MH052FUEA	37 dB ↓
				MH026/035FKEA	36/38 dB ↓
	Outdoor Unit	RJ060F3HXEA	48 dB ↓	MH060FXEA3B	48 dB ↓
The Feature of Product		Free Joint Multi(Variable Indoor Unit)		Free Joint Multi(Variable Indoor Unit)	
		BLDC INVERTER COMPRESSOR		BLDC INVERTER COMPRESSOR	

The Comparative Specifications of Product(cont.)

Item		Development Model		Comparative Model	
		RJ070F4HXEA RJ080F4HXEA		MH080FXEA4B	
Design	Indoor Unit				
	Outdoor Unit				
Net Weight	Indoor Unit	MH020/026/035/052FVEA	8.5/12kg	MH020/026/035/052FVEA	8.5/12kg
		MH020/026/035/052FNEA	7.8/13kg	MH020/026/035/052FNEA	7.8/13kg
		MH023/026/035/052FBEA	10.2/13kg	MH023/026/035/052FBEA	10.2/13kg
		MH020/026/035/052FAEA	9.0/13kg	MH020/026/035/052FAEA	9.0/13kg
		AQV07/09/12/24PSBN	9.0/13kg		
		AQV09/12/18YWAN	10.5/11.5kg		
		MH026/035/052FJEA	15.0kg	MH026/035/052FJEA	15.0kg
		MH026/035FSEA	10.5kg	MH026/035FSEA	10.5kg
		MH030/035/052FMEA	15.0kg	MH030/035/052FMEA	15.0kg
		NJ026/035LHXEA	26.0kg	NJ026/035LHXEA	26.0kg
		MH052FUEA	29.5kg	MH052FUEA	29.5kg
				MH026/035FKEA	15.0kg
	Outdoor Unit	RJ070F4HXEA/RJ080F4HXEA	65/65kg	MH080FXEA4B	65.0kg

The Comparative Specifications of Product(cont.)

Item		RJ070F4HXEA RJ080F4HXEA		MH080FXEA4B	
Outer Dimension	Indoor Unit	MH020/026/035FVEA MH052FVEA	825x285x189mm 1065x298x214mm	MH020/026/035FVEA MH052FVEA	825x285x189mm 1065x298x214mm
		MH020/026/035FNEA MH052FNEA	825x285x189mm 1099x315x217mm	MH020/026/035FNEA MH052FNEA	825x285x189mm 1099x315x217mm
		MH023/026/035FBEA MH052FBEA	900x304x185mm 1100x307x225mm	MH023/026/035FBEA MH052FBEA	900x304x185mm 1100x307x225mm
		MH020/026/035FAEA MH052FAEA	820x286x190mm 1065x298x222mm	MH020/026/035FAEA MH052FAEA	820x286x190mm 1065x298x222mm
		AQV07/09PSBN AQV18/24PSBN	820x286x205mm 1065x230x298mm		
		AQV09/12/18YWAN	880x313x237mm		
		MH026/035/052FJEA	720x620x199mm	MH026/035/052FJEA	720x620x199mm
		MH026/035FSEA	970x135x410mm	MH026/035FSEA	970x135x410mm
		MH030/035/052FMEA	575x260x575mm	MH030/035/052FMEA	575x260x575mm
		NJ026/035LHXEA	900x199x600m	NJ026/035LHXEA	900x199x600m
		MH052FUEA	900x260x480m	MH052FUEA	900x260x480m
				MH026/035FKEA	970x180x390mm
	Outdoor Unit	RJ070/080F4HXEA	880X798X310mm	MH080FXEA4B	880X798X310mm
Noise	Indoor Unit	MH020/026/035/052FVEA	31/31/35/40 dB ↓	MH020/026/035/052FVEA	31/31/35/40 dB ↓
		MH020/026/035/052FNEA	32/32/36/40 dB ↓	MH020/026/035/052FNEA	32/32/36/40 dB ↓
		MH023/026/035/052FBEA	31/31/35/40 dB ↓	MH023/026/035/052FBEA	31/31/35/40 dB ↓
		MH020/026/035/052FAEA	31/31/35/40 dB ↓	MH020/026/035/052FAEA	31/31/35/40 dB ↓
		AQV07/09/12/18/24PSBN	36/36/38/40/41 dB ↓		
		AQV09/12/18YWAN	39/41/43 dB ↓		
		MH026/035/052FJEA	28/39/44 dB ↓	MH026/035/052FJEA	28/39/44 dB ↓
		MH026/035FSEA	30/32 dB ↓	MH026/035FSEA	30/32 dB ↓
		MH030/035/052FMEA	30/34/41 dB ↓	MH030/035/052FMEA	30/34/41 dB ↓
		NJ026/035LHXEA	30/32 dB ↓	NJ026/035LHXEA	30/32 dB ↓
		MH052FUEA	37 dB ↓	MH052FUEA	37 dB ↓
				MH026/035FKEA	36/38 dB ↓
	Outdoor Unit	RJ070/080F4HXEA	49/50 dB ↓	MH080FXEA4B	51 dB ↓
The Feature of Product		Free Joint Multi(Variable Indoor Unit)		Free Joint Multi(Variable Indoor Unit)	
		BLDC INVERTER COMPRESSOR		BLDC INVERTER COMPRESSOR	

2-4 Accessory and Option Specifications

2-4-1 Indoor Unit Accessories

■ **MH✳✳✳FNEA**

Item	Descriptions	Code-No.	Q'TY	Remark
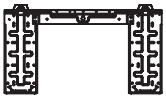	Installation Plate (Plate-Hanger)	DB97-02851C (MH✳✳✳ FNEA except MH052FNEA) DB90-02738A (MH052FNEA)	1	Indoor Unit
	Remote Control	DB93-03170Z	1	
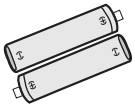	Batteries for Remote Control	DB47-90024A	2	
	User Manual	DB98-28925A	1	
	Installation Manual	DB98-31791A	1	

✳ The design and shape can be changed according to the model.

■ MH✳✳✳FBEA

Item	Descriptions	Code-No.	Q'TY	Remark
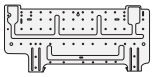	Installation Plate (Plate-Hanger)	DB70-00819A (MH✳✳FBEA except MH052FBEA) DB90-03483A (MH052FBEA)	1	Indoor Unit
	Remote Control	DB93-04700S	1	
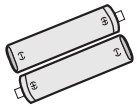	Batteries for Remote Control	DB47-90024A	2	
	User Manual	DB98-29019A	1	
	Installation Manual	DB98-31788A	1	

✳ The design and shape can be changed according to the model.

■ MH✳✳✳FVEA

Item	Descriptions	Code-No.	Q'TY	Remark
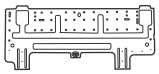	Plate Hanger	DB97-02851C (MH***FVEA except MH052FVEA) DB90-02738A (MH052FVEA)	1	Indoor Unit
	Remote Control	DB93-04700S	1	
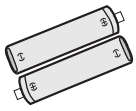	Batteries for Remote Control	DB47-90024A	2	
	User Manual	DB98-31994A	1	
	Installation Manual	DB98-31789A	1	
	Wired Remote Controller cables	DB39-00943D C/W COMM2 DB39-01047A Connect Wire	1	

✳ The design and shape can be changed according to the model.

■ MH✳✳✳FAEA

Item	Descriptions	Code-No.	Q'TY	Remark
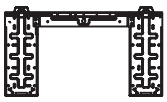	Installation Plage (Plate-Hanger)	DB97-02851C (MH020/026/035FAEA)	1	Indoor Unit
		DB97-02738A (MH052FAEA)		
	Remote Control	DB93-06335E	1	
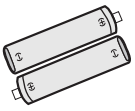	Batteries for Remote Control	DB47-90024A	2	
	User Manual	DB98-31202A	1	
	Installation Manual	DB98-31790A	1	

✳ The design and shape can be changed according to the model.

■ Filter

Image	Part name	Code-No.	Remark
	Pre-filter	DB63-02129C(Left) DB63-02130C(Right)	wash in waer
	Catechin Filter	DB63-00615B	Clean with vaccum cleaner or soft bursh
	Deodorizing filter	DB63-00616A	

■ MH✳✳✳FSEA

Item	Descriptions	Code-No.	Q'TY	Remark
	Pattern sheet (Pad Install A)	DB69-01947A/B	1	Indoor Unit
	Pattern sheet (Pad Install B)	DB69-01936A	1	
	Insulation refrigerant pipe (Insulation-base)	DB72-00401C	2	
	Insulation cover band	DB72-00109J	1	
	Installation Manual	DB98-27682A	1	
	Flexible hose (Ass'y drain hose joint)	DB94-01258C	1	
	Insulation drain hose	DB62-04783A	1	
	Rubber (Grommet Hanger)	DB63-00237A	8	
	Insulation hose	DB72-00398B	1	

✳ The design and shape can be changed according to the model.

■ MH✳✳✳FMEA

Item	Descriptions	Code-No.	Q'TY	Remark
	Pattern sheet	DB69-01369A	1	Indoor Unit
	Insulation cover drain	DB62-01959A	1	
	Insulation-drain	DB62-01960B	1	
	Insulation cover band	DB72-00109J	1	
	Insulation pipe	DB72-00109G	1	
	Insulation-Install inlet	DB72-00143E	2 (MH030FMEA/ MH035FMEA) 1 (MH052FMEA)	
	Insulation-drain	DB72-00143G	1 (MH052FMEA only)	
	Cable-tie	DB65-00191A	5	
	Ass'y drain hose	DB94-01270D	1	
	M4x12 tapped Screw	6002-000213	4	
	Installation manual	DB98-27682A	1	
	Safety net	DB63-01372A	1	

✳ The design and shape can be changed according to the model.

■ MH✳✳✳FJEA

Item	Descriptions	Code-No.	Q'TY	Remark
	User Manual	DB98-30301A	1	Indoor Unit
	Installation Manual	DB98-29317A	1	
	Seal-Install Outlet	DB62-05580V	1	
	Seal-Pipe SVC	DB62-05691C	1	
	Cable-Tie	DB65-10088C	8	
	Wireless Remote Control	DB93-07547B	1	
	Battery	DB47-90024A	2	

■ NJ ✳✳✳LHXEA

Item	Descriptions	Code-No.	Q'TY	Remark
	User Manual	DB98-31997A	1	Indoor Unit
	Installation Manual	DB98-31792A	1	
	Pattern Sheet	DB97-03906A/B	1	
	Insulation-Install Outlet	DB72-00143D	1	
	Insulation-Install Inlet	DB72-00143E	1	
	Drain Hose Joint	DB94-00758B	1	
	Rubber (Grommet Hanger)	DB63-00237A	8	
	Insulation-Drain Out	DB62-03439N	1	
	Insulation-Out	DB62-03439J	2	
	Insulation-Drain In	DB62-03440N	1	
	Cable-tie	DB65-10088C	8	
	Drain Pipe Holder	DB90-02064A	2	
	Wired remote controller Box	DB97-01904G	1	

✳ The design and shape can be changed according to the model.

■ MH052FUEA

Item	Descriptions	Code-No.	Q'TY	Remark
	Wired Remote Controller	DB97-04273B	1	Indoor Unit
	User Manual	DB98-31997A	1	
	Installation Manual	DB98-31792A	1	
	Insulation	DB62-03439J	1	
		DB62-03439N	1	
	Insulation Drain In	DB62-03440N	1	
	Insulation Install Inlet	DB72-00143E	1	
		DB72-00143G	1	
	Ass'y Holder Drain Pipe	DB90-02064A	1	
	Ass'y Drain Hose Join	DB94-00758B	1	
	Rubber (Grommet Hanger)	DB63-00237A	8	
	Cable-Tie	DB65-10088C	8	

✳ The design and shape can be changed according to the model.

■ AQV✳✳✳ PSBN

Item	Descriptions	Code-No.	Q'TY	Remark
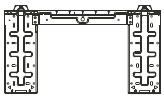	Assy Plate Hanger	DB97-02851C (AQV07/09/12PSBN) DB90-02738A (AQV24PSBN)	1	Indoor Unit
	Remote Control	DB93-11115K	1	
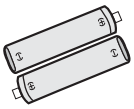	Batteries for Remote Control	DB47-90024A	2	
	Manual	DB98-32436A	1	

■ AQV✳✳✳ YWAN

Item	Descriptions	Code-No.	Q'TY	Remark
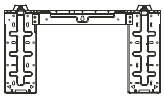	Assy Plate Hanger	DB90-06125A	1	Indoor Unit
	Remote Control	DB93-11115H	1	
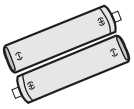	Batteries for Remote Control	DB47-90024A	2	
	Manual	DB98-32437A	1	

2-4-2 Outdoor Unit Accessories

■ RJ040F2XHEA/RJ050F2XHEA/RJ060F3XHEA/RJ070F4XHEA/RJ080F4XHEA

Item	Descriptions	Code-No.	Q'TY	Remark
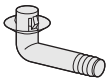	Drain Plug Out	DB67-00477A	1	Outdoor Unit
	Energy Label (Ass'y-Label Energy)	DB98-33093A (040)	1	
		DB98-33093B (050)		
		DB98-33093C (060)		
		DB98-33093D (070)		
		DB98-33093E (080)		
	Rubber Leg	DB73-20134A	4	
	Flare Nuts, 9.52mm outer pipe diameter	DB60-30010B	1 (RJ050F2HXEA) (RJ060F3HXEA)	
			2 (RJ070/080F4HXEA)	
	Installation Manual	DB98-28896A	1	
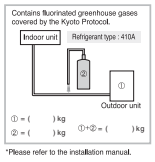	Ass'y -Label Kyoto Protocol	DB98-28756A	1	
	Nipple Connector	DB67-00789A	1 (RJ050F2HXEA) (RJ060F3HXEA)	
			2 (RJ070/080F4HXEA)	
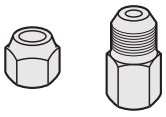	Flare Nuts 5/8” Nipple Connector 1/2” to 5/8”	DB60-30010D DB67-01157A	1 (Only RJ080F4HXEA)	

✳ The design and shape can be changed according to the model.

2-4-3 Transmitter Unit Accessories:

Item	Descriptions	Code-No.	Q'TY	Remark
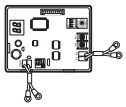	Transmitter (Ass'y PCB-DVM Plus I/M)	DB93-03568A (MIM-B13)	1	Transmitter
	Transmitter Power cable (Wire Harness-DC Source)	DB39-00378E (MIM-B13)	1	
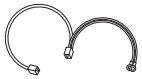	Transmitter communication cable (Connect Wire-COM)	DB39-00253B (MIM-B13)	1	
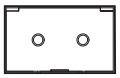	Case (Case-Relay PCB Out)	DB61-00450B (MIM-B13)	1	
	Cable-tie	DB65-10088B	3	
	Installation Manual	DB98-25776A (MIM-B13)	1	

✳ The design and shape can be changed according to the model.

MEMO

3. Disassembly and Reassembly

■ Necessary Tools

Item	Remark
+SCREW DRIVER	
MONKEY SPANNER	

3-1 Outdoor Unit

Take care of the electrical shock by contact on the charging parts before the discharge after power off. (If takes approximately 2 minutes to discharge.)

3-1-1 RJ040F2HXEA/RJ050F2HXEA

No	Parts	Procedure	Remark
1	Common Work & Control Out	1) Loosen 1 fixing screw(CCW)of the Cover-Side. (Use +Screw Driver.)	
		2) Loosen each 6 screws(CCW)on cabi top. (Use +Screw Driver.)	
		3) Loosen each 7 screws(CCW)on cabi front. (Use +Screw Driver.)	
		4) Loosen 2 screw(CCW)fixed to assemble Plate Control Out with Cabinet-Side RH. (Use +Screw Driver.)	
		5) Loosen 2 fixing screws(CCW)on Cabinet-Side RH. (Use +Screw Driver.)	

No	Parts	Procedure	Remark
		6) Loosen 4 screws(CCW)fixed to assemble Bracket Valve with Cabinet-Side RH. (Use +Screw Driver.)	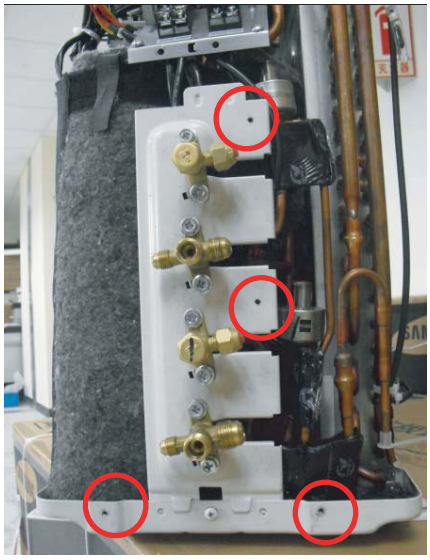
		7) Loosen 3 fixing screws(CCW)of Cabinet Side LF. (Use +Screw Driver.)	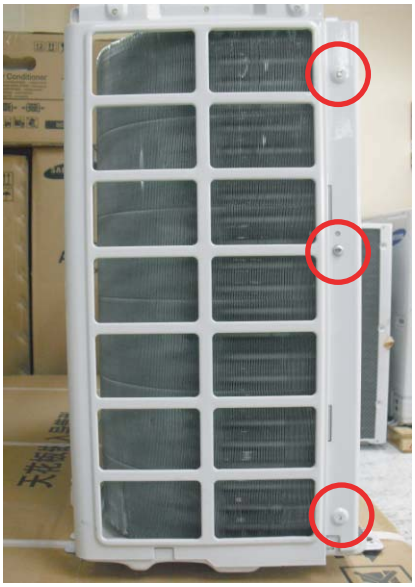

No	Parts	Procedure	Remark
2	Ass'y Control Out	1) Detach the Motor Wire from the PCB of Ass'y Control Out.	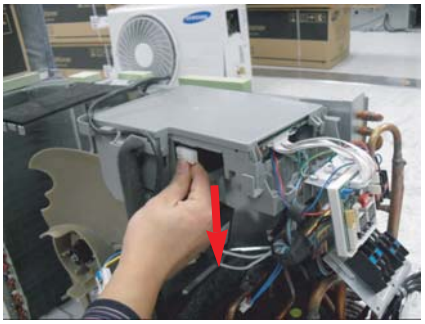
		2) Detach several connectors from the PCB of Ass'y Control Out.	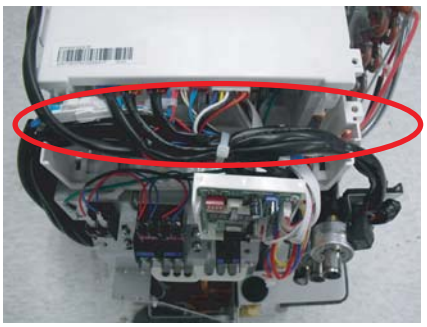
		3) Detach 2 Connect Wires from Reactor.	
		4) Loosen 1 screw(CCW)fixed to assemble Ass'y Control Out with Partition. (Use +Screw Driver.)	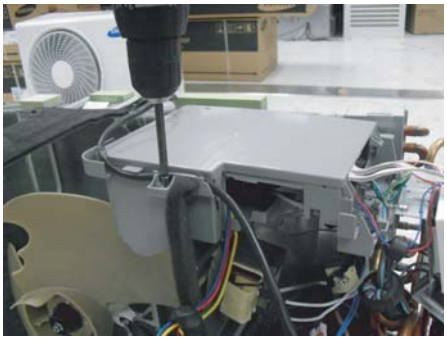

No	Parts	Procedure	Remark
3	Fan & Motor	1) Release the refrigerant at first. 2) Loosen fixing screw(CW). (Use Monkey Spanner.) 3) Disassemble the fan and motor	
4	Heat Exchanger	1) Loosen 2 fixing screws(CCW)on both sides. (Use +Screw Driver.) 2) Disassemble the pipes in both inlet and outlet with welding torch. 3) Detach the Heat Exchanger. ⚠ Before you disassemble the pipes and Condenser,be sure that there should be no refrigerant remained in the unit.	
5	Ass'y Valve 4 way & Ass'y Valve EEV	1) Loosen 8 bolts(CCW)fixed to assemble Valve Service with Bracket Valve like the picture on the right side. (Use Monkey Spanner.) 2) Disassemble the pipes assembled the suction and discharge sides of the Compressor with welding torch.	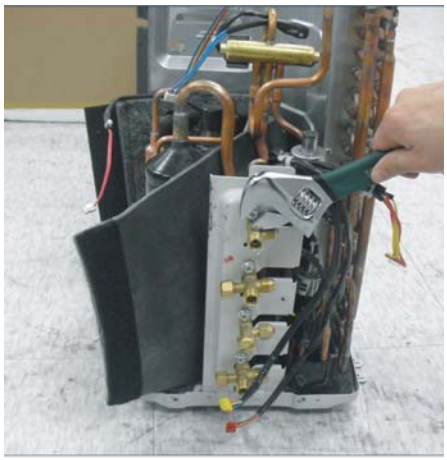
6	Compressor	1) Loosen the Nut(CCW)of Terminal Cover. (Use Monkey Spanner.) 2) Detach the Terminal Cover and detach the Connect Comp Wire from Compressor. 3) Disassemble the Felt Comp Sound. 4) Loosen the 3 bolts(CCW)at the bottom of Compressor like the picture on the right side. (Use Monkey Spanner.)	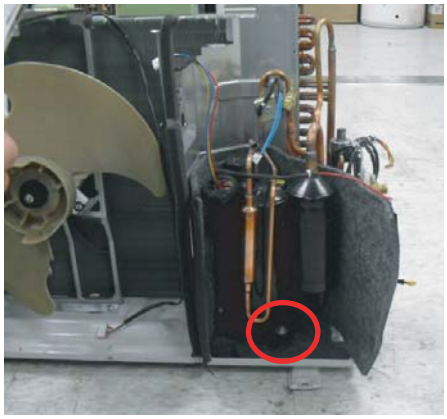

3-1-2 RJ060F3HXEA/RJ070F4HXEA/RJ080F4HXEA

No	Parts	Procedure	Remark
1	Common Work & Control Out	1) Loosen 7 fixing screws and detach the Cabinet side RH. (Use +Screw Driver.) 2) Detach the Cable-Connector Wire from the Terminal-Block. 3) Loosen 2 fixing screws of the Ass'y Control Out. (Use +Screw Driver.)	 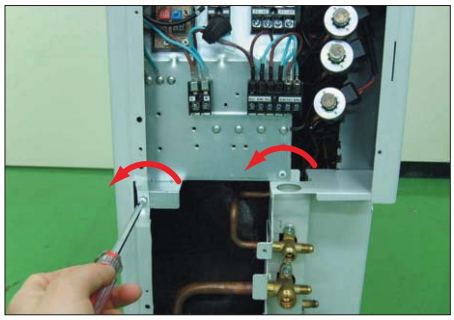
		4) Loosen 6 fixing screws and detach the Cabinet Upper. (Use +Screw Driver.)	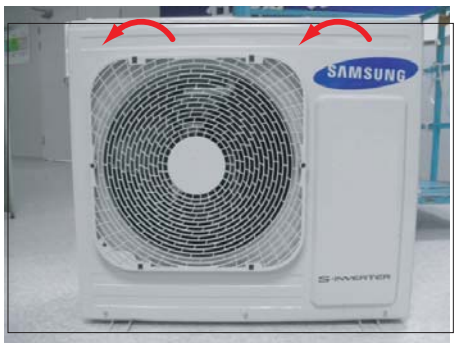
		5) Loosen 2 fixing screws, 7 bolts and detach the Cabinet Front. (Use +Screw Driver.)	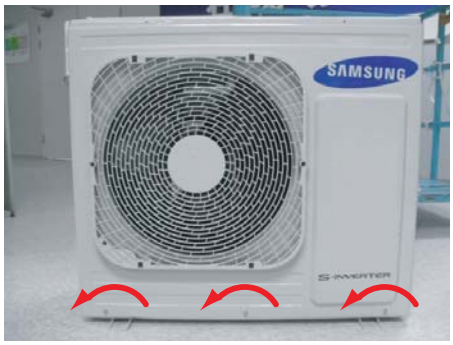

No	Parts	Procedure	Remark
			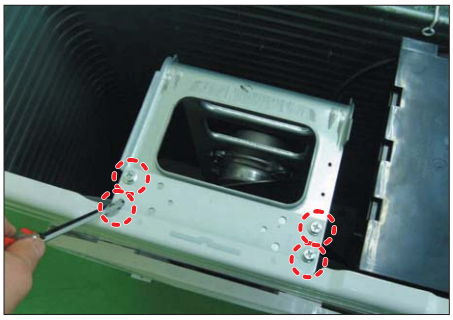
		6) Loosen 2 fixing screw and pull up the Control Box. (Use +Screw Driver.)	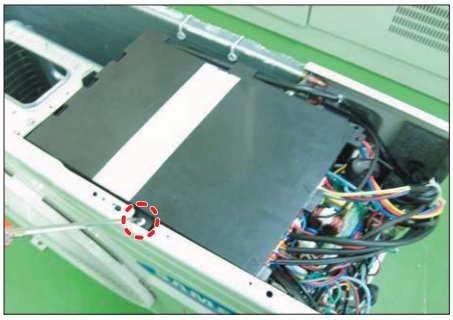
		7) Pull the felt and detach it.	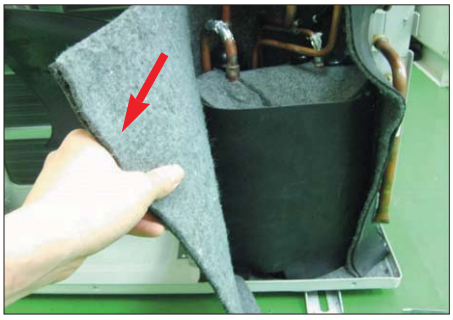
		8) Detach the Terminal Cover and detach the comp lead wire.	

No	Parts	Procedure	Remark
2	Fan & Motor	1) Loosen the fixing nut and detach the Fan. (Use Monkey Spanner.)	
		2) Loosen 4 fixing bolts and detach the Motor. (Use +Screw Driver.)	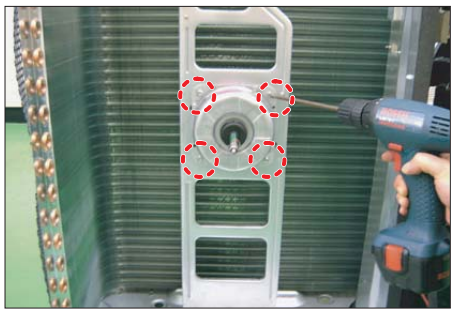
		3) Loosen 4 fixing bolts and detach the Bracket Motor. (Use +Screw Driver.)	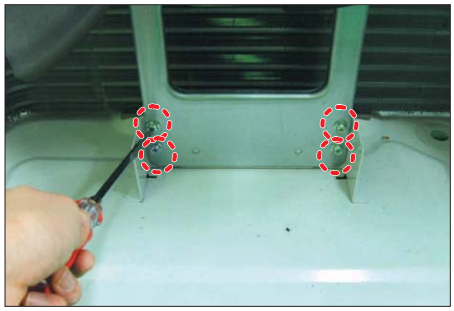
3	Heat Exchanger & Compressor	1) Release the refrigerant at first. 2) Disassemble the Inlet and Outlet Pipe by welding. 3) Loosen the fixing screw of the Heat Exchanger. (Use +Screw Driver.) 4) Detach the Heat Exchanger.	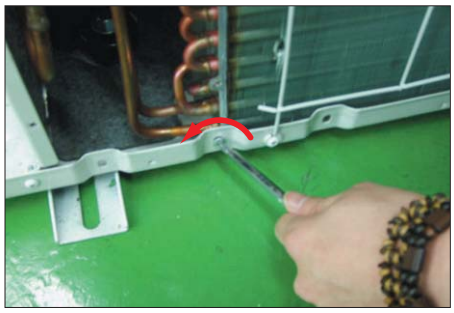
		5) Loosen 3 nuts of the Compressor. (Use Monkey Spanner.) 6) Detach the Compressor.	

4. Troubleshooting

4-1 Display Error and Check Method

4-1-1 Indoor unit

■ **MH✳✳✳FVEA/MH✳✳✳FBEA/MH✳✳✳FAEA**

Display	Explanation	Main checking Point / Remark
E1↔01	Communication error (unable to receive data)	Communication cable connection
E1↔02	Communication error (outdoor cannot communicate)	Another indoor unit or indoor PCB
E1↔21	Indoor unit room temperature sensor error (Open/Short)	Room temperature sensor, indoor PCB
E1↔22	Indoor unit heat exchanger in temperature sensor error (Open/Short)	Heat exchanger in sensor, indoor PCB
E1↔23	Indoor unit heat exchanger out temperature sensor error (Open/Short)	Heat exchanger out sensor, indoor PCB
E1↔28	Indoor unit heat exchanger in temperature sensor detached	Heat exchanger in sensor
E1↔29	Indoor unit heat exchanger out temperature sensor detached	Heat exchanger out sensor
E1↔30	Indoor unit heat exchanger in & out temperature sensor detached	Heat exchanger in & out sensor
E1↔53	Indoor unit float switch second detection	-
E1↔54	Indoor unit fan motor malfunction	Fan motor and cable
E1↔61	More than 2 indoor units cool and heat simultaneously	Another indoor unit operation mode
E1↔62	EEPROM error	Indoor PCB
E1↔63	Option code setting error	Option code
E1↔85	Cable miss-wiring	Cable connection (Indoor & Outdoor unit)
E1↔86	MPI error malfunction	MPI
E2↔01	The number of indoor unit mismatched	Cable connection (another indoor unit & outdoor unit), SW01(outdoor)
E2↔51	Compressor discharge sensor error(Short/Open)	Outdoor unit
E5↔59	Outdoor unit error	Outdoor unit (Error code)

■ **MH✳✳✳FNEA**

Description	Indicators			Main Checking Point
	OPERATION	TIMER	TURBO	
	≋	⏲	TURBO	
Indoor unit room temperature sensor error (open or short)	○	◑	○	-
Indoor unit heat exchanger temperature sensor error (open or short)	◑	◑	○	-
Indoor fan motor malfunction	○	○	◑	-
EEPROM error	◑	◑	◑	Option Setting
Option error (option wasn t set up or option data error)	◑	◑	◑	Option Setting
Outdoor unit error	◑	○	◑	Remote Control on/off Outdoor Unit Power Reset
Indoor unit communication error	×	◑	◑	
Outdoor unit communication error	◑	×	◑	
Simultaneous operation error	○	◑	◑	

○ : On ◑ : Flickering × : Off

◆ If you turn off the air conditioner when the LED is flickering, the LED is also turned off.

■ **MH✳✳✳FSEA/MH✳✳✳FMEA**

Abnormal conditions		Indicators					Operating
		Green	Red	Yellow	Green	Orange	
	MH✳✳✳FSEA						
	MH✳✳✳FMEA						
Power reset		◑	×	×	×	×	
Error of temperature sensor in indoor unit (OPEN/SHORT)		×	×	◑	×	×	
Error of heat exchanger sensor in indoor unit Error of heat exchanger OUT sensor in indoor unit Error of outlet temperature sensor in indoor unit (OPEN/SHORT): For heat pump models only		◑	×	◑	×	×	
Error of mixed operation		×	◑	×	◑	×	
Error of indoor fan motor : Below 450RPM for 15 minutes		×	×	×	◑	×	
Error of outdoor temperature sensor Error of CONDENSER sensor Error of DISCHARGE sensor		◑	×	×	◑	×	
1. No communication for 2 minutes between indoor unit and outdoor unit (communication error for more than 2 minutes) 2. Indoor unit receiving the communication error from outdoor unit 3. Outdoor unit tracking 3 minutes error 4. When sending the communication error from outdoor unit due to the mismatching of the communication numbers and installed numbers after completion of tracking (communication error for more than 2 minutes)		×	×	◑	◑	×	Error of indoor unit: Displayed on the indoor unit regardless of operation
1. 2nd detection of refrigerant completely leak 2. 2nd detection of high temperature CONDENSER 3. 2nd detection of high temperature DISCHARGE 4. Compressor down due to 6th detection of freezing		×	×	◑	◑	◑	Displayed on appropriate indoor unit which is operating Displayed on outdoor unit
Error of float switch		×	×	×	◑	◑	
Error of setting option switches for optional accessories		×	×	◑	×	◑	
EEPROM error		◑	×	◑	◑	×	
EEPROM option error		◑	◑	◑	◑	◑	

○ : On ◑ : Flickering × : Off

◆ If you turn off the air conditioner when the LED is flickering, the LED is also turned off.

■ MH✳✳✳FJEA

Abnormal conditions	LED lamp display					Remarks
	White					
	MPI					
Power reset	×	×	×	×	◑	
Error of temperature sensor in the indoor unit (Open/Short)	×	×	◑	×	×	
Error of heat exchanger sensor in the indoor unit	×	×	◑	×	◑	
Error of the outdoor temperature sensor Error of the condensor temperature sensor Error of the discharge temperature sensor	×	◑	×	×	◑	
1. No communication between indoor and outdoor unit for 2 minutes 2. Error on the communication received from outdoor unit 3. Outdoor unit tracking time out (3 minutes) 4. Number of installation does not match after tracking	×	◑	◑	×	×	1. Indoor unit error (Display is unrelated with operation) 2. Outdoor unit error (Display is unrelated with operation)
Indoor fan motor is non-operative Indoor fan motor is operating slowly Indoor fan motor is operates at an excessive speed	×	◑	×	×	×	Indoor motor fan error
Simultaneous cooling/heating operation error (Multi model only)	×	◑	×	◑	×	
[Self diagnosis]Power voltage detection between indoor and outdoor unit communication cable [Self diagnosis]Outdoor unit refrigerant leakage(Gas leak) [Self diagnosis]Outdoor fan restriction error [Inverter]Inverter compressor operation failure [Inverter] DC peak error [Inverter]DC Link voltage 150V or less,410V or more [Inverter] Compressor rotation error [Inverter]Electric current error [Inverter]DC Link sensor error [Inverter]EEPROM READ/WRITE error [Inverter]Inverter zerocrossing error Setting the outdoor unit capacity option error	◑	◑	◑	×	×	
EEPROM error	×	◑	◑	×	◑	
EEPROM option error	◑	◑	◑	◑	◑	
MPI no feedback Error	◑	×	×	×	×	

○ : On ◑ : Flickering × : Off

◆ If you turn off the air conditioner when the LED is flickering, the LED is also turned off.

■ **NJ✳✳✳LHXEA/MH✳✳✳FUEA**

The error indicated on the LED display of Indoor unit

Abnormal conditions	Indicators					Operating
	Concealed Type					
	Blue	Red				
	Standard Type					
Power reset	◑	×	×	×	×	
Error of temperature sensor in indoor unit(OPEN/SHORT)	×	×	◑	×	×	Displayed on appropriate indoor unit which is operating
Error of heat exchanger sensor in indoor unit Error of heat exchanger OUT sensor in indoor unit Error of outlet temperature sensor in indoor unit (OPEN/SHORT): For heat pump models only	◑	×	◑	×	×	Displayed on appropriate indoor unit which is operating
Error of mixed operation	×	◑	×	◑	×	
Error of outdoor temperature sensor Error of COND sensor Error of DISCHARGE sensor	◑	×	×	◑	×	Displayed on appropriate indoor unit which is operating Displayed on outdoor unit
1. No communication for 2 minutes between indoor unit and outdoor unit (communication error for more than 2 minutes) 2. Indoor unit receiving the communication error from outdoor unit 3. Outdoor unit tracking 3 minutes error 4. When sending the communication error from outdoor unit the mismatching of the communication numbers and installed numbers after completion of tracking. (communication error for more than 2 minutes)	×	×	◑	◑	×	1. Error of indoor unit : Displayed on the indoor unit regardless of operation 2. Error of outdoor unit : Displayed on the indoor unit which is operating
Self-diagnostic error (including the indoor unit not detected) 1. Error of electronic expansion valve close 2. Error of electronic expansion valve open 3. Breakaway of EVA OUT sensor 4. Breakaway of EVA IN sensor 5. Breakaway of COND MID sensor 6. 2nd detection of refrigerant completely leak 7. 2nd detection of high temperature COND 8. 2nd detection of high temperature DISCHARGE 9. COMP DOWN due to 2nd detection of low pressure switch 10. Error of reverse phase 11. Compressor down due to 6th detection of freezing 12. Self-diagnosis of condensation sensor (G8, G9) 13. Compressor down due to condensation ratio control	×	×	◑	◑	◑	Displayed on appropriate indoor unit which is operating Displayed on outdoor unit
Error of float switch	×	×	×	◑	◑	
Error of setting option switches for optional accessories	×	×	◑	×	◑	
EEPROM error	◑	×	◑	◑	×	
EEPROM option error	◑	◑	◑	◑	◑	

○ : On ◑ : Flickering × : Off

◆ If you turn off the air conditioner when the LED is flickering, the LED is also turned off.

◆ If you re-operate the air conditioner, it operates normally at first, then detect an error again.

4-1-2 Ourdoor Unit

DISPLAY	EXPLANATION (The error indicated on the PCB display of outdoor unit)	REMARK
E1 01	Communiaction error(indoor unable to receive data)	Check electrical connection and setting
E1 02	Outdoor unit communication error(Abnormal data from indoor unit over 60 packet)	Check electrical connection and setting
E1 21	Indoor unit room temperature sensor error (Open/Short)	
E1 22	Indoor unit heat exchanger in temperature sensor error (Open/Short)	
E1 23	Indoor unit heat exchanger out temperature sensor error (Open/Short)	
E1 28	Indoor unit sensor error-Evaporator pipe in sensor - Self diagnosis	
E1 29	Indoor unit sensor error-Evaporator pipe out sensor - Self diagnosis	
E1 54	Indoor Unit FAN Error	
E1 61	More than two indoor units cool and heat simultaneously	
E1 62	Indoor Unit EEPROM Error	
E1 63	Indoor Unit EEPROM Option Error	
E1 90	Failure of pipe check operation	Check piping connection and setting
E1 99	No pipe check operation check - occasion : try to operation after the installation through auto addressing mode without pipe check operation.	Check setting
E2 01	The number of Indoor unit mismatched	Check electrical connection and setting
E2 02	Communication error between the outdoor and indoor unit	Check electrical connection and setting
E2 03	Outdoor communication error between main PCB and sub PCB	
E2 21	Outside temperature sensor error(Short/Open) - Error level: over 4.9V(-50°C) under 0.4V(93°C)	
E2 37	Condenser temperature sensor error(Short/Open) - Error level: over 4.9V(-50°C) under 0.4V(93°C)	
E2 46	Outdoor unit sensor error - Condenser out sensor(Short/Open) - Self diagnosis	
E2 51	Compressor Discharge temperature sensor error	
E2 61	Compressor discharge sensor detached - Self diagnosis	
E3 20	Compressor OLP sensor error (Short/Open) - Error condition : outdoor temperature under -20°C - Error level : over 4.95V(-30°C) under 0.5V(151°C)	
E3 30	EvaIn1 Sensor Short/Open	
E3 31	EvaIn2 Sensor Short/Open	
E3 32	EvaIn3 Sensor Short/Open	
E3 33	EvaIn4 Sensor Short/Open	
E3 34	EvaIn5 Sensor Short/Open	
E3 35	EvaOut1 Sensor Short/Open	
E3 36	EvaOut2 Sensor Short/Open	
E3 37	EvaOut3 Sensor Short/Open	
E3 38	EvaOut4 Sensor Short/Open	
E3 39	EvaOut5 Sensor Short/Open	

Ourdoor Unit(cont.)

DISPLAY	EXPLANATION (The error indicated on the PCB display of outdoor unit)	REMARK
E4 01	Outdoor unit freezing(Compressor stop)	check pipe lenght, indoor unit filter, refrigerant leakage/charge and service port
E4 04	Outdoor unit overload - Safety control(Compressor stop)	check pipe lenght, refrigerant leakage/charge
E4 16	Outdoor unit high discharge temperature - Safety control (Compressor stop)	check pipe lenght, refrigerant leakage/charge
E4 19	Outdoor unit EEV open (Stopped indoor unit's) -Self diagnosis	
E4 22	Outdoor unit EEV open (operating indoor unit's) -Self diagnosis	
E4 40	High temperature(over 30°C) of outdoor as heating mode	
E4 41	Low temperature(under -10°C) of outdoor as cooling mode	
E4 58	Outdoor Fan Error	
E4 60	Communication cable mismatched between indoor and outdoor unit	Check electrical connection
E4 61	Inverter compressor starting failure (5 times)	
E4 62	Compressor trip by input current control mode (PFC over current)	
E4 63	Compressor trip by OLP temperature control mode	
E4 64	Over current	
E4 65	Compressor Vlimit Error	
E4 66	DC link Voltage error (under 150V, over 410V)	
E4 67	Abnormal compressor running (Compressor Rotation Error)	
E4 68	Current sensor error	
E4 69	DC link Voltage sensor error	
E4 71	OTP Error	
E4 72	Inverter micom zero-crossing error	

4-2 Setting Option Setup Method

ex)Option No. : 045770- 1c8000

Step 1 : Enter the Option Setup mode.

1st Take out the batteries of remote control.

2nd Press the temperature button simultaneously and insert the battery again.

3rd Make sure the remocon display shown as .

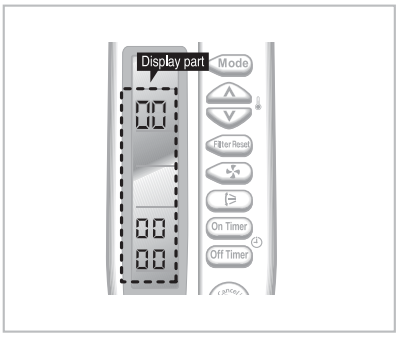

Step 2 : Enter the Option Setup mode and select your option according to the following procedure.

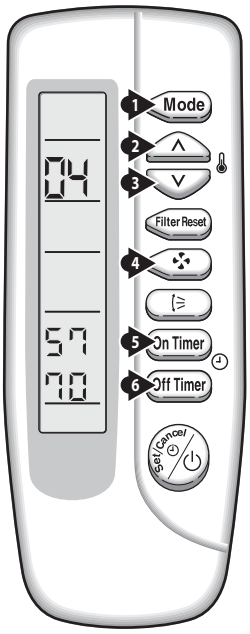

* Setting is not required if you must a value which has a default.

1

The default value is .
Otherwise, push the Mode button to .
Every time you push the button, the display panel reads 1 or 0 repeatedly.

2

Push the button to set the display panel to 4 .
Every time you push the button, the display panel reads 0 ➡ 1 ➡ 2 ➡ 3 ➡ … 9 ➡ A ➡ b ➡ c ➡ d ➡ E ➡ F repeatedly.

3

Push the button to set the display panel to 5 .
Every time you push the button, the display panel reads 0 ➡ 1 ➡ 2 ➡ 3 ➡ … 9 ➡ A ➡ b ➡ c ➡ d ➡ E ➡ F repeatedly.

4

Push the button to set the display panel to 7.
Every time you push the button, the display panel reads 0 ➡ 1 ➡ 2 ➡ 3 ➡ … 9 ➡ A ➡ b ➡ c ➡ d ➡ E ➡ F repeatedly.

5

Push the On Timer button to set the display panel to 7.
Every time you push the button, the display panel reads 0 ➡ 1 ➡ 2 ➡ 3 ➡ … 9 ➡ A ➡ b ➡ c ➡ d ➡ E ➡ F repeatedly.

6

Push the button to set the display panel to 0 .
Every time you push the button, the display panel reads 0 ➡ 1 ➡ 2 ➡ 3 ➡ … 9 ➡ A ➡ b ➡ c ➡ d ➡ E ➡ F repeatedly.

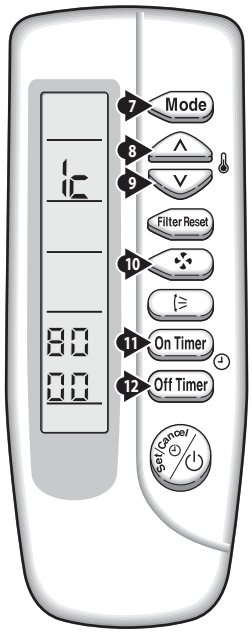

* Setting is not required if you must 0 a value which has a 0 default.

7

Press Mode button, then the default value is 00 00 00 .

8

Push the button to set the display panel to c .
Every time you push the button, the display panel reads 0 ➡ 1 ➡ 2 ➡ 3 ➡ … 9 ➡ A ➡ b ➡ c ➡ d ➡ E ➡ F repeatedly.

9

Push the button to set the display panel to 8 .
Every time you push the button, the display panel reads 0 ➡ 1 ➡ 2 ➡ 3 ➡ … 9 ➡ A ➡ b ➡ c ➡ d ➡ E ➡ F repeatedly.

10

Push the button to set the display panel to 0 .
Every time you push the button, the display panel reads 0 ➡ 1 ➡ 2 ➡ 3 ➡ … 9 ➡ A ➡ b ➡ c ➡ d ➡ E ➡ F repeatedly.

11

Push the button to set the display panel to 0 .
Every time you push the button, the display panel reads 0 ➡ 1 ➡ 2 ➡ 3 ➡ … 9 ➡ A ➡ b ➡ c ➡ d ➡ E ➡ F repeatedly.

12

Push the button to set the display panel to 0 .
Every time you push the button, the display panel reads 0 ➡ 1 ➡ 2 ➡ 3 ➡ … 9 ➡ A ➡ b ➡ c ➡ d ➡ E ➡ F repeatedly.

Step 3 : Upon completion of the selection, check you made right selections.

Press the Mode Selection key, Mode to set the display part to 0 and check the display part.

➡ The display part shows 02 57 00 .

Press the Mode Selection key, Mode set the display part to 1 and check the display part.

➡ The display part shows 1c 80 00 .

Step 4 : Pressing the ON/OFF button( )

When pressing the operation ON/OFF key with the direction of remote control for unit, the sound "Ding" or "Diriring" is heard and the OPERATION ICON( ) lamp of the display is flickering at the same time, then the input of option is completed. (If the diriring sound isn't heard, try again pressing the ON/OFF button.)

Step 5 : Unit operation test-run

First, Remove the battery from the remote control.

Second, Re-insert the battery into the remote control.

Third, Press ON/OFF button( ) with the direction of remote control for set.

• Error Mode

1st	If all lamps of indoor unit are flickering, Plug out, plug in power plug again and press ON/OFF key to retry.
2nd	If the unit is not working properly or all lamps are continuously flickering after setting the option code, see if the correct option code is set up for its model.

ex) Option No. : 066064- 170373

Step 1 : **Enter the Option Setup mode.**

1st Take out the batteries of remote control.

2nd Press the temperature button simultaneously and insert the battery again.

3rd Make sure the remocon display shown as 00 00 00 .

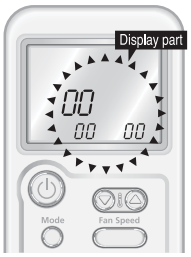

Step 2 : **Enter the Option Setup mode and select your option according to the following procedure.**

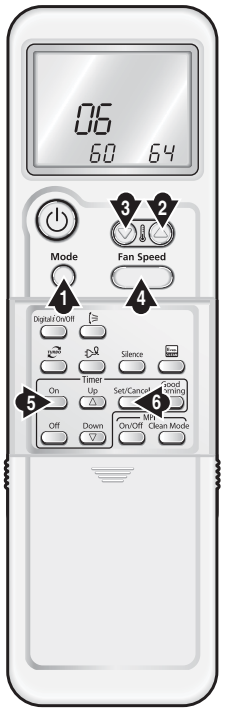

✳ Setting is not required if you must 0 a value which has a 0 default.

1

The default value is 00 00 00 .
Otherwise, push the Mode button to 0 .
Every time you push the button, the display panel reads 1 or 0 repeatedly.

2

Push the button to set the display panel to 6 .
Every time you push the button, the display panel reads 0 ➡ 1 ➡ 2 ➡ 3 ➡ · · · 9 ➡ A ➡ b ➡ c ➡ d ➡ E ➡ F repeatedly.

3

Push the button to set the display panel to 6 .
Every time you push the button, the display panel reads 0 ➡ 1 ➡ 2 ➡ 3 ➡ · · · 9 ➡ A ➡ b ➡ c ➡ d ➡ E ➡ F repeatedly.

4

Push the Fan Speed button to set the display panel to 0 .
Every time you push the button, the display panel reads 0 ➡ 1 ➡ 2 ➡ 3 ➡ · · · 9 ➡ A ➡ b ➡ c ➡ d ➡ E ➡ F repeatedly.

5

Push the On button to set the display panel to 6 .
Every time you push the button, the display panel reads 0 ➡ 1 ➡ 2 ➡ 3 ➡ · · · 9 ➡ A ➡ b ➡ c ➡ d ➡ E ➡ F repeatedly.

6

Push the Set/Cancel button to set the display panel to 4 .
Every time you push the button, the display panel reads 0 ➡ 1 ➡ 2 ➡ 3 ➡ · · · 9 ➡ A ➡ b ➡ c ➡ d ➡ E ➡ F repeatedly.

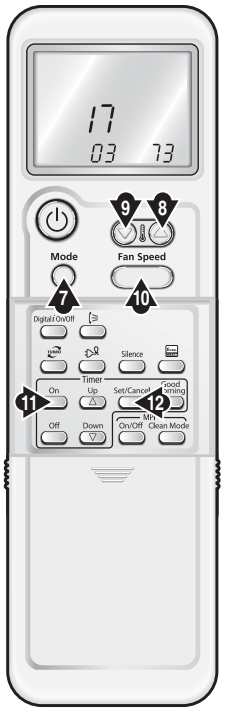

✳ Setting is not required if you must 0 a value which has a 0 default.

7 Press Mode button, then the default value is 00 10 00 .

8 Push the △ button to set the display panel to 7 .
Every time you push the button, the display panel reads 0 ➡ 1 ➡ 2 ➡ 3 ➡ · · · 9 ➡ A ➡ b ➡ c ➡ d ➡ E ➡ F repeatedly.

9 Push the ▽ button to set the display panel to 0 .
Every time you push the button, the display panel reads 0 ➡ 1 ➡ 2 ➡ 3 ➡ · · · 9 ➡ A ➡ b ➡ c ➡ d ➡ E ➡ F repeatedly.

10 Push the Fan Speed button to set the display panel to 3 .
Every time you push the button, the display panel reads 0 ➡ 1 ➡ 2 ➡ 3 ➡ · · · 9 ➡ A ➡ b ➡ c ➡ d ➡ E ➡ F repeatedly.

11 Push the On button to set the display panel to 7 .
Every time you push the button, the display panel reads 0 ➡ 1 ➡ 2 ➡ 3 ➡ · · · 9 ➡ A ➡ b ➡ c ➡ d ➡ E ➡ F repeatedly.

12 Push the Set/Cancel button to set the display panel to 3 .
Every time you push the button, the display panel reads 0 ➡ 1 ➡ 2 ➡ 3 ➡ · · · 9 ➡ A ➡ b ➡ c ➡ d ➡ E ➡ F repeatedly.

Step 3 : Upon completion of the selection, check you made right selections.

Press the Mode Selection key, Mode to set the display part to 0 and check the display part.

➡ The display part shows 06 60 64 .

Press the Mode Selection key, Mode to set the display part to 1 and check the display part.

➡ The display part shows 17 03 73 .

Step 4 : Pressing the ON/OFF button (⏻)

When pressing the operation ON/OFF key with the direction of remote control for unit, the sound "Ding" or "Diriring" is heard and the OPERATION ICON(≋) lamp of the display is flickering at the same time, then the input of option is completed. (If the diriring sound isn't heard, try again pressing the ON/OFF button.)

Step 5 : Unit operation test-run

First, Remove the battery from the remote control.
Second, Re-insert the battery into the remote control.
Third, Press ON/OFF key with the direction of remote control for set.

• Error Mode

1st If all lamps of indoor unit are flickering, plug out, plug in power plug again and press the ON/OFF key to retry.
2nd If the unit is not working properly or all lamps are continuously flickering after setting the option code, see if the correct option code is set up for its model.

ex) Option No. : 65 80 37 02 38

Step 1 : Enter the Option Setup mode.

1st Take out the batteries of remote control.

2nd Press the temperature button simultaneously and insert the battery again.

3rd Make sure the remote contr display shown as .

Step 2 : Enter the Option Setup mode and select your option according to the following procedure.

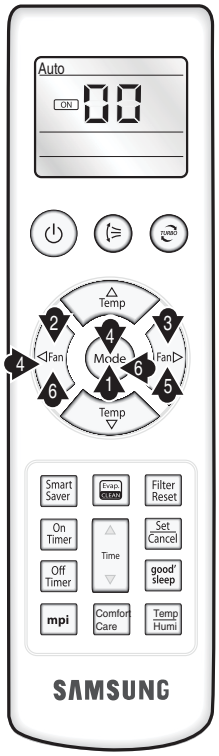

	Feature	Display
1	The default value is . Every time you push the Mode button, the display panel reads ON Auto ➡ Cool ➡ Dry ➡ Fan ➡ Heat , OFF Auto ➡ Cool ➡ Dry ➡ Fan ➡ Heat repeatedly.	Auto ON 00
2	Push the button to set the display panel to 6. Every time you push the button, the display panel reads 0➡1➡2➡3➡ ..... ➡9➡A➡b➡c➡d➡E➡F repeatedly.	Auto ON 60
3	Push the button to set the display panel to 5. Every time you push the button, the display panel reads 0➡1➡2➡3➡ ..... ➡9➡A➡b➡c➡d➡E➡F repeatedly.	Auto ON 65
4	Push the Mode button to . Push the button to set the display panel to 8. Every time you push the button, the display panel reads 0➡1➡2➡3➡ ..... ➡9➡A➡b➡c➡d➡E➡F repeatedly.	Cool ON 80
5	Push the button to set the display panel to 0. Every time you push the button, the display panel reads 0➡1➡2➡3➡ ..... ➡9➡A➡b➡c➡d➡E➡F repeatedly.	Cool ON 80
6	Push the Mode button to . Push the button to set the display panel to 3. Every time you push the button, the display panel reads 0➡1➡2➡3➡ ..... ➡9➡A➡b➡c➡d➡E➡F repeatedly.	Dry ON 30

	Feature	Display
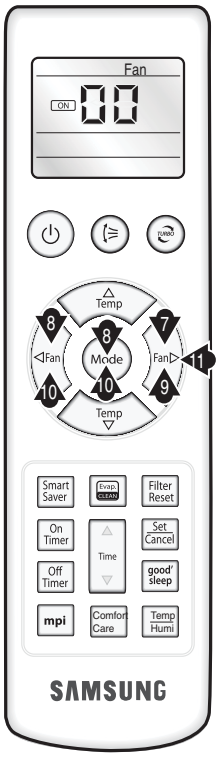	7 Push the button to set the display panel to 7. Every time you push the button, the display panel reads 0 ➡ 1 ➡ 2 ➡ 3 ➡ ..... ➡ 9 ➡ A ➡ b ➡ c ➡ d ➡ E ➡ F repeatedly.	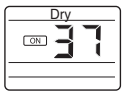
	8 Push the Mode button to . Push the button to set the display panel to 0 . Every time you push the button, the display panel reads 0 ➡ 1 ➡ 2 ➡ 3 ➡ ..... ➡ 9 ➡ A ➡ b ➡ c ➡ d ➡ E ➡ F repeatedly.	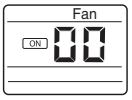
	9 Push the button to set the display panel to 2 . Every time you push the button, the display panel reads 0 ➡ 1 ➡ 2 ➡ 3 ➡ ..... ➡ 9 ➡ A ➡ b ➡ c ➡ d ➡ E ➡ F repeatedly.	
	10 Push the Mode button to . Push the button to set the display panel to 3. Every time you push the button, the display panel reads 0 ➡ 1 ➡ 2 ➡ 3 ➡ ..... ➡ 9 ➡ A ➡ b ➡ c ➡ d ➡ E ➡ F repeatedly.	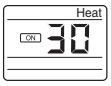
	11 Push the button to set the display panel to 8. Every time you push the button, the display panel reads 0 ➡ 1 ➡ 2 ➡ 3 ➡ ..... ➡ 9 ➡ A ➡ b ➡ c ➡ d ➡ E ➡ F repeatedly.	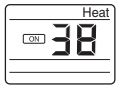

Step 3 : Upon completion of the selection, check you made right selections.

Press the Mode Selection key to set the display part and check the display part.

➡ The display part shows like below when each time you press Mode button .

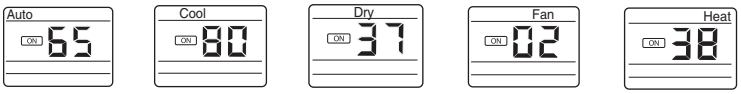

Step 4 : Pressing the ON/OFF button ( )

When pressing the operation ON/OFF key with the direction of remote control for unit, the sound ííDingíí or ííDiriringíí is heard and the OPERATION ICON ( ) lamp of the display is flickering at the same time, then the input of option is completed. (If the diriring sound isnít heard, try again pressing the ON/OFF button.)

Step 5 : Unit operation test-run

First, Remove the battery from the remote control.

Second, Re-insert the battery into the remote control.

Third, Press ON/OFF key with the direction of remote control for set.

● **Error Mode**

1st If all lamps of indoor unit are flickering, Plug out, plug in power plug again and press ON/OFF key to retry.

2nd If the unit is not working properly or all lamps are continuously flickering after setting the option code, see if the correct option code is set up for its model.

ex) Option No. : 30 00 07 C2 6C 83 10 00 00 00

Step 1 : Enter the Option Setup mode.

1st Take out the batterie of remote control.

2nd Press the temperature button simultaneously and insert the battery again.

3rd Make sure the remote contr display shown as .

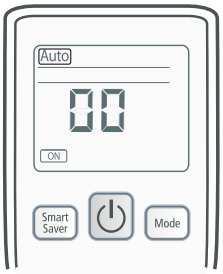

Step 2 : Enter the Option Setup mode and select your option according to the following procedure.

Feature	Display
1 The default value is . Every time you push the Mode button, the display panel reads ON Auto ⇒ Cool ⇒ Dry ⇒ Fan ⇒ Heat , OFF Auto ⇒ Cool ⇒ Dry ⇒ Fan ⇒ Heat repeatedly.	Auto 00 ON
2 Push the button to set the display panel to 3. Every time you push the button, the display panel reads 0 ⇒ 1 ⇒ 2 ⇒ 3 ⇒ ..... ⇒ 9 ⇒ A ⇒ b ⇒ c ⇒ d ⇒ E ⇒ F repeatedly.	Auto 30 ON
3 Push the Mode button to . Every time you push the button, the display panel reads 0 ⇒ 1 ⇒ 2 ⇒ 3 ⇒ ..... ⇒ 9 ⇒ A ⇒ b ⇒ c ⇒ d ⇒ E ⇒ F repeatedly.	Cool 00 ON
4 Push the Mode button to . Push the button to set the display panel to 7. Every time you push the button, the display panel reads 0 ⇒ 1 ⇒ 2 ⇒ 3 ⇒ ..... ⇒ 9 ⇒ A ⇒ b ⇒ c ⇒ d ⇒ E ⇒ F repeatedly.	Dry 07 ON
5 Push the Mode button to . Push the button to set the display panel to C . Every time you push the button, the display panel reads 0 ⇒ 1 ⇒ 2 ⇒ 3 ⇒ ..... ⇒ 9 ⇒ A ⇒ b ⇒ c ⇒ d ⇒ E ⇒ F repeatedly.	Fan C0 ON
6 Push the button to set the display panel to 2. Every time you push the button, the display panel reads 0 ⇒ 1 ⇒ 2 ⇒ 3 ⇒ ..... ⇒ 9 ⇒ A ⇒ b ⇒ c ⇒ d ⇒ E ⇒ F repeatedly.	Fan C2 ON

	Feature	Display
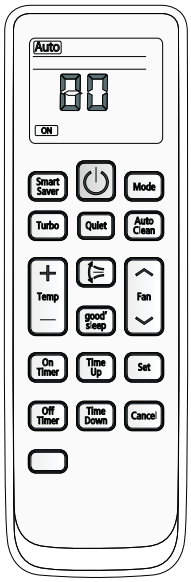	7 Push the Mode button to Heat 00 . Push the button to set the display panel to 6. Every time you push the button, the display panel reads 0⇒1⇒2⇒3⇒ ..... ⇒9⇒A⇒b⇒c⇒d⇒E⇒F repeatedly.	Heat 60 ON
	8 Push the button to set the display panel to 8. Every time you push the button, the display panel reads 0⇒1⇒2⇒3⇒ ..... ⇒9⇒A⇒b⇒c⇒d⇒E⇒F repeatedly.	Heat 6C ON
	9 Push the Mode button to Auto 00 . Push the button to set the display panel to 8. Every time you push the button, the display panel reads 0⇒1⇒2⇒3⇒ ..... ⇒9⇒A⇒b⇒c⇒d⇒E⇒F repeatedly.	Auto 80 OFF
	10 Push the button to set the display panel to 3. Every time you push the button, the display panel reads 0⇒1⇒2⇒3⇒ ..... ⇒9⇒A⇒b⇒c⇒d⇒E⇒F repeatedly.	Auto 83 OFF
	11 Push the Mode button to Cool 00 . Push the button to set the display panel to 1. Every time you push the button, the display panel reads 0⇒1⇒2⇒3⇒ ..... ⇒9⇒A⇒b⇒c⇒d⇒E⇒F repeatedly.	Cool 10 OFF
	12 Push the Mode button to Dry 00 .	Dry 00 OFF
	13 Push the Mode button to Fan 00 .	Fan 00 OFF
	14 Push the Mode button to Heat 00 .	Heat 00 OFF

Step 3 : Upon completion of the selection, check you made right selections.

Press the Mode Selection key to set the display part and check the display part.

➡ The display part shows like below when each time you press Mode button .

Step 4 : Pressing the ON/OFF button ( )

When pressing the operation ON/OFF key with the direction of remote control for unit, the sound "Ding" is heard and the OPERATION ICON( ) lamp of the display is flickering at the same time, then the input of option is completed. (If the diriring sound isn't heard, try again pressing the ON/OFF button.)

Step 5 : Unit operation test-run

First, Remove the battery from the remote control.

Second, Re-insert the battery into the remote control.

Third, Press ON/OFF key with the direction of remote control for set.

• Error Mode

1st If all lamps of indoor unit are flickering, Plug out, plug in power plug again and press ON/OFF key to retry.

2nd If the unit is not working properly or all lamps are continuously flickering after setting the option code, see if the correct option code is set up for its model.

■ Table of the option code

MODEL	OPTION CODE
MH020FNEA	026402-13225E-200000-300000
MH026FNEA	027402-14221A-200000-300000
MH035FNEA	027402-16224d-200000-300000
MH052FNEA	026402-19228F-200000-300000
MH023FBEA MH026FBEA	016402-142209-200000-300000
MH035FBEA	016402-16223c-200000-300000
MH052FBEA	016406-19224E-200000-300000
MH020FVEA	007402-132219-200000-300000
MH026FVEA	004402-1420E7-200000-300000
MH035FVEA	007402-16221A-200000-300000
MH052FVEA	005406-19225E-200000-300000
MH020FAEA	047402-16223c-200000-300000

MODEL	OPTION CODE
MH026FAEA	047402-14221c-200000-300000
MH035FAEA	047402-1320E9-200000-300000
MH052FAEA	047406-19223E-200000-300000
MH026FSEA	078605-1420F8-200000-300000
MH035FSEA	075605-16225d-200000-300000
MH030FMEA MH035FMEA	045023-16415b-200000-300000
MH052FMEA	045024-1940d0-200000-300000
MH026FJEA	087417-1400b6-200000-300000
MH035FJEA	087417-1600d8-200000-300000
MH052FJEA	087417-1900F9-200000-300000

TYPE	MODEL	Option Code
MALDIVES	AQV07PSBN	011305-1740E9-271416-372500-03403D-112E3F
	AQV09PSBN	011305-17421D-271921-372500-03403D-112E3F
	AQV12PSBN	011305-17423D-272328-372500-034B46-11474D
	AQV18PSBN	012305-17421D-27323C-372600-034743-113F47
	AQV24PSBN	012305-17427B-27444E-378200-034C4B-104442
JUNGFRAU	AQV09YWAN	010345-17C0F5-271920-372500-033B32-102A3C
	AQV12YWAN	010345-15C215-272328-352500-03453F-10404E
	AQV18YWAN	010345-15C20A-27323C-384500-034740-104248

External Static Pressure (mmAq)	1.0	2.0(Standard)	3.0	4.0
NJ026LHXEA	015201-1400Fb -200000-300000	015201-14020c -200000-300000	015201-140360 -200000-300000	015201-1403A2 -200000-300000
NJ035LHXEA	015201-16025d -200000-300000	015201-16026E -200000-300000	015201-1603c4 -200000-300000	015203-160108 -200000-300000

External Static Pressure (mmAq)	0.0	2.0	4.0(Standard)	6.0
MH052FUEA	012221-194247 -200000-300000	012221-194360 -200000-300000	012221-1943A2 -200000-300000	012223-194105 -200000-300000

◆ If you are going to use up to SEG 24, please refer to following instruction.

SEG 18 :

	Not in use	Use
Change temperature display	0(Celsius)	1(Fahrenheit)
Sound Mute	0	2

✳ If you want to use multiple functions, add each of the 'use' value of the function you want to used and input the final addition as option value. (Use Fahrenheit + Sound mute : 1 + 2 = 3)

Ex) 044217-1d00e6-200000-300000
When using Sound mute : 044217-1d00e6-200002-300000
When using Fahrenheit and Sound mute : 044217-1d00e6-200003-300000

4-3 Items to be checked first

1. The input voltage should be rating voltage ±10% range.
   The air conditioner may not operate properly if the voltage is out of this range.

2. Is the link cable linking the indoor unit and the outdoor unit linked properly?
   The indoor unit and the outdoor unit shall be linked by 4 cables.
   Check the terminals if the indoor unit and outdoor unit are properly linked by the same number of cables.
   Otherwise the air conditioner may not operate properly.

3. When a problem occurs due to the contents illustrated in the table below it is a symptom not related to the malfunction of the air conditioner.

No	Operation of air conditioner	Explanation
1	In a COOL operation mode, the compressor does not operate at a room temperature higher than the setting temperature that the INDOOR FAN should operate. In a HEAT operation mode, the compressor does not operate at a room temperature lower than the setting temperature that indoor fan should operate.	In happens after a delay of 3 minutes when the compressor is reoperated. The same phenomenon occurs when a power is on. As a phenomenon that the compressor is reoperated after a delay of 3 minutes, the indoor fan is adjusted automatically with reference to a temperature of the air blew
2	Fan speed setting is not allowed in AUTO(Auto) or DRY( ) mode.	The speed of the indoor fan is set to LL in DRY mode. Fan speed is 5 steps and is selected automatically in AUTO mode.
3	Compressor stops operation intermittently in DRY( ) mode.	Compressor operation is controlled automatically in DRY mode depending on the room temperature and humidity.
4	Compressor of the outdoor unit is operating although it is turned off in a HEAT mode.	When the unit is turned off while de-ice is activated, the compressor continues operation for up to 12 minutes (maximum) until the deice is completed.
5	Timer LED( ) only of the indoor unit lights up and the air conditioner does not operate.	Timer is being activated and the unit is in ready mode. The unit operates normally if the timer operation is cancelled.
6	The compressor and indoor fan stop intermittently in HEAT mode.	The compressor and indoor fan stop intermittently if room temperature exceeds a setting temperature in order to protect the compressor from overheated air in a HEAT mode.
7	Indoor fan and outdoor fan stop operation intermittently in a HEAT mode.	The compressor operates in a reverse cycle to remove exterior ice in a HEAT mode, and indoor fan and outdoor fan do not operate intermittently for within 20% of the total heater operation.
8	The compressor stops intermittently in a COOL mode or DRY mode, and fan speed of the indoor unit decreases.	The compressor stops intermittently or the fan speed of the indoor unit decreases to prevent inside/outside air frozen depending on the inside/outside air temperature.

4-4 Checking and Testing operations

To complete the installation, perform the following checks and tests to ensure that the air conditioner is operating correctly.

1. Review all the following elements in the installation:
   - Installation site strength
   - Piping connection tightness not to leak any gas
   - Connection wiring
   - Heat-resistant insulation of the piping
   - Drainage
   - Earthing wire connection
   - Setting number of the indoor unit installed (Outdoor unit SW)
   - Setting SW02 for addressing mode (AUTO or MANUAL)
   - Address number on each indoor unit (Manual addressing mode)
   - Correct operation for pipe checking connection (follow the step below)
   - If the auto addressing, refer to next page.
   - If the manual addressing, please do cool mode try-run or heat mode try-run.(refer to below)

■ **Settings of PCB Display of the Outdoor unit**

-K1 :pipe checking operation button -K2 :Function button

-K3 :Reset button -K4 :View mode change button

Key / Push	K1	K2	K3	K4
1	Pipe Checking Operation (Display: H5)	Heat Mode Try run (Display: H1)	Reset	View mode change
2	-	Refrigerant Charging (Display: H2)		
3	-	Cool Mode Try run (Display: H3)		
4	-	Pump down (Display: H4)		

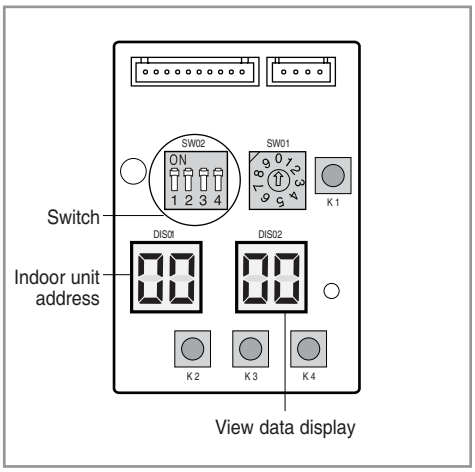

Outdoor PCB Display

K4 View mode Display changes

Push	Display Explanation	Push	Display Explanation
0	Present Compressor Frequency	8	Discharge temperature
1	Target Compressor Frequency	9	OLP temperature
2	Order Compressor Frequency	10	Condenser temperature
3	EEV0 current step	11	Outdoor temperature
4	EEV1 current step	12	First current
5	EEV2 current step	13	Target Discharge temperature
6	EEV3 current step	14	Total capacity of the indoor units
7	Fan RPM (H:high,L:low,Blank:off)	15	Safety control

- The EEV 2 and EEV 3 of MH040FXEA2B/MH040FXEA2C/MH050FXEA2B/MH050FXEA2C/MH18VF1X/ MH19VF1X models are always displayed as blank.
- The EEV 3 of MH060FXEA3B model is always displayed as blank.

2. Apply the power to the outdoor unit.
   Outdoor unit will try to communicate the number of indoor units specified by SW01 on outdoor display PCB.

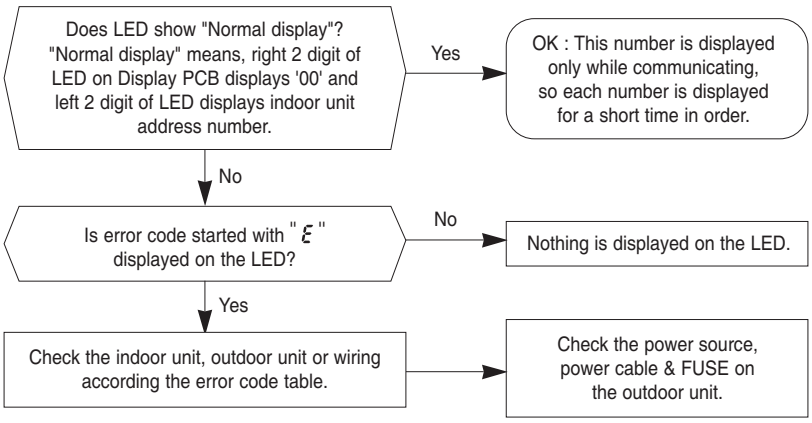

■ **Pipe Checking Operation (Auto Addressing Mode)**

Automated checking of pipe connection (Auto addressing option)

- Turn on the outdoor unit and wait for one minute.
  During these 60 seconds,the left dispaly DIS01 will show sequentially
  00-01-02-03-...15-00.
- E199 is showed on the display PCB of outdoor unit.
  -It means you didn ’t do “Pipe check operation“
- Push [K1] button on the display PCB of outdoor unit once, then begins to start “Pipe check operation”
  with displaying as below.

	Button [K1] 1 times	
Display	DIS 01 b5	DIS 02 ob
	[DIS 01] is flickering on the setting time.	
Time duration	Outdoor Temperature	
	0˚C or more	less than 0˚C
	(Cool mode) 5min~10min	(Heat mode) 20min~50min

✳ Expected time of 4 indoor units installation.

- [DIS02] shows the indoor unit under searching.
- It could take more time depending on the indoor and outdoor temperature.
- After completeing pipe check operation,it shows “ b5 ok ” on the display PCB.
- The left display DIS01 will show sequentially the following message:

  00 -Estabilished communication with indoor unit “A”;
  01 -Estabilished communication with indoor unit “B”;
  02 -Estabilished communication with indoor unit “C”;
  03 -Estabilished communication with indoor unit “D”;
  00 -Estabilished communication with indoor unit “A”...
- Function of **Step 3**

Mode	Function
Auto Addressing	Checking the connection & addressing
Manual Addressing	Checking the connection only

- If the auto addressing does not work according to the indoor unit capacity, model or installation condition,apply the manual addressing.

✳ When SW01 set "0"on Auto address mode,it means you install the maximum number of indoor unit.

1) Installation ID Unit Number=MAX Installation ID Unit Number of OD Unit.
   ➟ Don't need set SW01.
2) Installation ID Unit Number<MAX Installation ID Unit Number of OD Unit.
   ➟ Pls set SW01 as the number of which you install the indoor unit.

✳ On Manual address mode,you must set SW01 as the number of which you install the indoor unit.

- This mode is for finding the combination between indoor unit and each valve on the outdoor unit. Because refrigerant flow is controlled with EEV in the outdoor, controller should know which EEV will control which indoor unit.
- Once "PIPE CHECK MODE" is done normally, each indoor unit will remember the given address number by the outdoor unit and no need to do this checking. But in case of listed below, PIPE CHECK MODE should be done again.
  - Re-install the system (ie.house moving)
  - Remove indoor unit, Add new indoor unit, Change indoor PCB for repair.
  - Mode change from "manual addressing" to "auto addressing"
- On this mode the controller will ignore the manual address number set on the rotary switch on the indoor PCB.
- To confirm the indoor address number assigned by this mode, use "TEST MODE" and the address number will be displayed on the LED display on the indoor unit.

■ **In case of MANUAL ADDRESSING mode.**

Switch Setting and Testing Operation

To complete the installation, perform the following checks and tests to ensure that the air conditioner is operating correctly.

Step 1 Review all the following elements in the installation:

- Installation site strength
- Piping connection tightness to detect any gas leakage
- Connection wiring
- Heat-resistant insulation of the piping
- Drainage
- Earthing wire connection

Step 2 IMPORTANT!

Before selecting switch turn off the system power supply

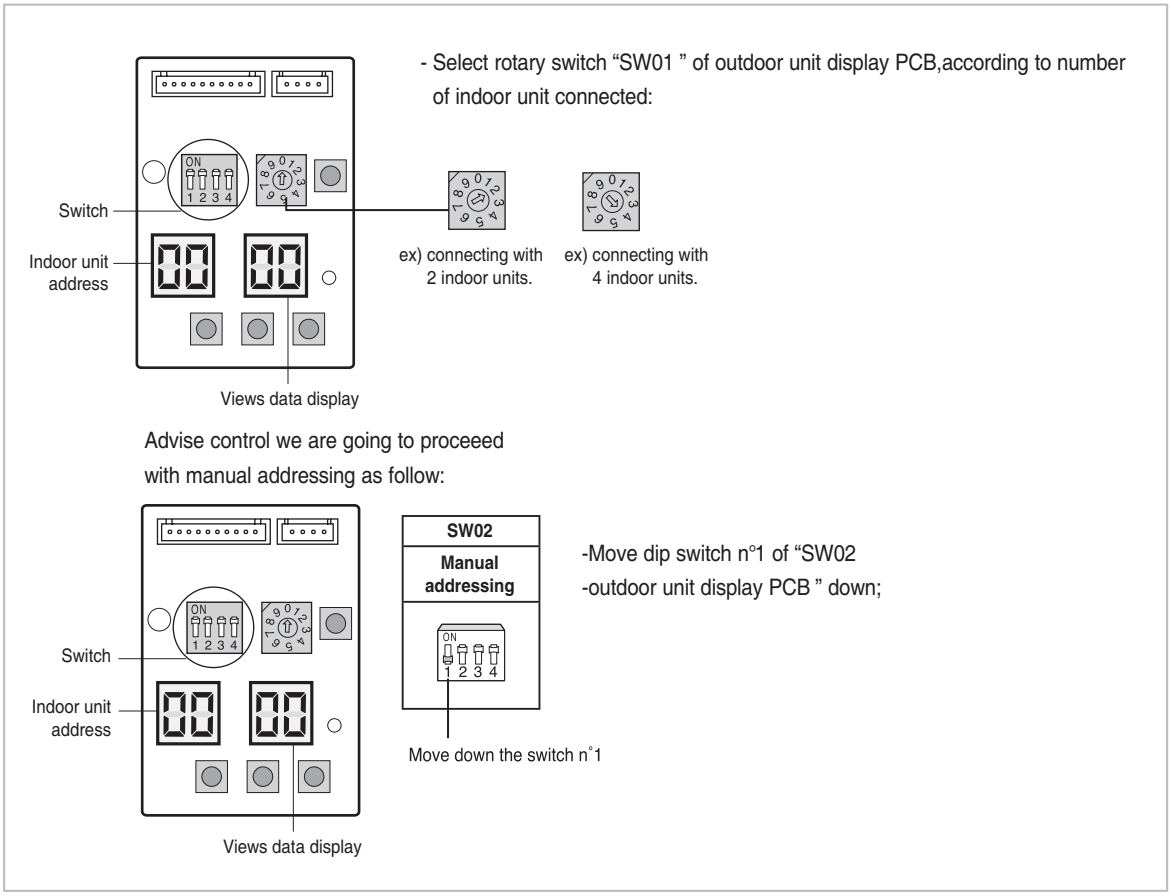

Step 3 Follow of indication reported into table below for indoor unit addressing.

Step 4 Turn on the system power supply and waiting for 60 seconds after estabilishing communication between outdoor and indoor units.

During this phase,the left display of outdoor unit display PCB “DIS01 ” will count fom 00--01--02 to 15.

Estabilished communication the left display will count sequentially:

00--communication with indoor unit A;

01--communication with indoor unit B;

02--communication with indoor unit C;

03--communication with indoor unit D;

✳ In case of Manual address mode,you can do pipe check operation for check whether you connect the pipes correctly or not. But you need set indoor address switch yourselves.

Switch Setting and Testing Operation (cont.)

TYPE	PICTURE	MODEL	TO SET ADDRESSING MANUALLY BY ROTARY SWITCH "SW02 "
RAC		MH020FVEA MH026FVEA MH035FVEA MH052FVEA MH020FNEA MH026FNEA MH035FNEA MH052FNEA MH023FBEA MH026FBEA MH035FBEA MH052FBEA MH020FAEA MH026FAEA MH035FAEA MH052FAEA	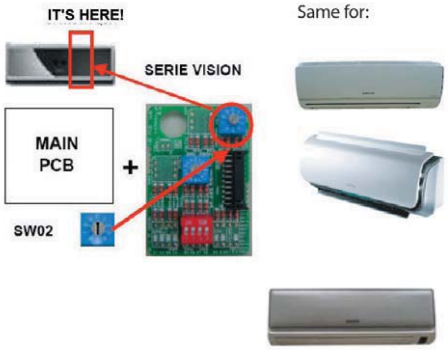
SLIM 1 WAY CASSETTE		MH026FSEA MH035FSEA	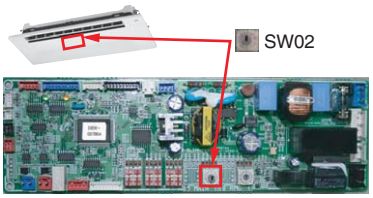
MINI 4 WAY CASSETTE		MH030FMEA MH035FMEA MH052FMEA	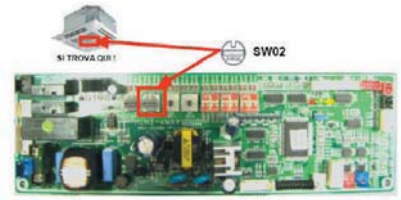
SLIM DUCT MSP-DUCT	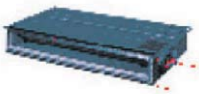	NJ026LHXEA NJ035LHXEA MH052FUEA	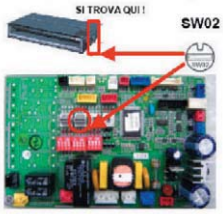
CONSOLE		MH026FJEA MH035FJEA MH052FJEA	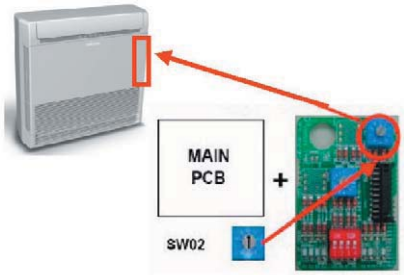

Switch Setting and Testing Operation (cont.)

ROTARY SWITCH "SW02 " POSITION ACCORDING TO REFRIGERANT CIRCUIT CONNECTED (0=A;1=B;2=C;3=D)

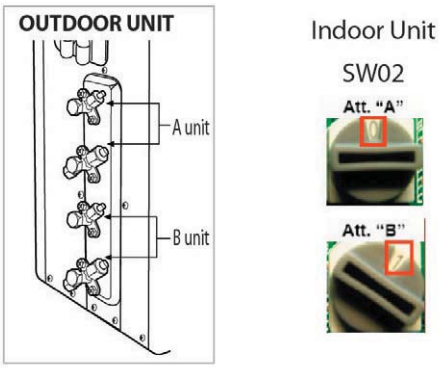

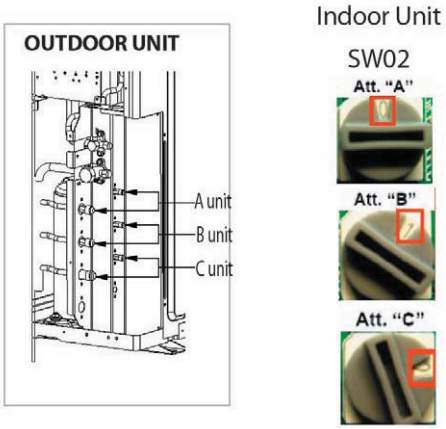

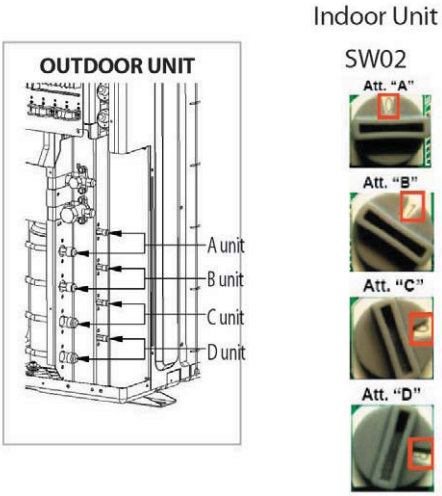

INSTALLATION TEST MODE (with all indoor units functioning)

Please do cool mode try-run or heat mode try run.

Cool mode try-run :Push the [K2] button three times.

Heat mode try-run :Push the [K2] button once.

After 12 minutes of stationary condition check each indoor unit air treatment:

Cooling mode (indoor unit check) → Inlet air temp.-Outlet air temp : From 10°K to 12°K (indicative delta T)

Heating mode (indoor unit check) → Outlet air temp.-Inlet air temp : From 11°K to 14°K (indicative delta T)

In heating mode,the indoor fan motor can remain off to avoid cold air blown into conditioned space.

● **If Error code is displayed on indoor or outdoor LED, check as follows;**

- Manaul address setting

Contents		
Q1	Turn on the system. But outdoor units PCB displayed E201 or E101 Error code.	
	Check point	Remarks
Step 1	Check to Number of indoor unit's SW01.	Outdoor PCB SW01
Step 2	Check to power cable to indoor units. Check to communication cable indoor units.	Wire connect

Contents		
Q2	Turn on the system. But outdoor units PCB displayed E203 Error code.	
	Check point	Remarks
Guidance	Outdoor communication error between the outdoor main PCB and sub PCB.	Outdoor PCB SW01
Step 1	Check to sub PCB wire and replace it.	Wire connect

Contents	
Q3	Turn on the indoor units. But indoor unit displayed E121/122/123/154 Error code.
Error code	Explanation
E121	Indoor unit room temperature sensor error (open/short)
E122	Indoor unit heat exchanger in temperature sensor error (open/short)
E123	Indoor unit heat exchanger out temperature sensor error (open/short)
E154	Indoor unite fan error
Guicance	Please, all units turn off and check to indoor unit's PCB and wire connection. E121/122/123 error detected, replace related sensor.

Contents	
Q4	Turn on the system. But indoor unit displayed E162/163 Error code.
Error code	Explanation
E162	Indoor unit EEPROM Error.
E163	Indoor unit EEPROM Option Error.
Guidance	Please, all units turn off and follow guidance. E163 : Please reset indoor Option code. If you don't know about that, replace indoor unit PCB which is related. E162 : Please replace indoor unit PCB which is related.

Contents	
Q5	Turn on the system. But outdoor unit displayed E221/237/251/320 Error code.
Error code	Explanation
E221	Outside temperature sensor error (open/short)
E237	Indoor unit heat exchanger in temperature sensor error (open/short)
E251	Condenser temperature sensor error (open/short)
E251	Compressor Discharge temperature sensor error (open/short)
E320	Compressor OLP sensor error (open/short)
Guidance	Please, The System turn off and replace sensor which is related.

Contents		
Q6	Indoor units address SW setting correct, but outdoor unit's PCB displayed E201 Error Code.	
	Check point	Remarks
Analysis	Indoor unit's sub PCB address SW or sub PCB is connected by mistake.	
Step 1	Check to indoor unit's sub PCB wire connecting condition.(misconnecting or Sub PCB is out of order)	Indoor Sub PCB
Step 2	Address setting mode change to auto address setting.	
Step 3	Following auto address setting steps.	
Guidance	Manual Address setting is Option in FJM PLUS A. But we solved problem like this situation, with auto address setting.	

- Auto address setting

Contents		
Q1	When the pipe checking operation is finished, outdoor sub PCB display E190 Error code.	
	Check point	Remarks
Analysis	Outdoor unit fails to search indoor units or to check indoor address.	The pipe checking operation
Step 1	Whether The gas and liquid pipes are crossed with each other, check to connecting.	Pipe connecting
Step 2	Check to outdoor unit's EEV coil being connected in proper location.	EEV Coil
Step 3	Check to indoor unit's sensor being connected in proper location.	Indoor sensor
Guidance	During the pipe checking operation , system check temperature change of indoor Heat exchanger.In case, indoor sensor defect, EEV coil connector detach, malfunction of EEV, Leakage of Refrigerant, and etc can make this case.	

- Address setting another case

Contents		
Q1	When the system installation is finished, outdoor unit's PCB display E202 Error code.	
	Check point	Remarks
Analysis	This problem is caused by outdoor unit's communication part trouble or indoor units power and communication line trouble.	The pipe checking operation
Step 1	Check to connect outdoor unit and indoor units cable.	Pipe connecting
Step 2	Replace outdoor unit's ass'y control or indoor unit's ass'y control.	EEV Coil
Guidance	Basically, This error caused by communication between Indoor Units and Outdoor Unit. First of all, check the all communication connection and PCB's status.	

- Operation Error

Contents		
Q1	While using cooling or heating, indoor units display E161 Error code	
	Check point	Remarks
Analysis	This problem is caused by user's fault. User's simultaneously operate 2 more indoor units in the same time cooling and heating mode.	
Guidance	FJM is operate by just cooling or heating mode only. (Only, HR system can operate cooling and heating mode simultaneously in the same time) Outdoor unit will be operate by first received signal, another operation signal is not applied system.	

Contents		
Q2	While using cooling or heating, System turn off and display E416 Error code.	
	Check point	Remarks
Analysis	E416 is outdoor unit high discharge temperature safety control Error code. After System restart automatically until 3 times, system stop and display this error. System can be operated by remote controller signal and K3(reset) key input.	
Step 1	Check outdoor units installation environment. (air flow blocking, the halation of another outdoor air flow)	
Step 2	Check refrigerant leakage.	
Step 3	Check outdoor EEV operation.	

Contents		
Q3	While using cooling or heating, System Turn off and display E458 Error code	
	Check point	Remarks
Analysis	E458 Error is related with outdoor unit fan Error. Especially, If system have a some problem in fan, in heating mode , it will be happened. And In auto address setting, without pipe checking operation must be happened it.	
Step 1	Check to outdoor fan operation.	
Step 2	If outdoor fan operation is clear, start to pipe checking operation.	
Guidance	When Auto address setting is finished without pipe checking operation, in heating mode, outdoor unit refrigerant distribution control is malfunction. It make our system to confuse it's condition. But, basically this error code is concerned about fan error.	

Contents		
Q4	While using cooling mode, outdoor unit turn off and display E401 Error code.	
	Check point	Remarks
Analysis	This is caused by protection mode behavior. This is indoor Evaporator Freezing protection mode.	
Step 1	Please, check indoor unit, whether inlet or outlet grill is closed.	
Step 2	Please, check indoor unit, whether indoor fan is working.	

Contents		
Q5	When system start in cooling mode, System don't operate and display E441 Error code	
	Check point	Remarks
Analysis	FJM PLUS is able to operate by -10˚C But we admit that minimum Cooling temperature is by -5˚C Please, Remember cooling operation range.	

Contents		
Q6	While using heating, outdoor unit turn off and display E404 Error code.	
	Check point	Remarks
Analysis	Heating overload safety mode make this situation. After System restart automatically until 3 times, System display this error code and stop. System can operate by remote controller input signal or K3(reset) key input.	
Step 1	Check indoor units air flow.	
Step 2	Check outdoor unit air flow and installation (outdoor air flow blocking & over charging)	

Contents		
Q7	When system start in Heating mode, System don't operate and display E440 Error code.	
	Check point	Remarks
Analysis	FJM PLUS is able to operate up to 30˚C But we admit that Maximum Heating temperature is up to 24˚C Please, Remember Heating operation range.	

- Try-run Check Error

Contents		
Q1	While the system is working try-run mode, system turn off and display E128 / 129 / 246 / 261 / 419 / 422 / 554 Error code.	
	Check point	Remarks
Analysis	These Error codes only apply with Try-run mode, in case of system have some defect as result of try-run operation. ✳ Refer to self-detection algorithm (Check Error Code meaning and check it out)	

4-5 Fault Diagnosis by Symptom

4-5-1 Basic Check Flow

Preparation : multimeter (AC voltage, DC voltage, Resistance)

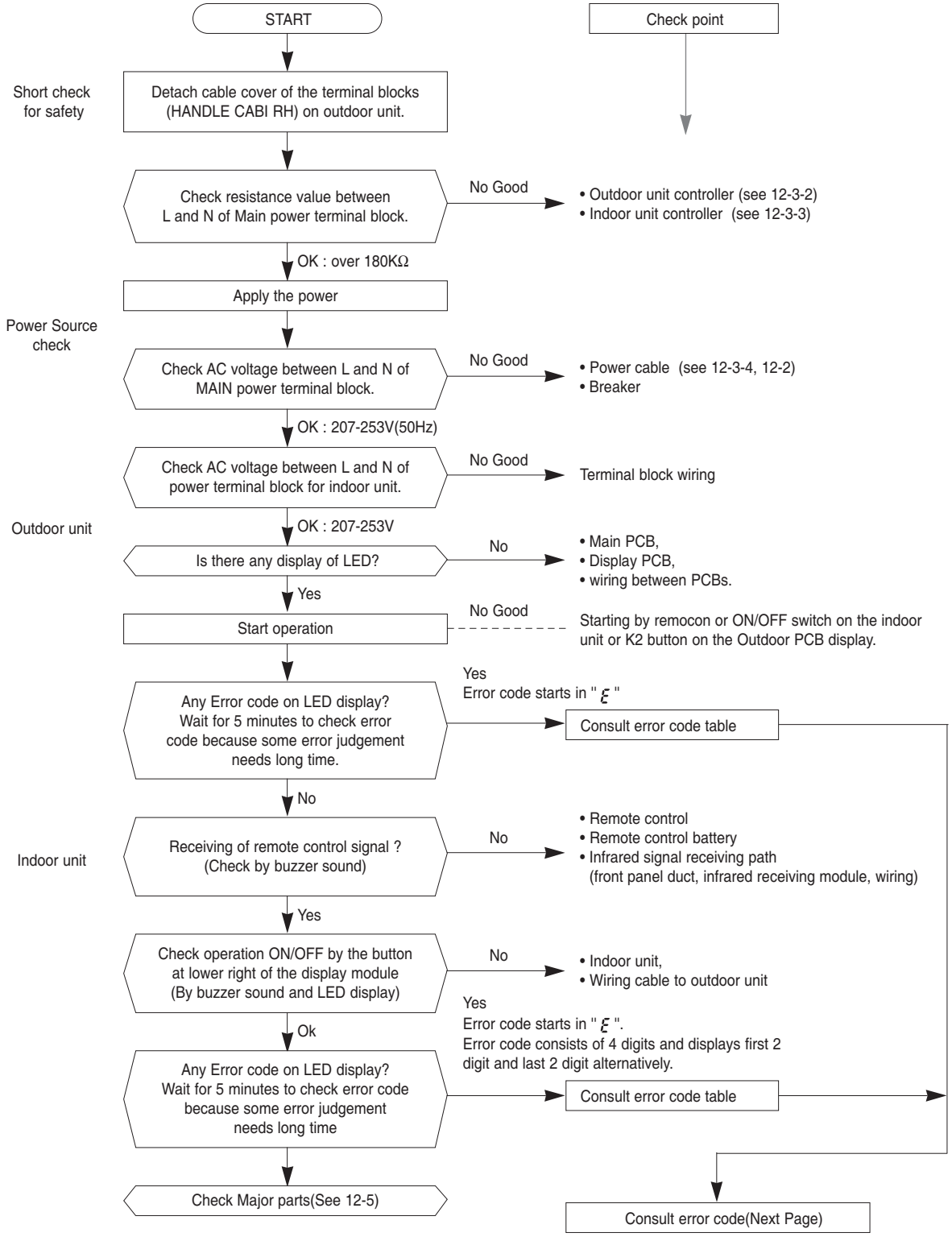

Basic Check Flow(cont.)

Preparation : multimeter (AC voltage, DC voltage, Resistance)

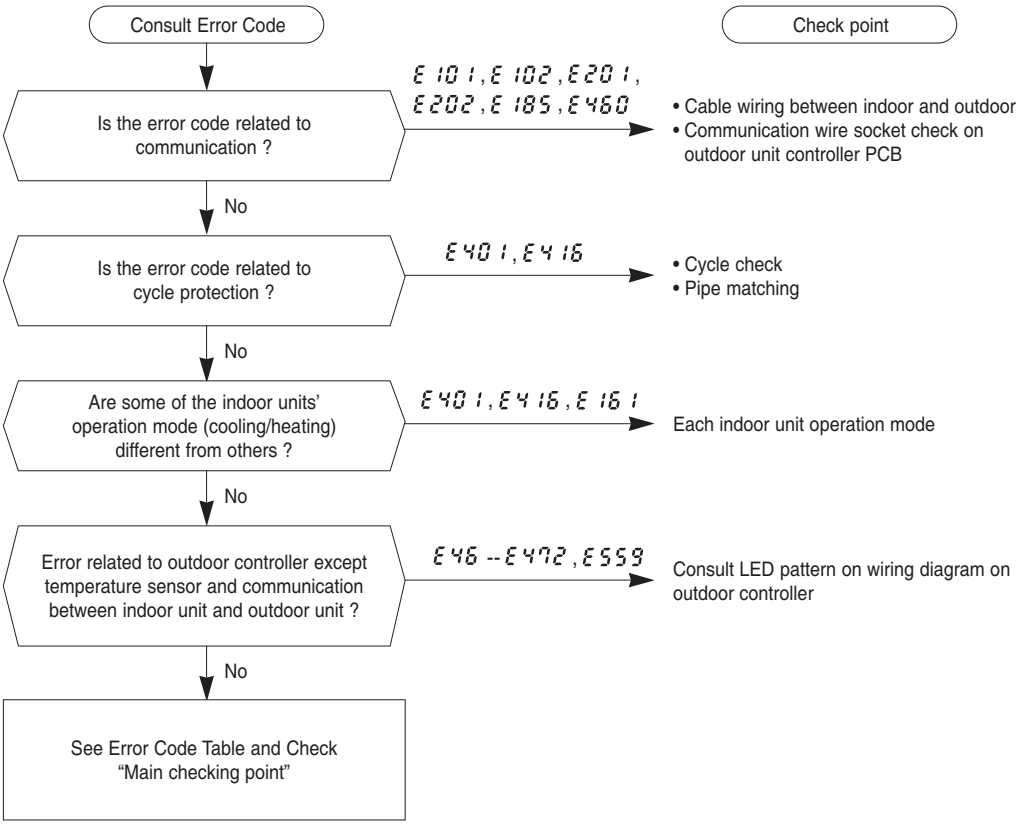

4-5-2 Checking Outdoor Controller

1. Making sure the wire connections.

   Caution!
   When you remove PBA, you have to check DC link Voltage.
   After Power off, DC link Voltage is so high!

2. Checking AC line

3. Checking ON/OFF pattern of LED

■ INV LED(Green) : If Inv micom communicate with mian micom, INV LED is blinking

4. Checking DC voltage on each point

RJ040F2HXEA/RJ050F2HXEA

Item	Measuring point	Normal value
DC LINK	CE101 voltage	AC220V -> 305~310Vdc
Main control 15V	CE154 voltage	14.5V - 15.5V
Main control 12V	CE157 voltage	12V - 15V
Main control 5V	CE158 voltage	4.75V - 5.25V
Main control 3.3V	CE155 voltage	3.0V - 3.6V

RJ060F3HXEA/RJ070F4HXEA/RJ080F4HXEA

Item	Measuring point	Normal value
DC LINK	CE001 voltage	AC220V -> 305~310Vdc
Main control 15V	CE110 voltage	14.5V - 15.5V
Main control 12V	CE108 voltage	12V - 15V
Main control 5V	CE106 voltage	4.75V - 5.25V
Main control 3.3V	CE105 voltage	3.0V - 3.6V

5. Checking PFCM

   Check Resistance between R and S

RJ040F2HXEA/RJ050F2HXEA

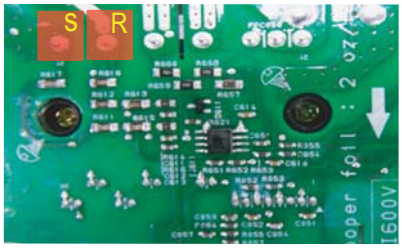

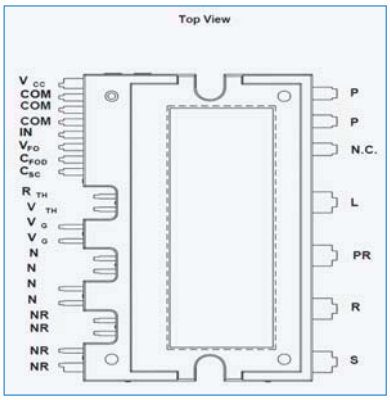

RJ060F3HXEA/RJ070F4HXEA/RJ080F4HXEA

	Measuring point	Normal value
Resistance	R - S	over the hundreds kΩ

4-5-3 Outdoor unit fan error - RJ040F2HXEA/RJ050F2HXEA/RJ060F3HXEA/RJ070F4HXEA/RJ080F4HXEA

1. Check Items:
   1) Are the input voltage and power connection correct?
   2) Is the motor connecting wire connected to the outdoor unit PCB correctly?
   3) Are the indoor/outdoor fuses connected?
   4) Are there any obstacles near the motor or propeller?
   5) Is the motor driver out of order?

2. Check procedure

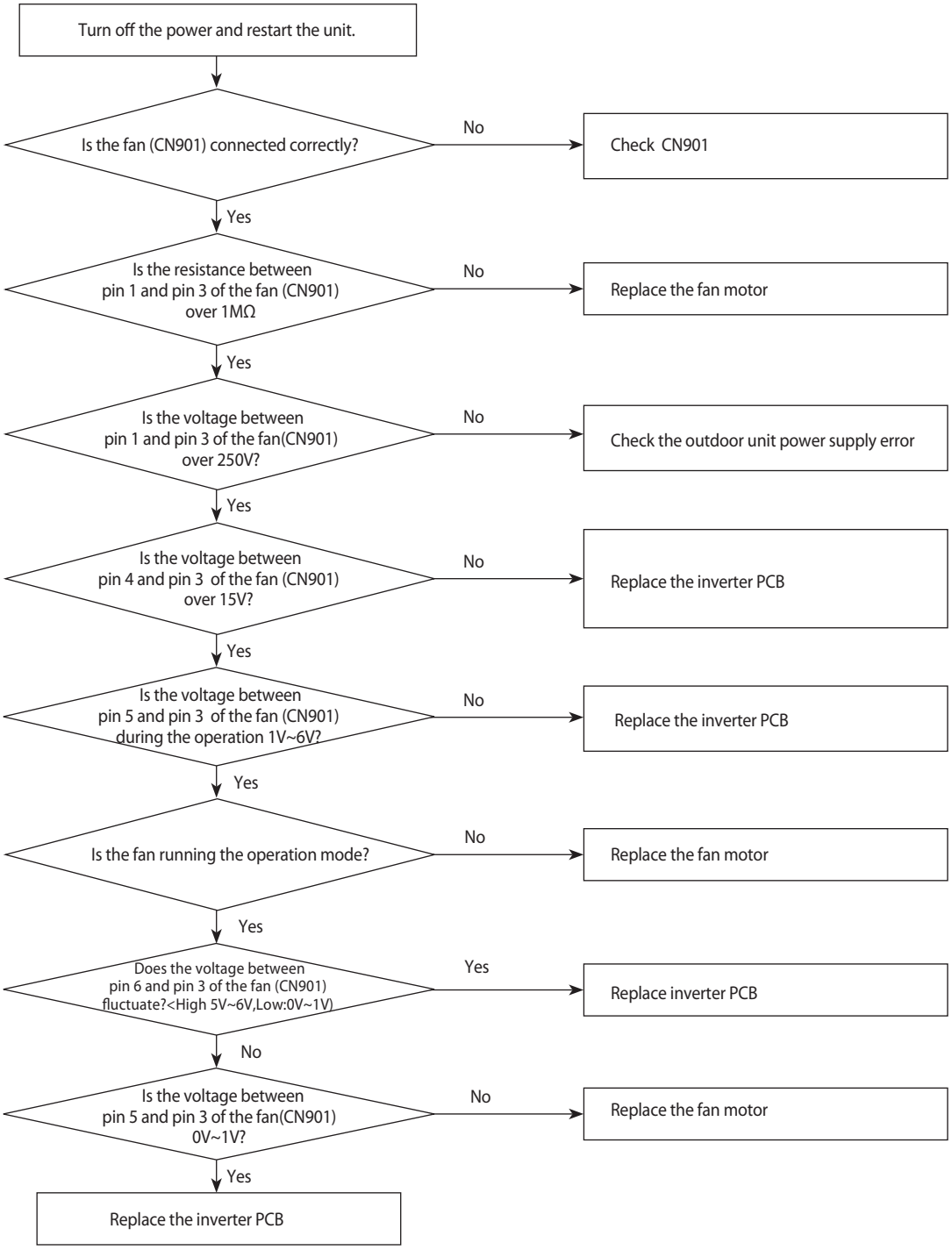

4-5-4 Compressor startup error, Compressor Lock error, Compressor rotation error.

1. Check Items:
   1) Are the power supply and compressor connecting wires connected correctly?
   2) Is the inter-phase resistance of the compressor normal?
2. Check procedure

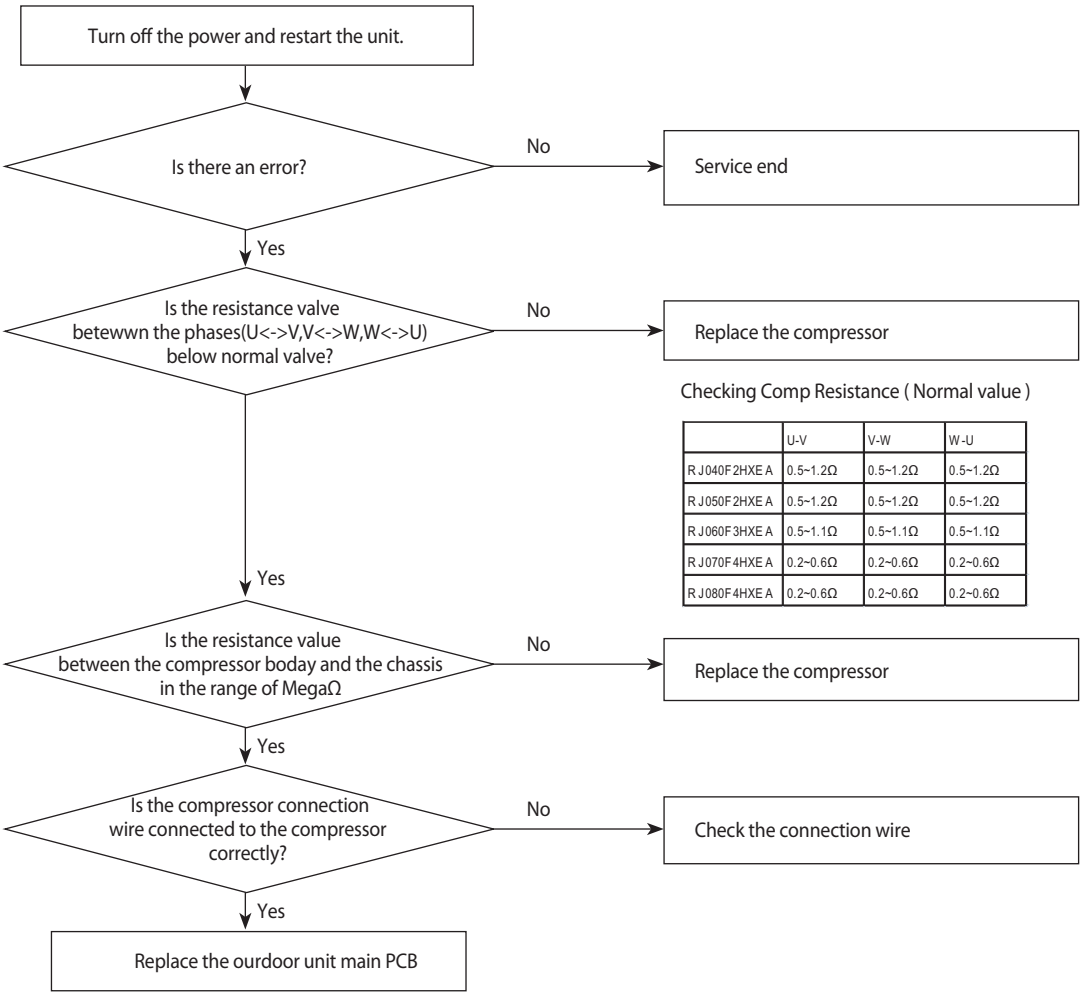

Checking Comp Resistance (Normal value)

	U-V	V-W	W-U
RJ040F2HXEA	0.5~1.2Ω	0.5~1.2Ω	0.5~1.2Ω
RJ050F2HXEA	0.5~1.2Ω	0.5~1.2Ω	0.5~1.2Ω
RJ060F3HXEA	0.5~1.1Ω	0.5~1.1Ω	0.5~1.1Ω
RJ070F4HXEA	0.2~0.6Ω	0.2~0.6Ω	0.2~0.6Ω
RJ080F4HXEA	0.2~0.6Ω	0.2~0.6Ω	0.2~0.6Ω

4-5-5 IPM Over Current error- RJ040F2HXEA/RJ050F2HXEA/RJ060F3HXEA/RJ070F4HXEA/RJ080F4HXEA

1. Check Items:
   1) Is the coolant changed?
   2) Is the compressor running normally?
   3) Is the compressor connected correctly?
   4) Are there any obstacles near the indoor and outdoor units?

2. Check procedure

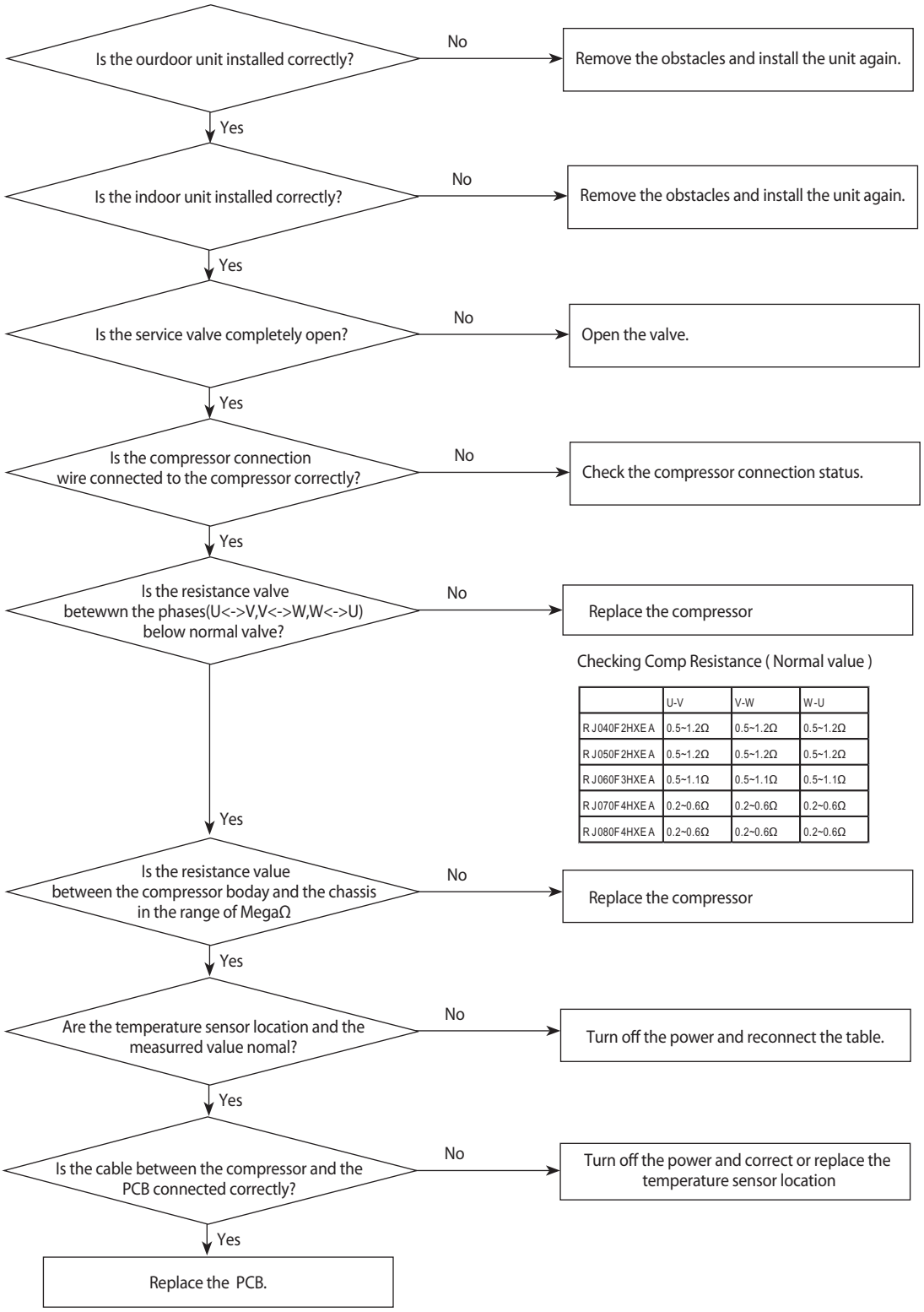

Checking Comp Resistance (Normal value)

	U-V	V-W	W-U
RJ040F2HXEA	0.5~1.2Ω	0.5~1.2Ω	0.5~1.2Ω
RJ050F2HXEA	0.5~1.2Ω	0.5~1.2Ω	0.5~1.2Ω
RJ060F3HXEA	0.5~1.1Ω	0.5~1.1Ω	0.5~1.1Ω
RJ070F4HXEA	0.2~0.6Ω	0.2~0.6Ω	0.2~0.6Ω
RJ080F4HXEA	0.2~0.6Ω	0.2~0.6Ω	0.2~0.6Ω

4-5-6 Checking Temperature sensor

See 12-5 "Fault Diagnosis of Major Parts".
In case of a sensor in outdoor unit, temperature can be monitored with "VIEW MODE".
Press K4 key on the outdoor display PCB for several time to change the display to sensor temperature value.
Left 1 digit of the LED is data index and Right 2 digits are the value.

Index	Value	Remark
8	Discharge sensor temperature	The unit is degree C
9	OLP sensor temperature	
A	Condenser sensor temperature	
B	Outdoor sensor temperature	

4-5-7 Checking EEV

See 12-5 "Fault Diagnosis of Major Parts".
Current EEV step value can monitored with "VIEW MODE"
Press K4 key on the outdoor display PCB for several time to change the display to current EEV value.
Left 1 digit of the LED is data index and Right 3 digits is the value.

Index	Value		Remark
3	EEV-A step		The step value range is between Zero and 480.
4	EEV-B step		
5	EEV-C step	RJ040/050F2HXEA	
6	EEV-D step	RJ060F3HXEA /RJ70/080F4HXEA	

4-6 PCB Inspection

4-6-1 Cautions for Part Replacement

1. The human body carries much static electricity. Before touching a part for repair, replacement or the similar purpose, be sure to touch a grounded metallic portion by hand to let the static electricity go through the metallic portion to the earth.
   Especially when handling any micro computer or IC, carefully remove such static electricity before touching them.
2. When repairing any part on a work bench, be sure to place an insulative sheet on the bench and always keep the sheet surface neat without any metal fragments. If any such fragment touches a part, a secondary trouble will possibly be caused in the part.
3. Before replacing any parts, be sure to turn off the power supply. If such replacement is done with the power supply kept on, an electric shock, short circuit or destruction of a part may result.
4. During replacement or repair of a part, carefully handle it : The printed circuit board has fine lead wires (jumper wires) and glass-made parts (diode) on its substrate.
   So if a circuit board is roughly handled, such lead wires and parts will be easily broken or damaged by bending or shock.
5. When soldering the lead wires of any new part, be sure to polish them using an emery paper or the like before soldering them.
   Since the lead wires of any new part are covered with an oxide film, solder cannot adhere to the lead wires if not polished.
6. When soldering any part, care should be exercised not to apply any high-wattage soldering iron to the part for a long time. Some parts are of so low a heat resistance that they may be broken or have the properties changed if a soldering iron is so applied (Otherwise, the pattern may possibly be separated and raised).
7. The heat of the soldering iron should be transferred to the entire object to be soldered. If the solder pieces are not well fused due to insufficient transfer of the heat from the soldering iron, no satisfactory electrical continuity can be assured even if the soldered objects appear well connected to each other.
8. The solder used should be limited to a minimum. If excessive solder is used, it will cause inter-pattern contact, which may cause malfunction of the circuit.
9. Although some part of the PCB surface are coated with coating material for protection from dust and dirt, soldering is also available to the coating part. Because this coating is thin and is weak for soldering heat.
   But coating material remaining on the solder part should be cleaned up before soldering a new component to prevent the solder part from becoming bad conduction.

4-6-2 Procedure

The parts should be replaced in the following procedure.

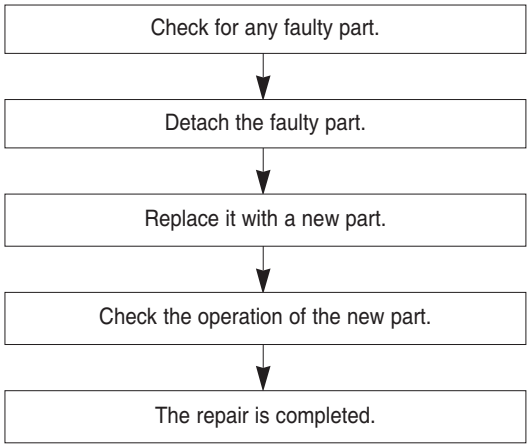

MEMO

5. Exploded Views and Parts List

5-1 Indoor Unit

5-1-1 MH020FNEA/MH026FNEA/MH035FNEA

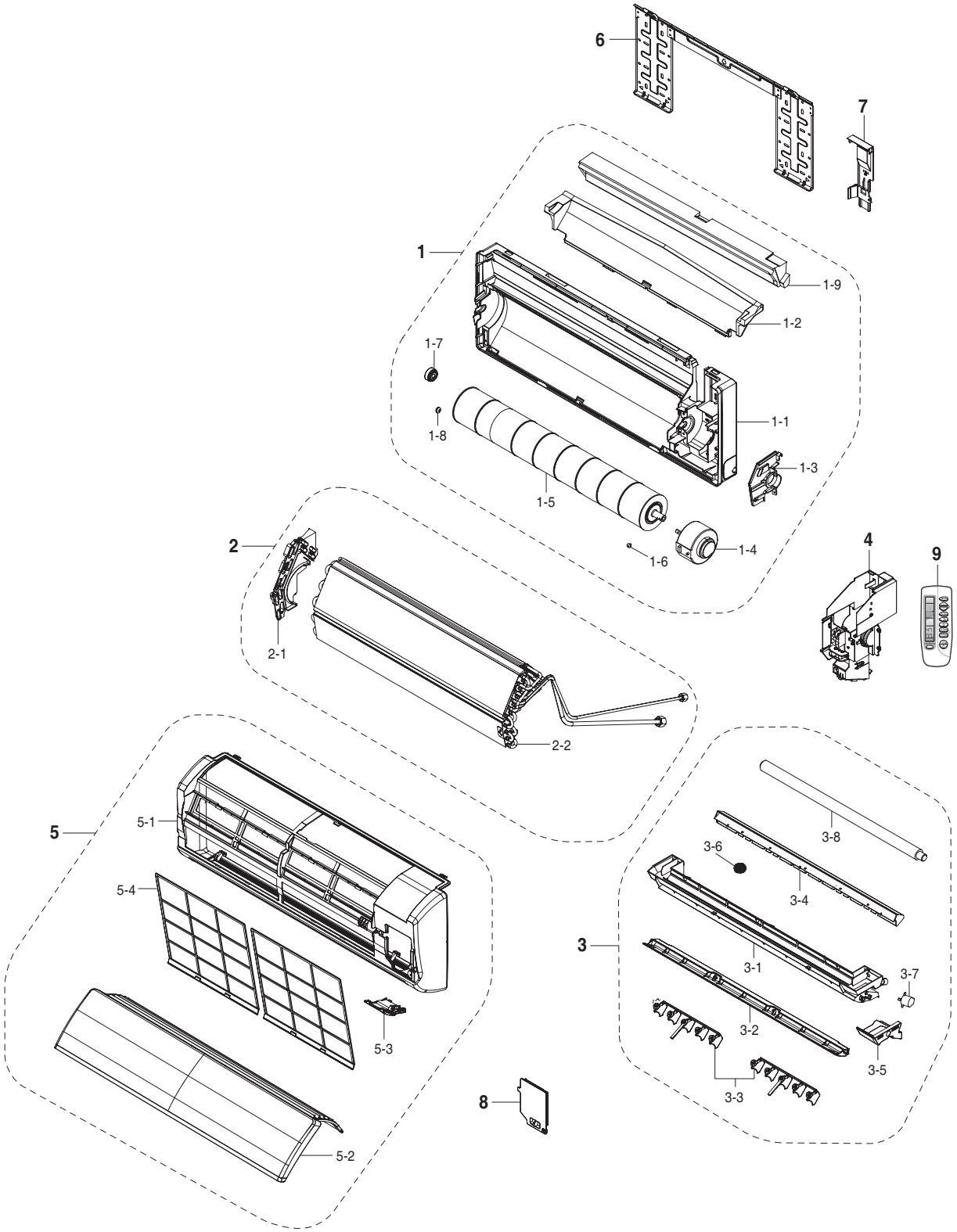

■ **Parts List**

No.	Code No.	Description	Specification	Q'TY		SA/SNA	Remark
				MH020FNEA	MH026FNEA MH035FNEA		
1	DB94-00454H	ASS'Y BACK BODY	ASS'Y	1	1	**SA**	
1-1	DB61-01632D	BACK BODY	HIPS	1	1	SNA	
1-2	DB69-00834A	CUSHION BACK BODY	EPS	1	1	SNA	
1-3	DB96-03149A	ASS'Y SUPPORT EVAP RH	HIPS	1	1	**SA**	
1-4	DB31-00219A	MOTOR IN	220-240V~,50/60Hz,Class E	1	1	**SA**	
1-5	DB94-00456A	ASS'Y CROSS FAN	OD92xL635	1	1	**SA**	
1-6	DB97-02075A	ASS'Y BOLT SPECIAL	ASS'Y	1	1	SNA	
1-7	DB94-00455A	ASS'Y RUBBER BEARING	ASS'Y	1	1	SNA	
1-8	DB94-40007A	ASS'Y BEARING	BEARING	1	1	**SA**	
1-9	DB69-00833A	CUSHION EVAP UP	EPS	1	-	**SA**	
2	DB96-07613A	ASS'Y EVAP TOTAL	ASS'Y	1	1	**SA**	
2-1	DB63-00850A	COVER BEARING	ABS	1	1	SNA	
2-2	DB96-03060G	ASS'Y EVAP	ASS'Y	1	1	SNA	
3	DB94-00457J	ASS'Y TRAY DRAIN	ASS'Y	1	1	**SA**	
3-1	DB63-00848A	TRAY DRAIN	ABS	1	1	SNA	
3-2	DB61-01635C	BLADE-H	HIPS	1	1	**SA**	
3-3	DB61-01636A	BLADE-V	PP	1	1	**SA**	
3-4	DB63-00849A	TRAY STABILIZER	ABS	1	1	SNA	
3-5	DB69-00839A	CUSHION EPS TRAY RH	EPS	3	3	**SA**	
3-6	DB73-00180A	RUBBER CAP DRAIN	GUM-EPM	3	3	SNA	
3-7	DB31-00371A	ASS'Y MOTOR STEPPING	220-240V~,50/60Hz,Class E	1	1	**SA**	
3-8	DB94-00458B	ASS'Y DRAIN HOSE	ASS'Y	1	1	**SA**	
4	DB93-06025A	ASS'Y CONTROL IN	ASS'Y	1	1	**SA**	
5	DB92-01237A	ASS'Y PANEL FRONT	ASS'Y	1	1	**SA**	
5-1	DB64-00989E	PANEL FRONT	HIPS	1	1	**SA**	
5-2	DB92-01207A	ASS'Y GRILLE AIR INLET	ASS'Y	1	1	**SA**	
5-3	DB90-03094A	ASS'Y COVER DISPLAY	ASS'Y	1	1	**SA**	
5-4	DB63-01591A	GUARD AIR FILTER	PP	1	1	SNA	
6	DB97-02851C	ASS'YPLATE HANGER	ASS'Y	1	1	SNA	
7	DB61-01638B	HOLDER PIPE	PS	1	1	SNA	
8	DB90-03965A	ASS'Y COVER TERMINAL	ASS'Y	1	1	**SA**	
9	DB93-03170Z	ASS'Y REMOCON	ARH-463	1	1	**SA**	

5-1-2 MH052FNEA

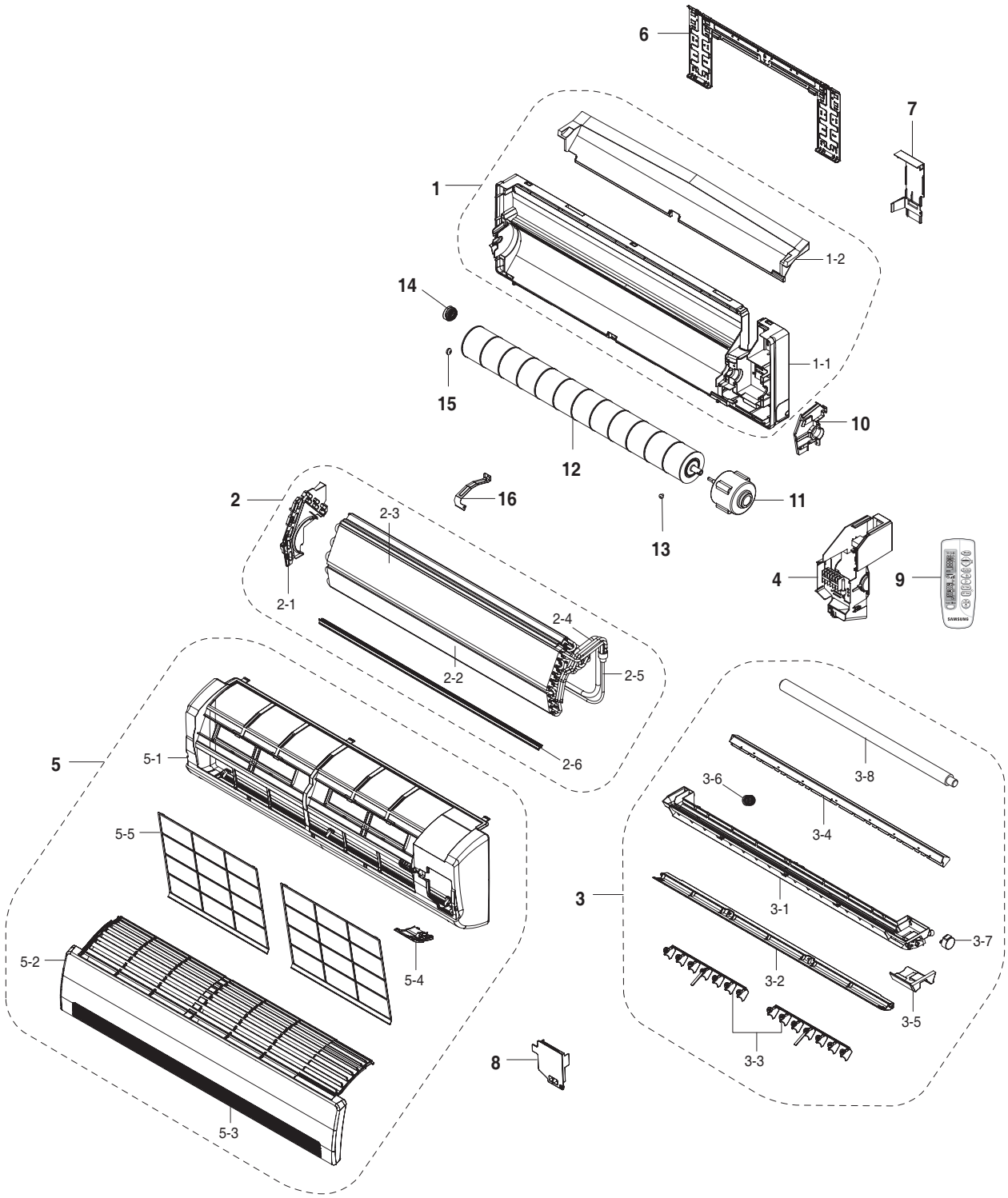

■ **Parts List**

No.	Code No.	Description	Specification	Q'TY	SA/SNA
1	DB94-00615B	ASS'Y BACK BODY	ASS'Y	1	**SA**
1-1	DB61-01974B	BACK BODY	HIPS	1	SNA
1-2	DB69-01039A	CUSHION BACK BODY	EPS	1	SNA
2	DB96-06587D	ASS'Y EVAP TOTAL	ASS'Y	1	**SA**
2-1	DB63-01065A	COVER BEARING	ABS	1	SNA
2-2	DB96-07606A	ASS'Y EVAP MAIN	ASS'Y	1	SNA
2-3	DB96-06525B	ASS'Y EVAP SUB	ASS'Y	1	SNA
2-4	DB96-07590A	ASS'Y TUBE EVAP OUT	ASS'Y	1	**SA**
2-5	DB96-07589A	ASS'Y TUBE EVAP IN	ASS'Y	1	**SA**
2-6	DB60-00192A	SPACER EVAP LOW	PVC	1	SNA
3	DB94-00616E	ASS'Y TRAY DRAIN	ASS'Y	1	**SA**
3-1	DB63-01071A	TRAY DRAIN	ABS	1	SNA
3-2	DB61-01975C	BLADE-H	HIPS	1	**SA**
3-3	DB61-01976A	BLADE-V	PP	2	**SA**
3-4	DB63-01066A	TRAY STABILIZER	ABS	1	SNA
3-5	DB69-01024A	CUSHION EPS TRAY RH	EPS	1	**SA**
3-6	DB73-00180A	RUBBER CAP DRAIN	GUM-EPM	1	SNA
3-7	DB31-00285A	ASS'Y MOTOR STEPPING	220-240V~,50/60Hz,Class E	1	**SA**
3-8	DB94-00458B	ASS'Y DRAIN HOSE	ASS'Y	1	**SA**
4	DB93-06038A	ASS'Y CONTROL IN	ASS'Y	1	**SA**
5	DB92-01235A	ASS'Y PANEL FRONT	ASS'Y	1	**SA**
5-1	DB64-01184C	PANEL FRONT	HIPS	1	**SA**
5-2	DB64-02045A	GRILLE AIR INLET	HIPS	1	**SA**
5-3	DB64-02046A	DECORATION GRILLE	PC(GRAY)	1	**SA**
5-4	DB93-02867C	ASS'Y COVER DISPLAY	ASS'Y	1	**SA**
5-5	DB63-01592B	GUARD AIR FILTER	PP	2	SNA
6	DB90-02738A	ASS'Y PLATE HANGER	ASS'Y	1	SNA
7	DB61-01981B	HOLDER PIPE	PS	1	SNA
8	DB90-03966A	ASS'Y COVER TERMINAL	ASS'Y	1	**SA**
9	DB93-03170Z	ASS'Y REMOCON	ARH-463	1	**SA**
10	DB96-03817A	ASS'Y SUPPORT EVAP RH	HIPS	1	**SA**
11	DB31-00267A	MOTOR IN	220-240V~,50/60Hz,Class E	1	**SA**
12	DB94-00456B	ASS'Y CROSS FAN	OD92	1	**SA**
13	DB97-02075A	ASS'Y BOLT SPECIAL	ASS'Y	1	SNA
14	DB94-00455A	ASS'Y RUBBER BEARING	ASS'Y	1	SNA
15	DB94-40007A	ASS'Y BEARING MOTOR	BEARING	1	**SA**
16	DB61-01977A	BRACKET EVAP	SGCC-M	1	**SA**

5-1-3 MH023FBEA/MH026FBEA/MH035FBEA

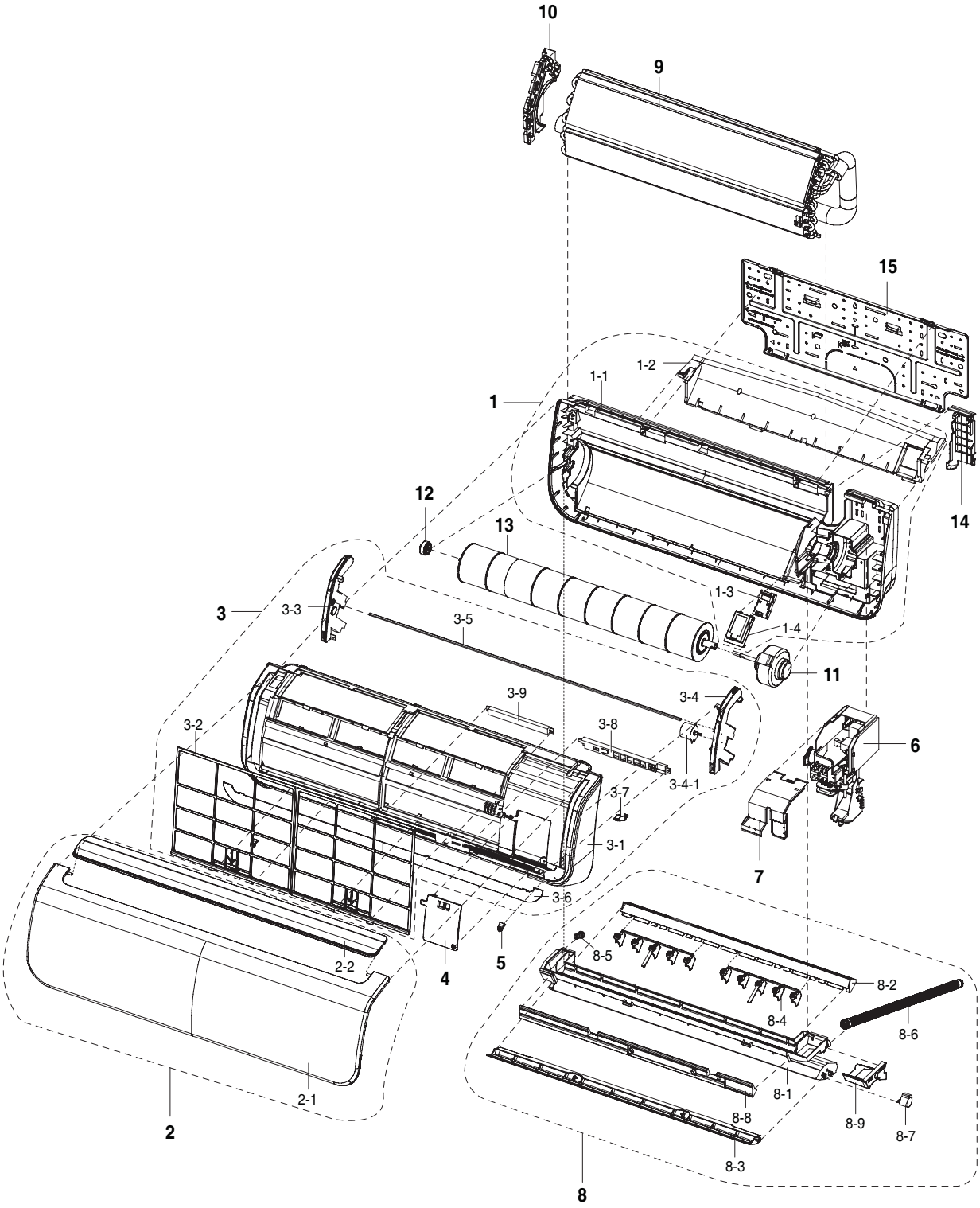

■ **Parts List**

No.	Code No.	Description	Specification	Q'TY MH023FBEA MH026FBEA MH035FBEA	SA/SNA
1	DB94-01555A	ASS'Y-BODY BACK	ASS'Y	1	**SA**
1-1	DB61-03295A	BODY BACK	HIPS	1	SNA
1-2	DB62-05141A	SEAL-INSUL BODY REAR	EPS(30)	1	SNA
1-3	DB63-01812A	COVER-MPI	HIPS	1	**SA**
1-4	DB93-04230A	ASS'Y-COMPACT MPI	ASS'Y	1	**SA**
2	DB92-01124C	ASS'Y GRILLE	ASS'Y	1	**SA**
2-1	DB64-01872A	GRILLE-AIR INLET	ABS	1	**SA**
2-2	DB64-01867A	GRILLE-DOOR	ABS	1	**SA**
3	DB92-01125A	ASS'Y PANEL FRONT	ASS'Y	1	**SA**
3-1	DB64-01866A	PANEL FRONT	HIPS	1	SNA
3-2	DB63-01826A	FILTER-PRE	PP	2	**SA**
3-3	DB92-01122A	ASS'Y-RACK GRILLE LF	ASS'Y	1	**SA**
3-4	DB92-01123A	ASS'Y-RACK GRILLE RH	ASS'Y	1	**SA**
3-4-1	DB31-00368B	MOTOR STEP	DC12V,3500gf.cm	1	SNA
3-5	DB66-01256A	SHAFT-PINION	STS304	1	SNA
3-6	DB64-01873A	WINDOW-DISPLAY	PMMA	1	SNA
3-7	DB64-01876A	BUTTON-POWER	PMMA	1	SNA
3-8	DB93-05779A	ASS'Y DISPLAY	ASS'Y	1	SNA
3-9	DB93-05778A	ASS'Y DISPLAY-MPI	ASS'Y	1	SNA
4	DB90-03967A	ASS'Y COVER TERMINAL	ASS'Y	1	**SA**
5	DB67-00849A	CAP-SCREW	HIPS	2	**SA**
6	DB93-05899A	ASS'Y CONTROL IN	ASS'Y	1	**SA**
7	DB63-01850A	COVER-PBA	SGCC-M	1	**SA**
8	DB94-01557A	ASS'Y TRAY DRAIN	ASS'Y	1	**SA**
8-1	DB63-01849A	TRAY DRAIN	ABS	1	SNA
8-2	DB63-01837A	TRAY-STABILIZER	ABS	1	**SA**
8-3	DB61-03332A	BLADE-H	ABS	1	**SA**
8-4	DB61-01636A	BLADE-V	PP	2	**SA**
8-5	DB73-00180A	RUBBER-CAP DRAIN	GUM-EPM	1	SNA
8-6	DB94-00458B	ASS'Y DRAIN-HOSE	ASS'Y	1	**SA**
8-7	DB31-00371A	MOTOR STEP	DC12V, 600gf.cm	1	**SA**
8-8	DB62-05155A	SEAL-INSUL TRAY FR	EPS(30)	1	SNA
8-9	DB69-00839A	CUSHION-TRAY RH	EPS(30)	1	SNA
9	DB96-09626A	ASS'Y EVAP-TOTAL	ASS'Y	1	**SA**
10	DB61-03333A	HOLDER-EVAP	HIPS	1	**SA**
11	DB31-00474A	MOTOR FAN	0.3A,50/60Hz,35W,220/240V,1350rpm	1	**SA**
12	DB94-00455A	ASS'Y BEARING-RUBBER	ASS'Y	1	**SA**
13	DB94-01556A	ASS'Y-CROSS FAN	ASS'Y	1	**SA**
14	DB61-03296A	HOLDER-PIPE	HIPS	1	**SA**
15	DB70-00819A	PLATE-HANGER	SGCC-M	1	**SA**

5-1-4 MH052FBEA

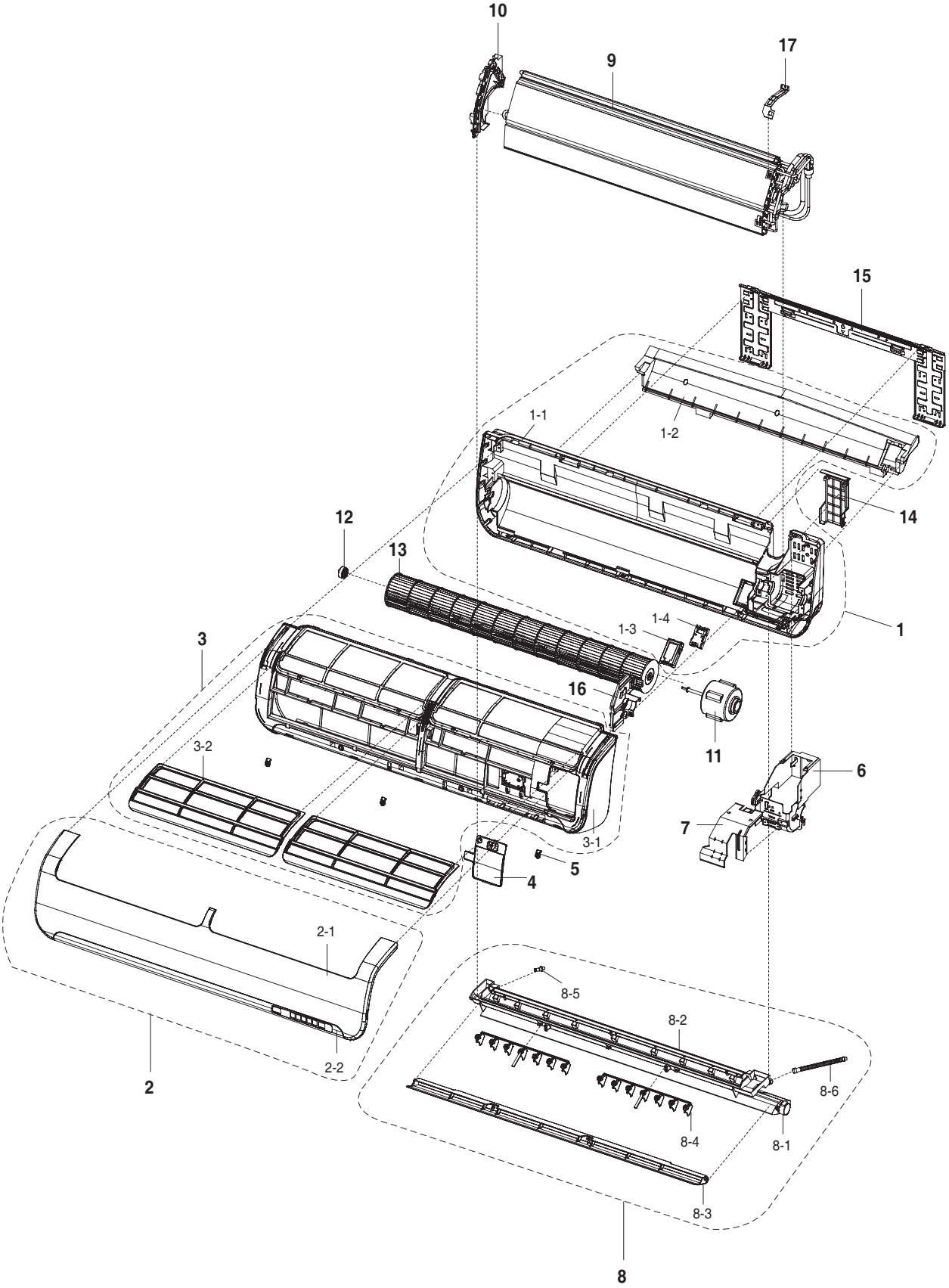

■ **Parts List**

No.	Code No.	Description	Specification	Q'TY	SA/SNA
1	DB94-01547A	ASS'Y-BODY BACK	ASS'Y	1	**SA**
1-1	DB61-03344A	BODY BACK	HIPS	1	SNA
1-2	DB62-05163A	SEAL-INSUL BODY REAR	EPS(30)	1	SNA
1-3	DB63-01851A	COVER-MPI	HIPS	1	**SA**
1-4	DB93-04230A	ASS'Y-COMPACT MPI	ASS'Y	1	**SA**
2	DB92-01120B	ASS'Y GRILLE	ASS'Y	1	**SA**
2-1	DB64-01880B	GRILLE-AIR INLET	ABS	2	SNA
2-2	DB63-01860B	COVER-DISPLAY	ABS	1	SNA
3	DB92-01119A	ASS'Y PANEL FRONT	ASS'Y	1	**SA**
3-1	DB64-01882A	PANEL FRONT	HIPS	1	**SA**
3-2	DB94-01614B	ASS'Y-GUARD AIR FILTER	ASS'Y	1	**SA**
4	DB90-03968A	ASS'Y COVER TERMINAL	ASS'Y	1	**SA**
5	DB67-00855B	CAP-SCREW	HIPS	3	**SA**
6	DB93-05894A	ASS'Y CONTROL IN	ASS'Y	1	**SA**
7	DB63-01859A	COVER-PBA	SGCC-M	1	**SA**
8	DB94-01549B	ASS'Y TRAY DRAIN	ASS'Y	1	**SA**
8-1	DB63-01853A	TRAY DRAIN	ABS	1	SNA
8-2	DB63-01861A	TRAY-STABILIZER	ABS	1	**SA**
8-3	DB61-03341B	BLADE-H	ABS	1	**SA**
8-4	DB61-01976B	BLADE-V	PP	2	**SA**
8-5	DB73-00180A	RUBBER-CAP DRAIN	GUM-EPM	1	SNA
8-6	DB94-00458B	ASS'Y DRAIN-HOSE	ASS'Y	1	**SA**
9	DB96-09670A	ASS'Y EVAP-TOTAL	ASS'Y	1	**SA**
10	DB61-03346A	HOLDER-EVAP	HIPS	1	**SA**
11	DB31-00479A	MOTOR FAN	0.3A,50/60Hz,220/240V	1	**SA**
12	DB94-00455A	ASS'Y BEARING-RUBBER	ASS'Y	1	**SA**
13	DB94-01550A	ASS'Y-CROSS FAN	ASS'Y	1	**SA**
14	DB61-03335A	HOLDER-PIPE	HIPS	1	**SA**
15	DB90-03483A	ASS'Y PLATE-HANGER	ASS'Y	1	**SA**
16	DB61-03334A	SUPPORT-EVAP	HIPS	1	**SA**
17	DB61-03361A	BRACKET-EVAP	SGCC-M	1	**SA**

5-1-5 MH020FVEA/MH026FVEA/MH035FVEA/MH052FVEA

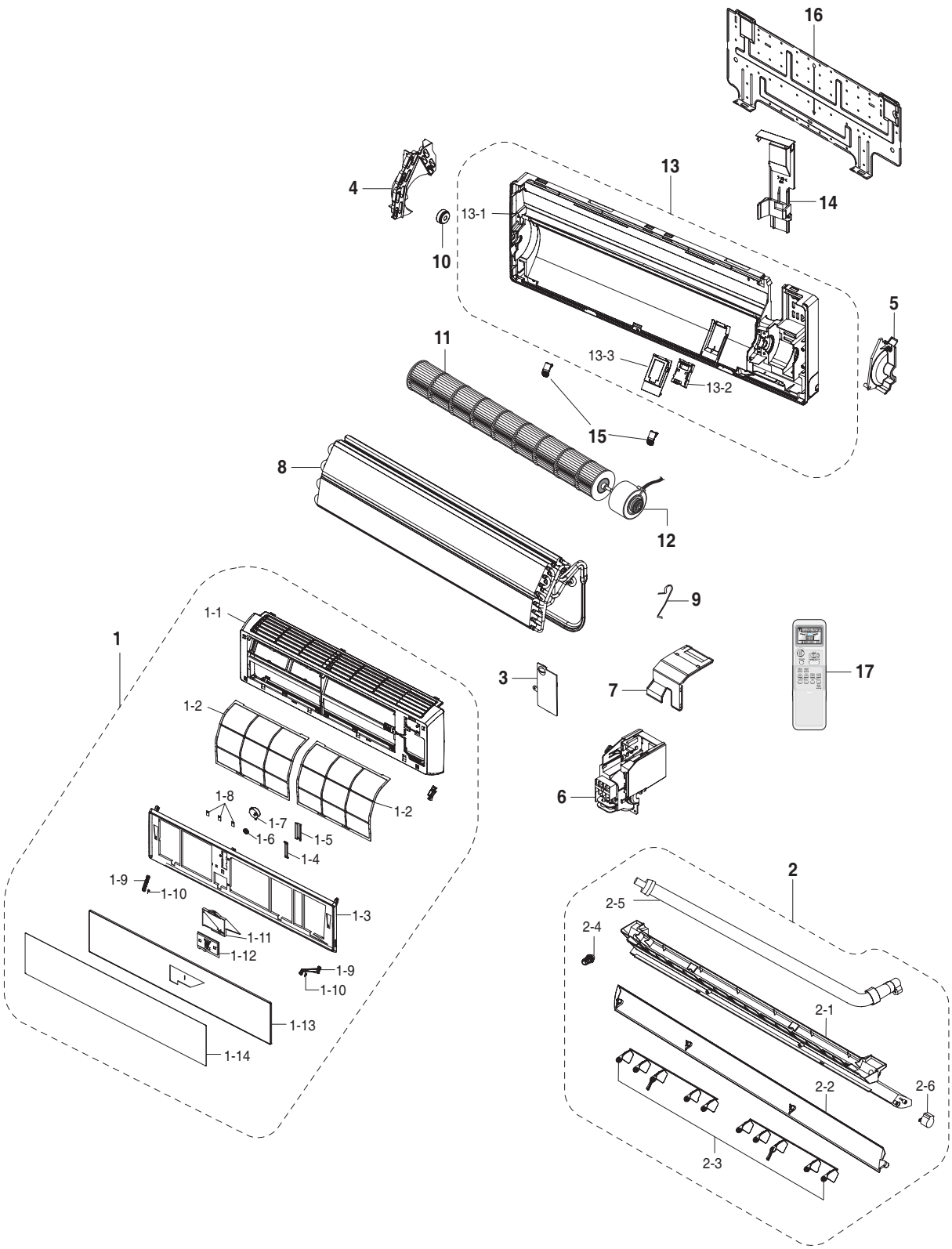

■ **Parts List**

No.	Code No.	Description	Specification	Q'TY			SA/SNA
				MH020FVEA	MH026FVEA MH035FVEA	MH052FVEA	
1	DB92-01087K	ASS'Y PANEL FRONT	ASS'Y HALF MIRROR	1	1	-	SNA
	DB92-01086J	ASS'Y PANEL FRONT	ASS'Y HALF MIRROR	-	-	1	SNA
1-1	DB64-01633A	PANEL FRONT	HIPS,EMPIRE SILVER	1	1	-	**SA**
	DB64-01638A	PANEL FRONT	HIPS,EMPIRE SILVER	-	-	1	**SA**
1-2	DB63-01593A	FILTER-PRE	PP,GRAY	2	2	-	**SA**
	DB63-01594A	FILTER-PRE	PP,GRAY	-	-	2	**SA**
1-3	DB64-01634A	PANEL-MID	HIPS,EMPIRE SILVER	1	1	-	**SA**
	DB64-01639A	PANEL-MID	HIPS,EMPIRE SILVER	-	-	1	**SA**
1-4	DB66-01152A	LINK-GRILLE	POM,WHITE	1	1	1	**SA**
1-5	DB66-01156A	GEAR-RACK	POM,WHITE	1	1	1	**SA**
1-6	DB66-01155A	GEAR-PINION	POM,WHITE	1	1	1	**SA**
1-7	DB31-00369B	MOTOR STEP	ASS'Y	1	1	1	**SA**
1-8	DB61-03156A	HOLDER-WIRE	PC,WHITE	-	-	3	**SA**
1-9	DB66-01176A	LINK-SUPPORT	POM,WHITE	4	4	4	**SA**
1-10	DB61-03139A	SPRING ETC-GRILLE	STS	1	1	-	**SA**
	DB61-03139B	SPRING ETC-GRILLE	STS	1	1	-	**SA**
	DB61-03139C	SPRING ETC-GRILLE	STS	-	-	1	**SA**
	DB61-03139D	SPRING ETC-GRILLE	STS	-	-	1	**SA**
1-11	DB63-01630A	COVER-DISPLAY	ABS-FR(17)	1	1	1	**SA**
1-12	DB93-04452F	ASS'Y DISPLAY	ASS'Y	1	1	1	**SA**
1-13	DB61-02910A	FRAME-GRILLE	ASS'Y	1	1	-	**SA**
	DB61-02913A	FRAME-GRILLE	ASS'Y	-	-	1	**SA**
1-14	DB92-01052A	ASS'Y WINDOW MIRROR	ASS'Y	1	1	-	SNA
	DB92-01052B	ASS'Y WINDOW MIRROR	ASS'Y	-	-	1	SNA
2	DB94-01237A	ASS'Y TRAY DRAIN	ASS'Y	1	1	-	**SA**
	DB94-01245A	ASS'Y TRAY DRAIN	ASS'Y	-	-	1	**SA**
2-1	DB63-01578A	TRAY DRAIN	ASS'Y	1	1	-	**SA**
	DB63-01581A	TRAY DRAIN	ASS'Y	-	-	1	**SA**
2-2	DB61-02908A	BLADE-H	ABS, EMPIRE SILVER	1	1	-	**SA**
	DB61-02914A	BLADE-H	ABS, EMPIRE SILVER	-	-	1	**SA**
2-3	DB61-01636A	BLADE-V	PP	2	2	-	**SA**
	DB61-01976A	BLADE-V	PP	-	-	2	**SA**
2-4	DB73-00180A	RUBBER-CAP DRAIN	GUM-EPM	1	1	1	SNA
2-5	DB94-00458B	ASS'Y DRAIN-HOSE	ASS'Y	1	1	1	**SA**
2-6	DB31-00371A	MOTOR STEP	ASS'Y	1	1	-	**SA**
	DB31-00370A	MOTOR STEP	ASS'Y	-	-	1	**SA**
3	DB63-00844D	COVER-TERMINAL	HIPS,V0	1	1	-	**SA**
	DB63-01063C	COVER-TERMINAL	HIPS,V0	-	-	1	**SA**
4	DB63-00850A	COVER-BEARING	ABS,BLACK	1	1	-	SNA
	DB63-01065A	COVER-BEARING	ABS,BLACK	-	-	1	SNA

■ **Parts List(cont.)**

No.	Code No.	Description	Specification	Q'TY			SA/SNA
				MH020FVEA	MH026FVEA MH035FVEA	MH052FVEA	
5	DB96-03149A	ASS'Y EVAP-SUPPORT RH	ASS'Y	1	1	-	**SA**
	DB96-03817A	ASS'Y EVAP-SUPPORT RH	ASS'Y	-	-	1	**SA**
6	DB93-04636A	ASS'Y CONTROL IN	ASS'Y	1	1	-	SNA
	DB93-04664A	ASS'Y CONTROL IN	ASS'Y	-	-	1	SNA
7	DB90-02167B	ASS'Y COVER-CONTROL IN	ASS'Y	1	1	-	**SA**
	DB90-02082A	ASS'Y COVER-CONTROL IN	ASS'Y	-	-	1	**SA**
8	DB96-07613A	ASS'Y EVAP-TOTAL	ASS'Y	-	1	-	SNA
	DB96-06587D	ASS'Y EVAP-TOTAL	ASS'Y	-	-	1	SNA
	DB96-09014A	ASS'Y EVAP-TATAL	ASS'Y	1	-	-	SNA
9	DB67-60030A	SPRING-SENSOR	STS301	2	2	2	SNA
10	DB94-00455A	ASS'Y BEARING-RUBBER	ASS'Y	1	1	1	**SA**
11	DB94-00456A	ASS'Y-CROSS FAN	ASS'Y	1	1	-	**SA**
	DB94-00456B	ASS'Y-CROSS FAN	ASS'Y	-	-	1	**SA**
12	DB31-00219A	MOTOR FAN	ASS'Y	1	1	-	**SA**
	DB31-00267A	MOTOR FAN	ASS'Y	-	-	1	**SA**
13	DB94-01152B	ASS'Y-BODY BACK	ASS'Y	1	1	-	**SA**
	DB94-01153B	ASS'Y-BODY BACK	ASS'Y	-	-	1	**SA**
13-1	DB61-03028A	BODY BACK	HIPS	1	1	-	**SA**
	DB61-03029A	BODY BACK	HIPS	-	-	1	**SA**
13-2	DB93-04230A	ASS'Y-COMPACT MPI	ASS'Y	1	1	-	**SA**
13-3	DB63-01583A	COVER-MPI	HIPS	1	1	-	**SA**
14	DB61-01638B	HOLDER-PIPE	HIPS	1	1	-	**SA**
	DB61-01981B	HOLDER-PIPE	HIPS	-	-	1	**SA**
15	DB67-00499C	CAP-SCREW	HIPS,EMPIRE SILVER	2	2	3	**SA**
16	DB97-02851C	PLATE-HANGER	SGCC-M	1	1	-	SNA
	DB90-02738A	PLATE-HANGER	SGCC-M	-	-	1	SNA
17	DB93-04700S	ASS'Y REMOCON	ASS'Y	1	1	-	**SA**

5-1-6 MH020FAEA/MH026FAEA/MH035FAEA/MH052FAEA

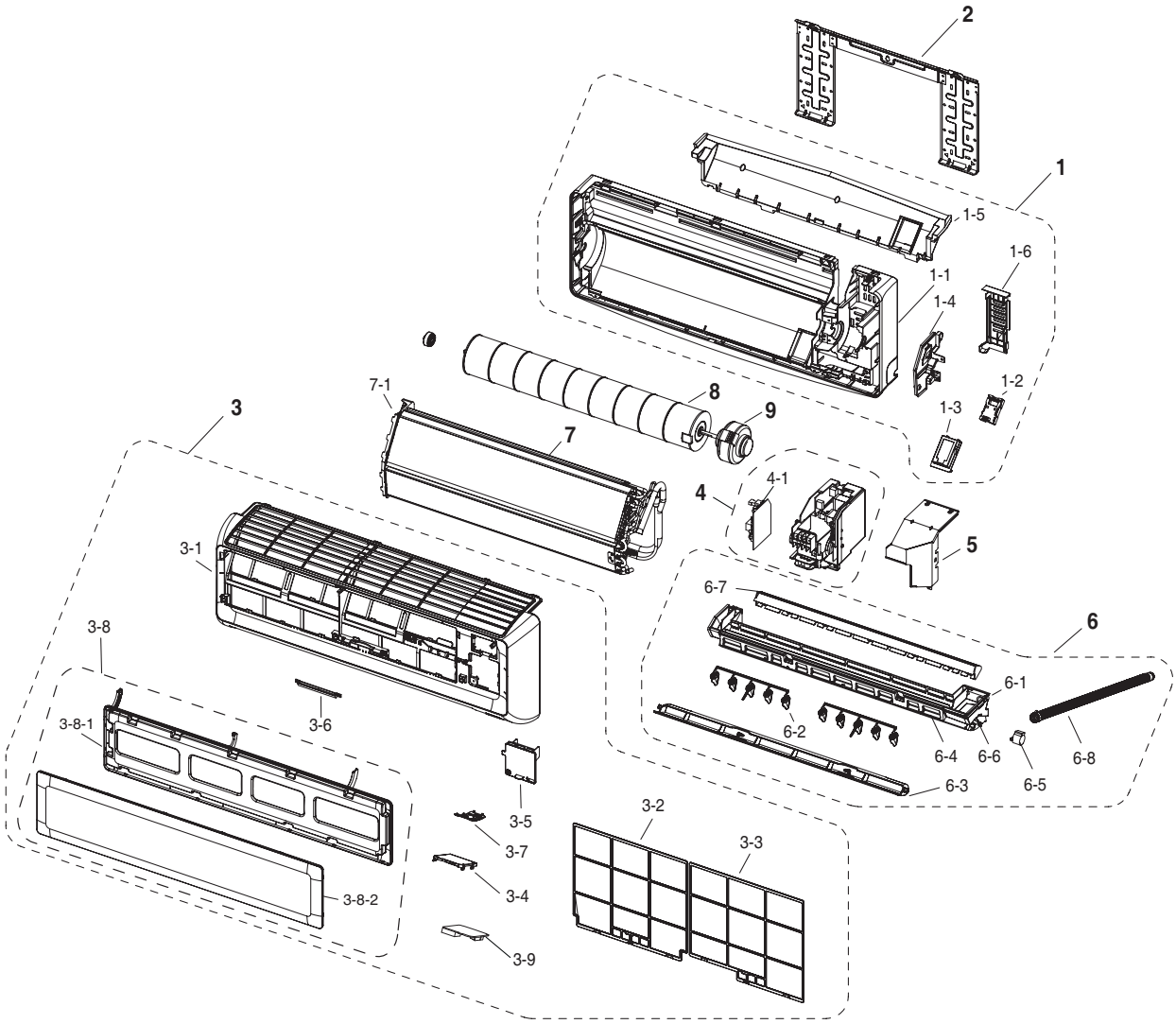

■ **Parts List**

No.	Code No.	Description	Specification	Q'TY		SA/SNA
				MH020FAEA MH026FAEA MH035FAEA	MH052FAEA	
1	DB94-01921A	ASS'Y BACK BODY	ASS'Y	1	-	**SA**
	DB94-01153C	ASS'Y BACK BODY	ASS'Y	-	1	**SA**
1-1	DB61-03656A	BODY BACK	HIPS	1	-	SNA
	DB61-03029B	BODY BACK	HIPS	-	1	SNA
1-2	DB93-04230B	ASS'Y-MPI	ASS'Y	1	1	**SA**
1-3	DB63-01812B	COVER-MPI	HIPS	1	-	**SA**
	DB63-01583B	COVER-MPI	HIPS	-	1	**SA**
1-4	DB61-03651B	SUPPORT-EVAP RH	HIPS	1	-	**SA**
	DB61-03659B	SUPPORT-MOTER IN	HIPS	-	1	**SA**
1-5	DB62-05888A	SEAL-INSUL BODY REAR	EPS(30)	1	-	**SA**
	DB62-04475A	INSULATION-BODY BACK	EPS(30)	-	1	**SA**
1-6	DB61-03666A	HOLDER-PIPE	HIPS	1	-	**SA**
	DB61-01981C	HOLDER-PIPE	HIPS	-	1	**SA**
2	DB97-02851C	ASS'Y-PLATE HANGER	SGCC-M, T0.6	1	-	**SA**
	DB90-02738A	ASS'Y-PLATE HANGER	SGCC-M, T0.6	-	1	**SA**
3	DB92-01831A	ASS'Y PANEL FRONT	ASS'Y	1	-	**SA**
	DB92-01402S	ASS'Y PANEL FRONT	ASS'Y	-	1	**SA**
3-1	DB64-02124A	PANEL FRONT	HIPS	1	-	SNA
	DB64-02128A	PANEL FRONT	HIPS	-	1	SNA
3-2	DB63-02143A	FILTER-PRE L	PP	1	-	**SA**
	DB63-02129A	FILTER-PRE L	PP	-	1	**SA**
3-3	DB63-02144A	FILTER-PRE R	PP	1	-	**SA**
	DB63-02130A	FILTER-PRE R	PP	-	1	**SA**
3-4	DB90-04375F	ASS'Y CASE-PCB	ASS'Y	1	1	**SA**
3-5	DB63-02120B	COVER TERMINAL	HIPS(5V)	1	-	**SA**
	DB63-02132B	COVER TERMINAL	HIPS(5V)	-	1	**SA**
3-6	DB93-07043A	ASS'Y DISPLAY-MPI	ASS'Y	1	-	**SA**
	DB93-07043B	ASS'Y DISPLAY-MPI	ASS'Y	-	1	**SA**
3-7	DB90-04305C	ASS'Y COVER DISPLAY	ASS'Y	1	-	**SA**
	DB90-04301A	ASS'Y COVER DISPLAY	ASS'Y	-	1	**SA**
3-8	DB92-01407G	ASS'Y GRILLE	ASS'Y	1	-	**SA**
	DB92-01399F	ASS'Y GRILLE	ASS'Y	-	1	**SA**
3-8-1	DB64-02126A	GRILLE-FRAME	transparent ABS	1	-	**SA**
	DB64-02130A	GRILLE-FRAME DLX	transparent ABS	-	1	**SA**
3-8-2	DB64-02125C	GRILLE-WINDOW	transparent ABS	1	-	SNA
	DB64-02129E	GRILLE-AIR INLET	transparent ABS	-	1	SNA
3-9	DB93-06984H	ASS'Y PCB SUB-DISPLAY	ASS'Y	1	1	**SA**
4	DB93-08636A	ASS'Y CONTROL IN	ASS'Y	1	-	**SA**
	DB93-08675A	ASS'Y CONTROL IN	ASS'Y	-	1	**SA**
4-1	DB93-08241A	ASS'Y PCB MAIN	ASS'Y	1	-	**SA**
	DB93-08241B	ASS'Y PCB MAIN	ASS'Y	-	1	**SA**

■ **Parts List(cont.)**

No.	Code No.	Description	Specification	Q'TY		SA/SNA
				MH020FAEA MH026FAEA MH035FAEA	MH052FAEA	
5	DB90-04385A	ASS'Y COVER CONTROL IN	SGCC-M, T0.5	1	-	**SA**
	DB90-04703A	ASS'Y COVER CONTROL IN	SGCC-M, T0.5	-	1	**SA**
6	DB94-01922A	ASS'Y TRAY DRAIN	ASS'Y	1	-	**SA**
	DB94-01925B	ASS'Y TRAY DRAIN	ASS'Y	-	1	**SA**
6-1	DB63-02118A	TRAY DRAIN	ABS	1	-	SNA
	DB63-01071A	TRAY DRAIN	ABS	-	1	SNA
6-2	DB61-03672A	BLADE-V	PP	2	-	**SA**
	DB61-03660A	BLADE-V	PP	-	2	**SA**
6-3	DB61-03649A	BLADE-H	ABS	1	-	**SA**
	DB61-03661A	BLADE-H	ABS	-	1	**SA**
6-4	DB62-05892A	INSULATION-TRAY FR	EPS(30)	1	-	**SA**
	DB62-05903A	SEAL-INSUL TRAY FR	EPS(30)	-	1	**SA**
6-5	DB31-00371A	MOTOR STEP	"DC12V,600gf.cm"	1	-	**SA**
	DB31-00370A	MOTOR STEP	"DC12V,800gf.cm"	-	1	**SA**
6-6	DB69-00839A	CUSHION-TRAY RH	EPS(30)	1	-	**SA**
	DB69-01024A	CUSHION	EPS(30)	-	1	**SA**
6-7	DB63-02121A	TRAY-STABILIZER	HIPS	1	-	**SA**
	DB63-01066A	TRAY-STABILIZER	HIPS	-	1	**SA**
6-8	DB94-01975A	ASS'Y DRAIN-HOSE	ASS'Y	1	-	**SA**
	DB94-00458D	ASS'Y DRAIN-HOSE	ASS'Y	-	1	**SA**
7	DB96-13100A	ASS'Y EVAP TOTAL	ASS'Y	1	-	**SA**
	DB96-13136A	ASS'Y EVAP TOTAL	ASS'Y	-	1	**SA**
7-1	DB61-03650A	HOLDER-EVAP	HIPS	1	-	**SA**
	DB63-01065A	COVER-BEARING	HIPS	-	1	**SA**
8	DB94-01874A	ASS'Y-CROSS FAN	ASS'Y(AS+GF20%)	1	-	**SA**
	DB94-01556B	ASS'Y-CROSS FAN	ASS'Y(AS+GF20%)	-	1	**SA**
9	DB31-00531A	MOTOR FAN	50Hz	1	-	**SA**
	DB31-00533A	MOTOR FAN	50Hz	-	1	**SA**

5-1-7 MH026FSEA/MH035FSEA

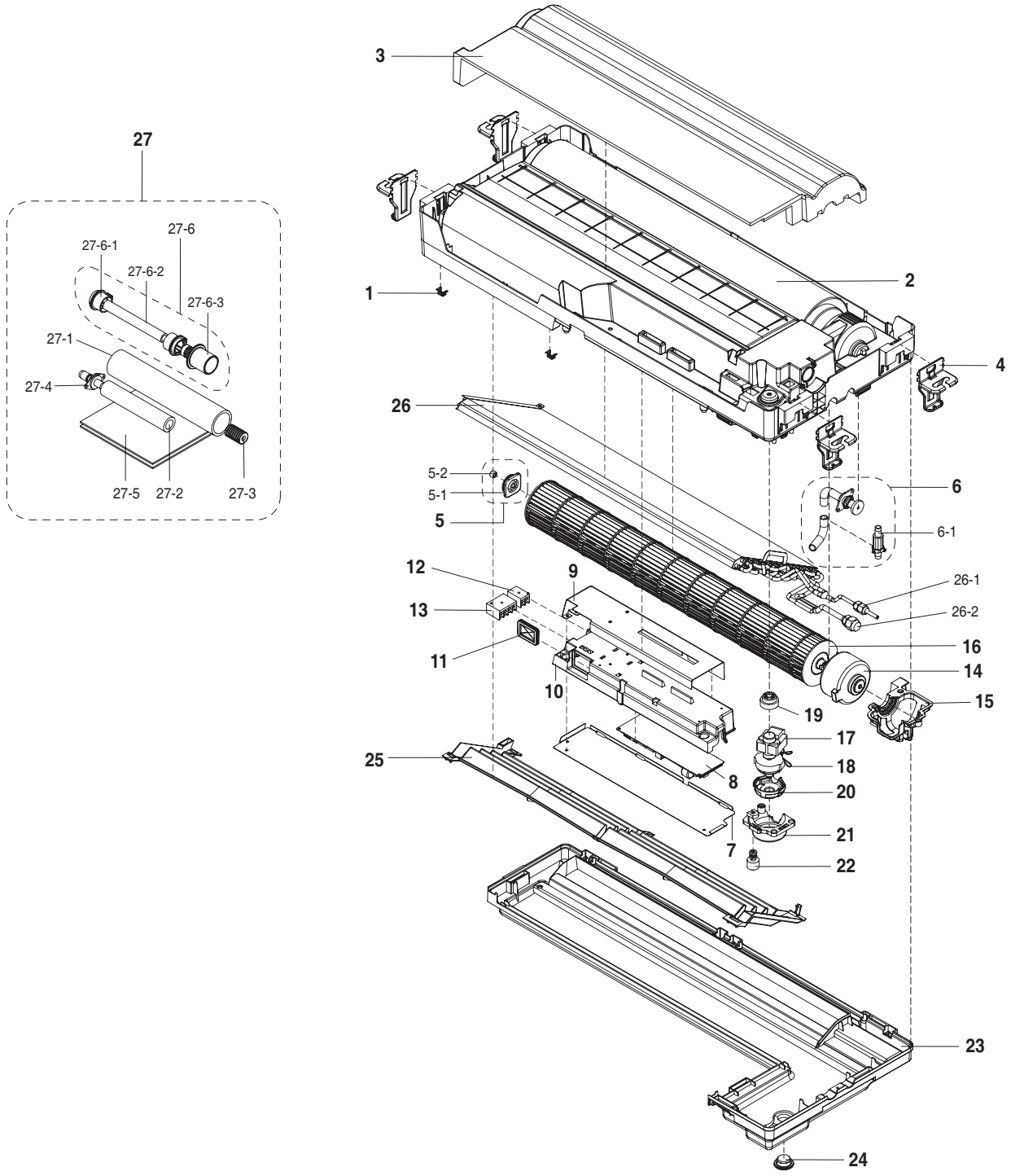

■ **Parts List**

No.	Code No.	Description	Specification	Q'TY	SA/SNA
1	DB61-03127A	BRACKET-PAN	SGCC-M,1.0,12,20,	2	SNA
2	DB64-01763A	CABINET-IN	ABS,3,417,1011,-,GRAY	1	SNA
3	DB64-01764A	CABINET-CUSHION	EPS,-,310,835,-,WHT	1	SNA
4	DB70-00753A	PLATE-HANGER	SGCC-M,1.2,73,100	4	**SA**
5	DB94-00258A	ASS'Y BEARING	G-PJT,CR,BLK	1	**SA**
5-1	DB73-00128A	RUBBER-BEARING	G-P/J,CR,55,BLK	1	SNA
5-2	DB94-40007A	ASS'Y BEARING	ASS'Y,POLYSLIDER-PG5	1	**SA**
6	DB94-01546A	ASS'Y-DRAIN SOCKET	ASS'Y	1	SNA
6-1	DB62-04236A	VALVE CHECK	ASS'Y,72.5	1	**SA**
7	DB70-00754A	PLATE-COVER CONTROL	SGCC-M,0.7,96,428	1	SNA
8	DB93-07192A	ASS'Y PCB MAIN	FR-4,1.6T,230mmx70mm,SMPS	1	**SA**
9	DB61-03126A	CASE-CONTROL	ABS,2.5,113,430,BLK	1	SNA
10	DB70-00755A	PLATE-CASE CONTROL	SGCC-M,0.7,96,428	1	SNA
11	DB73-00307A	RUBBER-WIRE HOLE	NBR,52.1,BLK	1	SNA
12	DB95-01058D	ASS'Y-TERMINAL BLOCK	2P	1	SNA
13	DB95-01101E	ASS'Y-TERMINAL BLOCK	4P,F1,F2,V1,V2	1	SNA
14	DB31-00436A	MOTOR FAN	SFN-220-20-4B-1,0.3A,40W,220V/230V,1250,50/60Hz, B,E,YH396-05VRT/YT396B-RT,700,ST730679-3,500	1	**SA**
15	DB63-01698A	COVER MOTOR	ABS,2.5,147,135,GRAY	1	SNA
16	DB94-00040Y	ASS'Y-CROSS FAN	ASS'Y	1	**SA**
17	DB67-00833A	DRAIN-PUMP	PBT,1.0,WHITE	1	**SA**
18	DB69-00137A	BAND-RING	STS304,T1.5,PI14	1	SNA
19	DB73-00390B	RUBBER-BASE PUMP	NBR,30,BLK	1	SNA
20	DB73-00391B	RUBBER-CAP PUMP	NBR,30,BLK	1	SNA
21	DB63-01699A	COVER-PUMP	ABS,2.5,78,100,GRAY	1	SNA
22	DB95-01359F	ASS'Y-SENSOR FLOAT SLIM1WAY	SmH250-02L,180mm,RED,BLK	1	**SA**
23	DB94-01367C	ASS'Y DRAIN PAN	ASS'Y	1	**SA**
24	DB73-00133B	RUBBER-CAP DRAIN SOCKET	NBR,38.30.27.24/15.12.9.4,45,15,BLK	1	SNA
25	DB94-01492A	ASS'Y DRAIN PAN-SUB	ASS'Y	1	**SA**
26	DB96-08129C	ASS'Y EVAP TOTAL	ASS'Y	1	**SA**
26-1	DB60-30010A	NUT-FLARE	HEX,7/16-20UnF	1	**SA**
26-2	DB60-30010B	NUT-FLARE	HEX,3/4-16UnF	1	**SA**
27	DB94-01904B	ASS'Y DRAIN-HOSE INSTALL	ASS'Y	1	**SA**
27-1	DB62-05810A	SEAL-DRAIN ASS'Y	ASS'Y	1	SNA
27-2	DB62-04783A	INSULATION DRAIN-HOSE	FOAM-PE,T12,20,165,GREY,NON FLAmmABILITY	1	SNA
27-3	DB63-00237A	GROMMET-HANGER	NBR	8	SNA
27-4	DB67-00285A	DRAIN HOSE-SOCKET	POM,T3	1	SNA
27-5	DB72-00401C	INSULATION JOINT-OUT	FOAM-PE,T3,W200,L200,GREY	2	SNA
27-6	DB94-01258C	ASS'Y DRAIN-HOSE JOINT	ASS'Y	1	**SA**
27-6-1	DB67-00335A	DRAIN HOSE-HOUSING	BLUE	2	SNA
27-6-2	DB67-00336E	HOSE DRAIN-PVC	SOFT PVC,14,20,3,GRAY	1	SNA
27-6-3	DB67-00805B	DRAIN HOSE-JOINT B	ABS,T3.0,NORmAL	1	**SA**

■ PSSMA(Slim 1 way Cassette Panel)

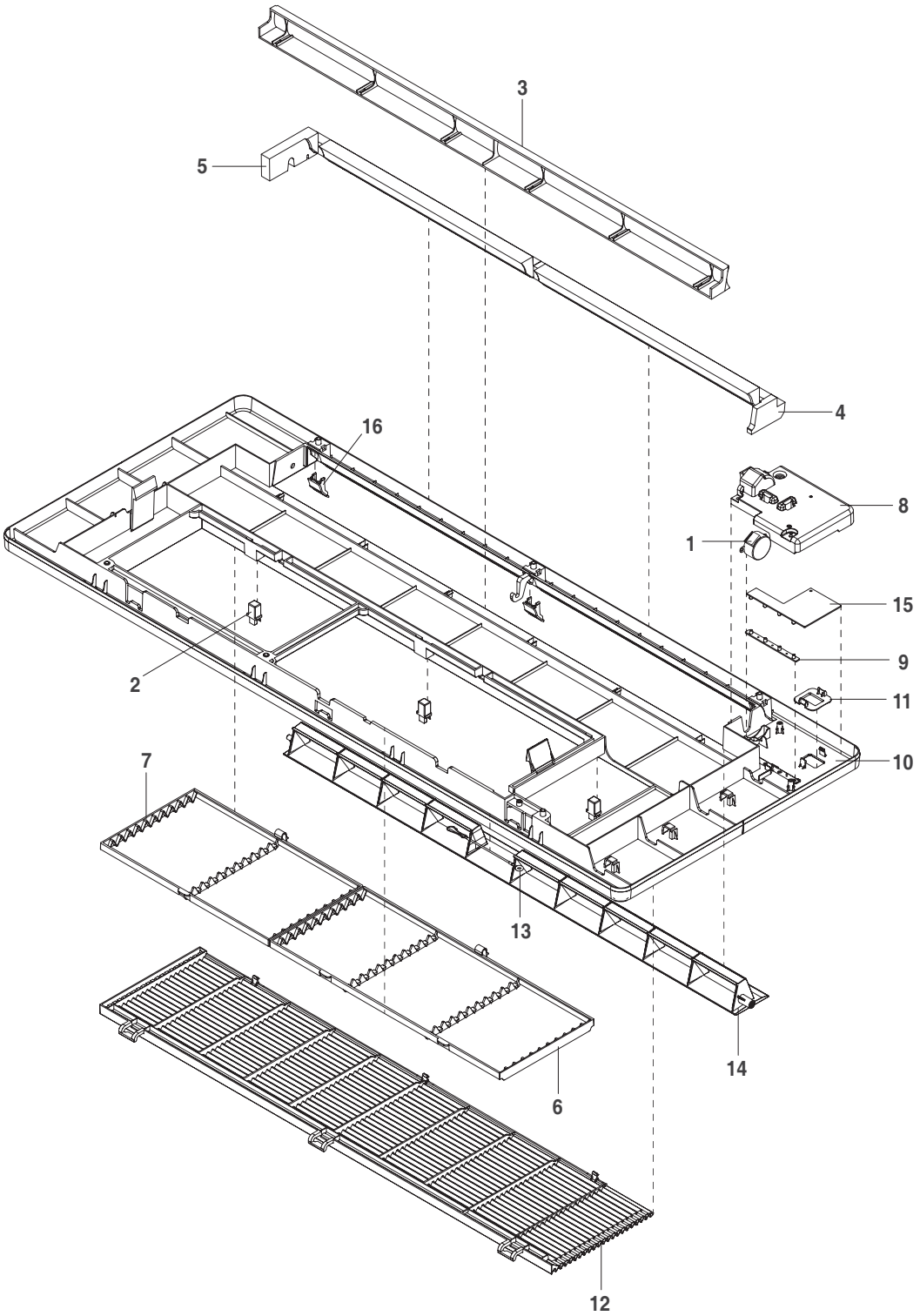

■ **Parts List**

No.	Code No.	Description	Specification	Q'TY	SA/SNA
1	DB31-00370A	MOTOR STEP	35BYJ46,DC12V800gf.cm,SmH250-05L(WHT),100mm	1	**SA**
2	DB61-02894A	HOLDER-PUSH LATCH	POM,PC+PE,11.9,12.9,21,BLACK	3	**SA**
3	DB61-03123A	GUIDE-AIR OUTLET	HIPS,2.5,70,860,GRAY	1	SNA
4	DB61-03124A	GUIDE-CUSHION AIR OUT LF	EPS,105,426,WHT	1	SNA
5	DB61-03125A	GUIDE-CUSHION AIR OUT RH	EPS,105,463,WHT	1	SNA
6	DB63-01694A	FILTER-AIR INLET	ABS,2,196,437,BLK	1	**SA**
7	DB63-01695A	FILTER-AIR INLET G	ABS,2,196,320,BLK	1	**SA**
8	DB63-01697A	COVER-DISPLAY PCB	HIPS,2.5,117,154,BLK	1	SNA
9	DB64-00237A	PANEL-DISPLAY LED	AKM-2800,PC	1	**SA**
10	DB64-01759A	PANEL FRONT-SLIM 1WAY	ABS,40,465,1180,DA White	1	SNA
11	DB64-01760A	WINDOW-DISPLAY PCB	PC,1.5,40,40,-,MILKY WHT	1	SNA
12	DB64-01762A	GRILLE-AIR INLET	ABS,2.0,213,859,WHT	1	**SA**
13	DB65-00023A	CLIP-WIRE-ASS'Y	NYLON,AG-240E	1	SNA
14	DB66-01187A	BLADE-G	ABS,5,11.6,WHT	1	SNA
15	DB93-05321A	ASS'Y PCB SUB	FR-1,LEAD FREE	1	SNA
16	DB63-01696A	COVER-SCREW	ABS,2.5,19,34,WHT	1	SNA

5-1-8 MH030FMEA/MH035FMEA/MH052FMEA

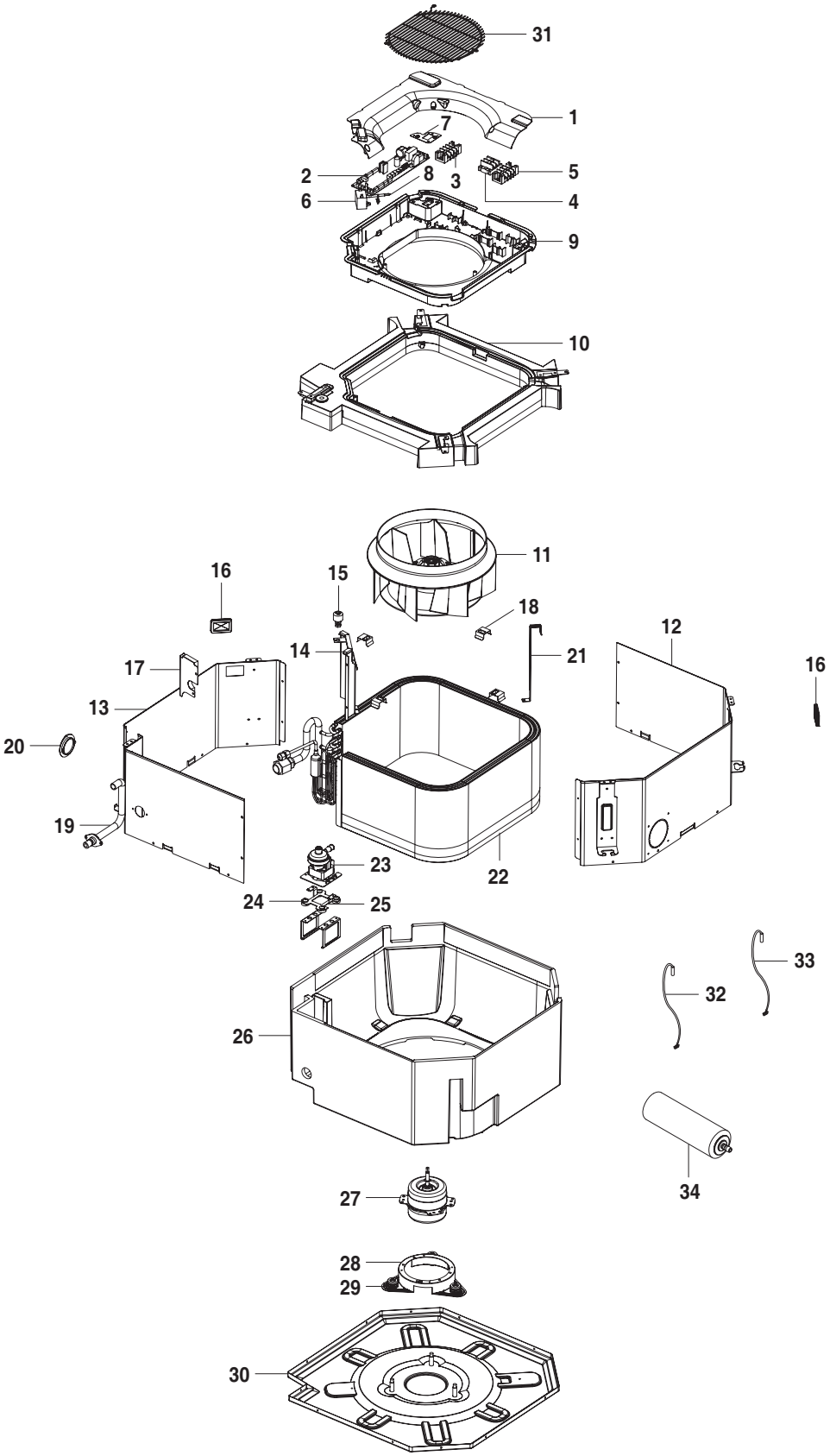

■ **Parts List**

No.	Code No.	Description	Specification	Q'TY		SA/SNA
				MH030FMEA MH035FMEA	MH052FMEA	
1	DB63-01367A	COVER CONTROL	ABS(V0),T2.0	1	1	SNA
2	DB93-04102A	ASS'Y PCB MAIN	MINI 4WAY CASSETTE	1	1	SNA
3	DB65-00029M	TERMINAL BLOCK 4P	1(L),2(N),Vc,Vc	1	1	**SA**
4	DB65-00182A	TERMINAL BLOCK 2P	F1,F2	1	1	**SA**
5	DB65-00029Z	TERMINAL BLOCK 4P	V1,V2,F3,F4	1	1	**SA**
6	2301-001378	C-FILM,LEAD-OTHER	450VAC,3.5uF	1	1	**SA**
7	DB61-02499A	BRACKET EARTH WIRE	SGCC-M,T1.0	1	1	**SA**
8	DB32-00067D	THERMISTOR WIRE IN PCB	103AT,-20~100˚C	1	1	**SA**
9	DB61-02486A	BASE CONTROL	ABS(V0),T2.0	1	1	SNA
10	DB94-00826A	ASS'Y DRAIN PAN	MINI 4WAY CASSETTE	1	1	**SA**
11	DB94-00812A	ASS'Y FAN TURBO	SAN+GF20%	1	1	**SA**
12	DB90-02221A	ASS'Y CABI SIDE A	MINI 4WAY CASSETTE	1	1	**SA**
13	DB90-02220A	ASS'Y CABI SIDE B	MINI 4WAY CASSETTE	1	1	**SA**
14	DB94-00847B	ASS'Y PARTITION	MINI 4WAY CASSETTE	1	1	**SA**
15	DB95-00131K	ASS'Y SENSOR FLOAT	250mm,MINI 4WAY CASSETTE	1	1	**SA**
16	DB73-00307A	RUBBER WIRE HOLE	NBR 45˚C	2	2	SNA
17	DB90-02225A	ASS'Y COVER PIPE	MINI 4WAY CASSETTE	1	1	**SA**
18	DB61-02527A	HOLDER EVAP	STS304,T0.7	4	4	**SA**
19	DB94-00846A	ASS'Y DRAIN HOSE	MINI 4WAY CASSETTE	1	1	**SA**
20	DB90-01010A	ASS'Y COVER DRAIN	CH040EZM,NEW 4WAY CASSETTE	1	1	SNA
21	DB61-02490A	GUIDE EVAP	STS304,T0.7	1	1	**SA**
22	DB96-05977B	ASS'Y EVAP UNIT	MINI 4WAY CASSETTE	1	-	SNA
	DB96-05354C	ASS'Y EVAP UNIT	MINI 4WAY CASSETTE	-	1	SNA
23	DB31-00303A	PUMP DRAIN	FUJIKOKI,220V 50Hz,60Hz	1	1	**SA**
24	DB73-00022C	RUBBER PUMP	EPDM+BUTYL,40~45˚	4	4	SNA
25	DB61-02492A	BRAKCET PUMP	SGCC-M,T1.5	1	1	**SA**
26	DB90-02223A	ASS'Y BASE CUSHION	MINI 4WAY CASSETTE	1	1	**SA**
27	DB31-00305A	MOTOR FAN	ASS035WTVA,4WAYMINI- PJT,50Hz	1	1	**SA**
28	DB61-02495A	BRACKET MOTOR IN	SGCC-M,T1.2	1	1	**SA**
29	DB63-01407A	GROMMET MOTOR	NR,35˚	3	3	**SA**
30	DB90-02222A	ASS'Y CABI BASE	MINI 4WAY CASSETTE	1	1	**SA**
31	DB63-01372A	GUARD SAFTY	HSWR,T2.5	1	1	**SA**
32	DB32-00066E	THERMISTOR EVAP IN	300mm,MINI 4WAY CASSETTE	1	1	**SA**
33	DB32-00029K	THERMISTOR EVAP OUT	280mm,MINI 4WAY CASSETTE	1	1	**SA**
34	DB94-01287B	ASS'Y DRAIN HOSE INSTALL	MINI 4WAY CASSETTE	1	-	SNA
	DB94-01287A	ASS'Y DRAIN HOSE INSTALL	MINI 4WAY CASSETTE	-	1	SNA

■ PMSMA(Mini 4 way Cassette Panel)

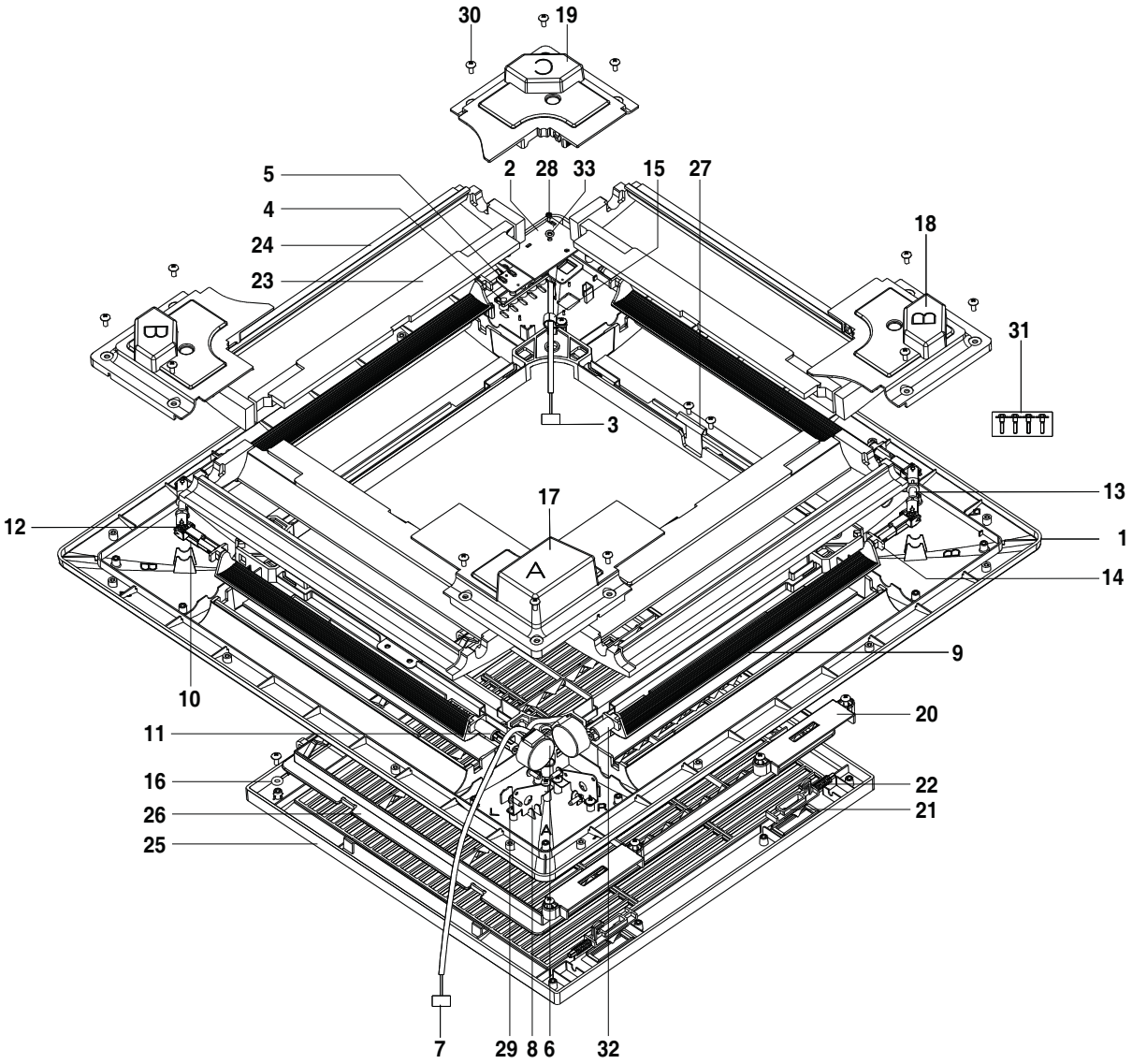

■ **Parts List**

No.	Code No.	Description	Specification	Q'TY	SA/SNA
1	DB64-01421A	PANEL-FRONT	ABS,T3.0,WHT	1	**SA**
2	DB93-02803A	ASS'Y PCB MAIN	ASS'Y	1	**SA**
3	DB39-00082E	CONNECT WIRE-DISPLAY PCB	L990mm	1	**SA**
4	DB64-01422A	BUTTON-PCB	ABS,BLK	1	**SA**
5	DB64-01424A	INLAY-PCB	PC,WHT	1	**SA**
6	DB31-00285A	MOTOR STEPPING	35BYJ46-276,800G.CM,12V	2	**SA**
7	DB39-00542E	CONNECT WIRE-STEP MOTOR	L320mm	1	**SA**
8	DB61-02485B	BRACKET MOTOR-PANEL	SGCC-M,T0.8	2	**SA**
9	DB66-01008A	BLADE-H	PBT/ABS,T3.5	4	**SA**
10	DB61-01871A	CONNECTOR-BLADE	POM,NTR	4	**SA**
11	DB61-02480A	CONNECTOR-MOTOR A	POM,NTR	1	**SA**
12	DB66-00756A	JOINT UNIVERSAL	POM,NTR	4	**SA**
13	DB66-01009A	LINK-BLADE	POM,NTR	2	**SA**
14	DB61-02488A	BUSH-MINI	POM,NTR	8	**SA**
15	DB65-10074D	CLAMP-CABLE	DA-4N	2	**SA**
16	DB65-00023A	CLIP-WIRE-ASS'Y	L130mm	1	**SA**
17	DB63-01364A	COVER-A	ABS(V0),BLK	1	**SA**
18	DB63-01366A	COVER-B	ABS(V1),BLK	2	**SA**
19	DB63-01377A	COVER-C	ABS(V2),BLK	1	**SA**
20	DB63-01036A	COVER-KNOB	HIPS,UL94-HB,WHT	2	**SA**
21	DB64-01145A	KNOB-SLIDE	HIPS,94HB,HG-0760,WHT	2	**SA**
22	DB67-00030A	SPRING-KNOB	STS304,T0.5	2	**SA**
23	DB69-01269A	CUSHION-IN	EPS,30	4	**SA**
24	DB69-01270A	CUSHION-OUT	EPS,30	4	**SA**
25	DB64-01420A	GRILLE-AIR INLET	ABS,WHT	1	**SA**
26	DB63-01423A	FILTER-PRE MINI	PP,BLK,ANTI BACTERIAL FILTER	1	**SA**
27	DB70-00302A	PLATE-HANGER	STS304,T0.5	2	**SA**
28	6002-000534	SCREW-TAPPING	PH,2S,M3,L8,ZPC(BLK),SWRCH18A	1	SNA
29	6002-000536	SCREW-TAPPING	PH,2S,M4,ZPC(YEL)	4	SNA
30	6002-001079	SCREW-TAPPING	TH,2S,M4,L10	27	SNA
31	6011-001493	BOLT-HEX	M6,L10,ZPC(YEL),SWRM18A	4	**SA**
32	DB61-02480B	CONNECTOR-MOTOR B	POM,NATURAL	1	**SA**
33	-	WASHER	-	1	SNA

5-1-9 MH026FJEA/MH035FJEA/MH052FJEA

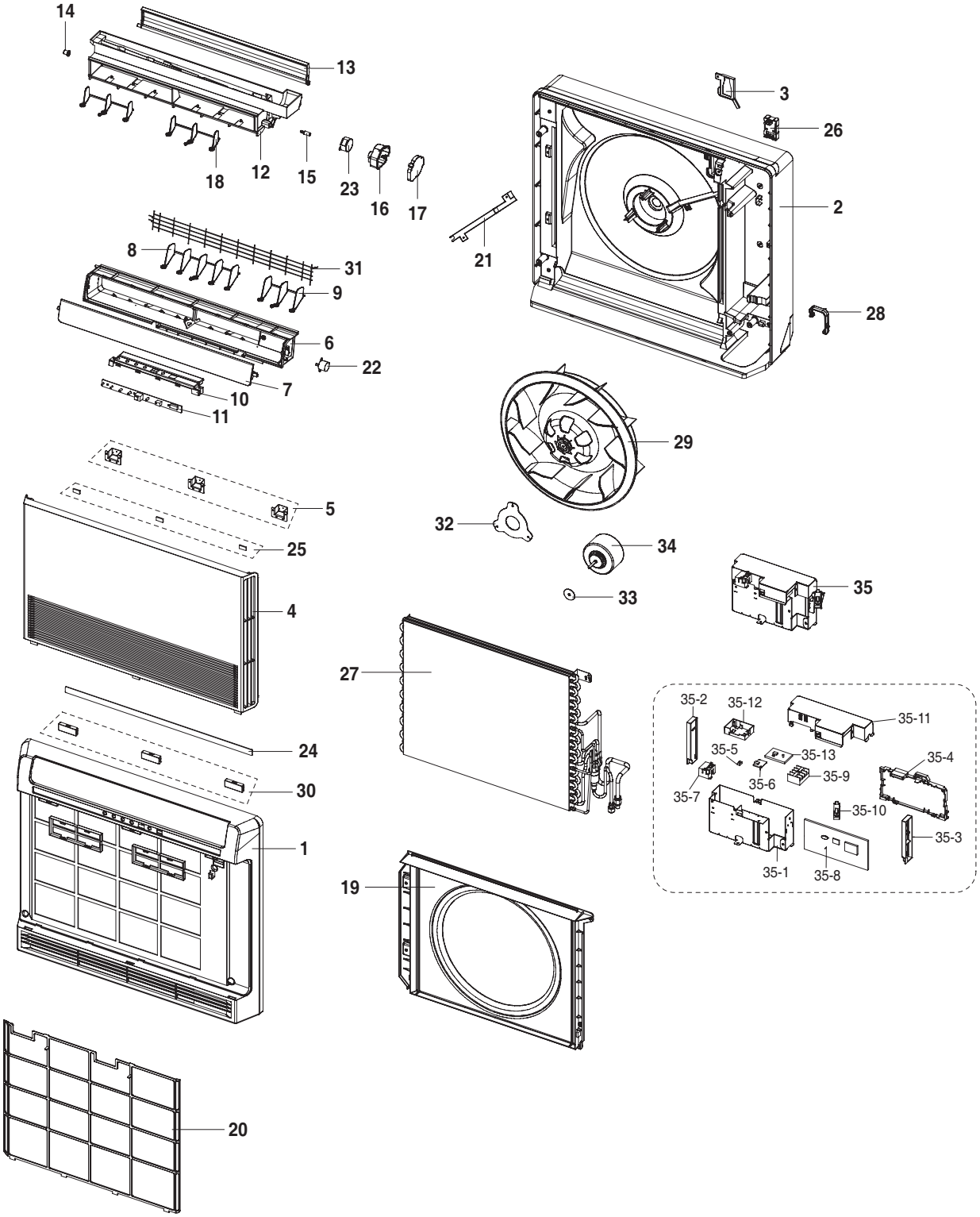

■ **Parts List**

No.	Code No.	Description	Specification	Q'TY		SA/SNA
				MH026FJEA MH035FJEA	MH052FJEA	
1	DB61-03545A	BODY FRONT	HIPS,T2.5	1	1	SA
2	DB61-03547A	BODY BACK	HIPS,T2.5	1	1	SA
3	DB67-00899A	CAP MPI	HIPS,T1.8	1	1	SA
4	DB64-02060A	PANEL FRONT	HIPS,T2.5	1	-	SA
	DB64-02181A	PANEL FRONT	HIPS,T2.5	-	1	SA
5	DB67-00898A	CAP MAGNET	PC,T1.0	3	3	SA
6	DB61-03544A	BODY TOP DISCHARGE	HIPS,T2.5	1	1	SA
7	DB66-01282A	BLADE TOP H	HIPS,T2.5	1	1	SA
8	DB66-01281A	BLADE TOP V LF	PP,T2.7	1	1	SA
9	DB66-01280A	BLADE TOP V RH	PP,T2.7	1	1	SA
10	DB61-03543A	CASE DISPLAY PCB	PP,T1.0	1	1	SA
11	DB90-03848A	ASS'Y CASE DISPLAY PCB	ASS'Y	1	-	SA
	DB90-03848B	ASS'Y CASE DISPLAY PCB	ASS'Y	-	1	SA
12	DB61-03546A	BODY BOTTOM DISCHARGE	HIPS,T2.5	1	1	SA
13	DB66-01284A	BLADE BOTTOM H	HIPS,T2.5	1	1	SA
14	DB66-01286A	LINK BOTTOM BLADE LF	POM	1	1	SA
15	DB66-01285A	LINK BOTTOM BLADE RH	POM	1	1	SA
16	DB61-03553A	CASE MOTOR STEP	ABS V0,T2.5	1	1	SA
17	DB67-00897A	CAP MOTOR STEP	ABS V0,T2.5	1	1	SA
18	DB66-01283A	BLADE BOTTOM V	PP,T2.7	2	2	SA
19	DB61-03559A	BODY BELL MOUTH	HIPS,T2.5	1	1	SA
20	DB63-01998A	FILTER AIR	PP,T2.5	1	1	SA
21	DB61-03551A	BRACKET WIRE MOLD	HIPS,T1.8	1	1	SA
22	DB31-00371A	MOTOR STEP	ABS V0,T2.5	1	1	SA
23	DB31-00370A	MOTOR STEP	ABS V0,T2.5	1	1	SA
24	DB90-03823A	ASS'Y HALF MIRROR DISPLAY	PMMA,T2.0,594x17	1	1	SA
25	DB61-01477A	MAGNET	20x10x3,GAUSS 2,400~2,600	1	1	SA
26	DB93-04230C	COMPACT MPI	-	1	1	SA
27	DB96-09853A	ASS'Y EVAP	ASS'Y	1	-	SA
	DB96-11811A	ASS'Y EVAP	ASS'Y	-	1	SA
28	DB61-03542A	BRACKET PIPE	PP,T2.5	1	1	SA
29	DB31-00507A	FAN TURBO	SAN GF20%,Ø410,H76	1	1	SA
30	DB70-00923A	PLATE STEEL	SGCC-M,T0.8	1	1	SA
31	DB63-01999A	GUARD TOP OUTLET	HSWR,Ø1.5	1	1	SA
32	DB61-03554A	BRACKET MOTOR	SGCC-M,T2.0	1	1	SA
33	DB70-00921A	PLATE MOTOR	SGCC-M,T1.0	1	1	SA
34	DB31-00517A	MOTOR FAN	SIC-55CV-F137-1,SIBAURA	1	1	SA
35	DB93-06165B	ASS'Y CONTROL IN	ASS'Y	1	-	SNA
	DB93-06165F	ASS'Y CONTROL IN	ASS'Y	-	1	SNA
35-1	DB90-03842A	ASS'Y CASE CONTROL PD	ASS'Y	1	1	SA

■ **Parts List(cont.)**

No.	Code No.	Description	Specification	Q'TY		SA/SNA
				MH026FJEA MH035FJEA	MH052FJEA	
35-2	DB61-03540A	SLIDER CASE PCB A	ABS V0,T2.5	1	1	**SA**
35-3	DB61-03541A	SLIDER CASE PCB B	ABS V0,T2.5	1	1	**SA**
35-4	DB61-03537A	CASE PCB MAIN	ABS V0,T2.5	1	1	**SA**
35-5	DB67-00896A	CAP SWITCH	ABS V0,T2.0	1	1	**SA**
35-6	DB93-06169A	ASS'Y PCB SUB SWITCH	PBA	1	1	**SA**
35-7	DB61-03549A	CASE PCB SWITCH	ABS V0,T2.5	1	1	**SA**
35-8	DB93-07023B	ASS'Y PCB MAIN IN	PBA	1	-	**SA**
	DB93-07023E	ASS'Y PCB MAIN IN	PBA	-	1	**SA**
35-9	DB65-00004U	TERMINAL BLOCK	4P	1	1	SNA
35-10	DB61-40291C	HOLDER WIRE	-	1	1	**SA**
35-11	DB63-02001A	COVER CONTROL	SGCC-M,T0.5	1	1	**SA**
35-12	DB61-03550A	CASE PCB ADDRESS	ABS V0,T2.5	1	1	**SA**
35-13	DB93-04640C	ASS'Y PCB SUB	PBA	1	1	**SA**

5-1-10 NJ026LHXEA/NJ035LHXEA

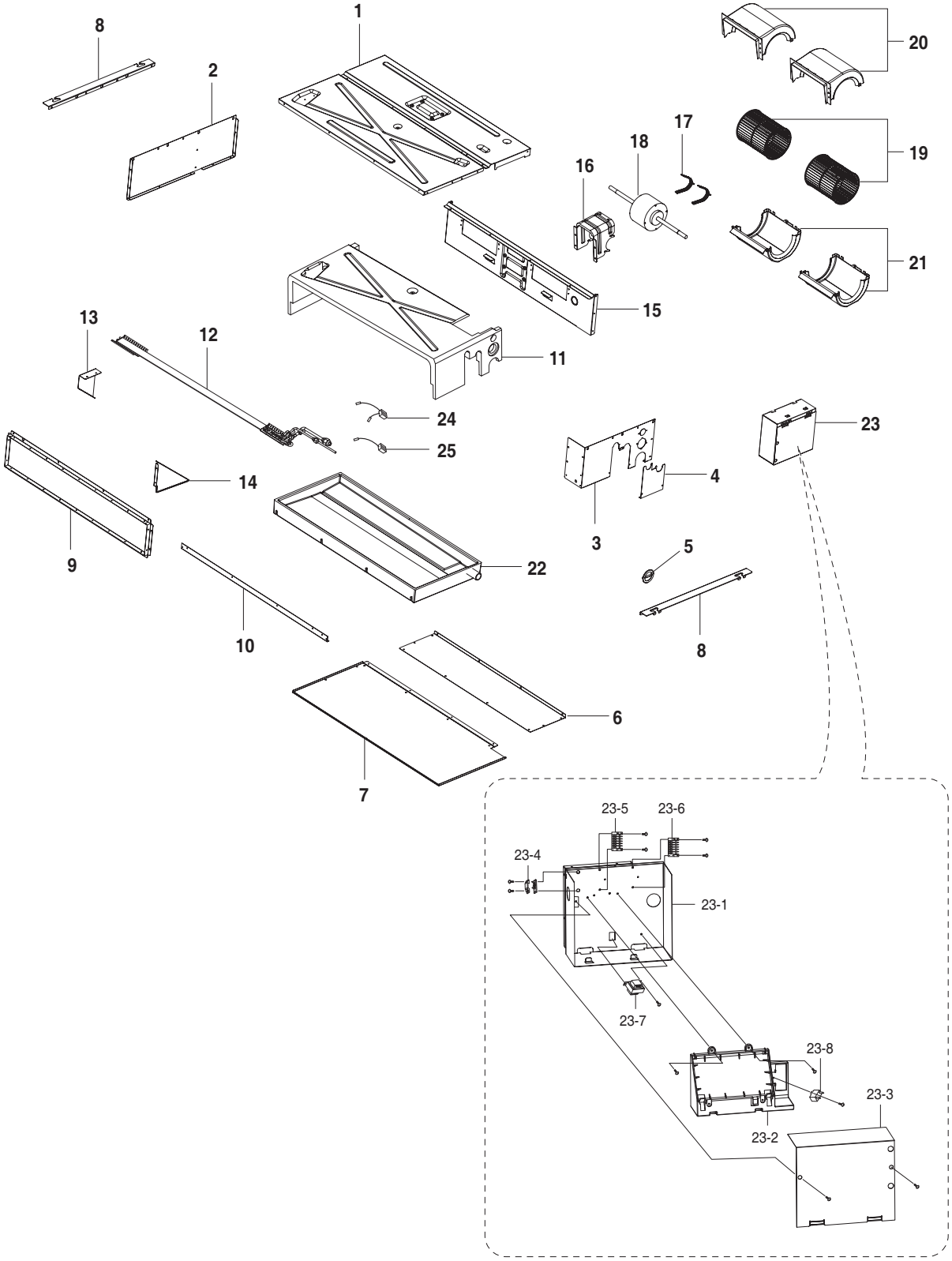

■ **Parts List**

No.	Code No.	Description	Specification	Q'TY	SA/SNA
1	DB90-02014A	ASS'Y CABINET BASE	ASS'Y	1	**SA**
2	DB64-01324A	ASS'Y CABINET SIDE LF	ASS'Y	1	**SA**
3	DB90-01951A	ASS'Y CABINET SIDE RH	ASS'Y	1	**SA**
4	DB90-01938A	ASS'Y COVER PIPE	ASS'Y	1	**SA**
5	DB90-01950A	ASS'Y COVER DRAIN PUMP	ABS T2.0	1	**SA**
6	DB64-01326A	CABINET TOP MOTOR	SGCC-M, T0.8	1	**SA**
7	DB90-02069A	ASS'Y CABINET TOP EVAP	ASS'Y	1	**SA**
8	DB61-02274A	PLATE HANGER	SGCC-M T2.0	2	**SA**
9	DB94-00712A	ASS'Y BRACKET OUTLET	ASS'Y	1	**SA**
10	DB61-02277A	BRACKET OUTLET SUB	SGCC-M, T0.8	1	**SA**
11	DB90-03397A	ASS'Y CUSHION BASE	ASS'Y	1	**SA**
12	DB96-05289A	ASS'Y EVAP UNIT	ASS'Y	1	**SA**
13	DB90-01978A	ASS'Y SUPPORT EVAP LF	ASS'Y	1	**SA**
14	DB90-01946A	ASS'Y SUPPORT EVAP RH	ASS'Y	1	**SA**
15	DB94-00768A	ASS'Y PARTITION	ASS'Y	1	**SA**
16	DB61-02282A	BRACKET MOTOR	SGCC-M T2.0	1	**SA**
17	DB99-00669A	ASS'Y BAND MOTOR	SINYA	1	SNA
18	DB31-00312A	MOTOR FAN	SINYA, SSR, PID	1	**SA**
19	DB67-00565A	BLOWER	ASS'Y, ABS, TORSIONAL BUSH	2	**SA**
20	DB90-01947A	ASS'Y CASE BLOWER UPPER	ASS'Y	2	**SA**
21	DB90-01948A	ASS'Y CASE BLOWER BOTTOM	ASS'Y	2	**SA**
22	DB94-01007B	ASS'Y DRAIN PAN	ASS'Y	1	SNA
23	DB93-03321K	ASS'Y CONTROL IN	ASS'Y	1	**SA**
23-1	DB90-01941B	ASS'Y CASE CONTROL	ASS'Y	1	**SA**
23-2	DB61-02287A	CASE PCB	ABS T2.5	1	**SA**
23-3	DB63-01237A	COVER CONTROL	SGCC-M T0.5	1	**SA**
23-4	DB61-40291A	HOLDER WIRE	PP BLACK	1	SNA
23-5	DB65-00105L	TERMINAL BLOCK 6P	6P, POWER	1	SNA
23-6	DB65-00105M	TERMINAL BLOCK 6P	6P, COMMUNICATION	1	SNA
23-7	DB26-00080A	TRANS POWER	230V, 50HZ	1	SNA
23-8	2301-001370	CAPACITOR	450V 1.5μF	1	**SA**
24	DB32-00142A	ASS'Y THERMISTOR	ASS'Y	1	**SA**
25	DB32-00141A	THERMISTOR EVAP	ASS'Y	1	SNA

5-1-11 MH052FUEA

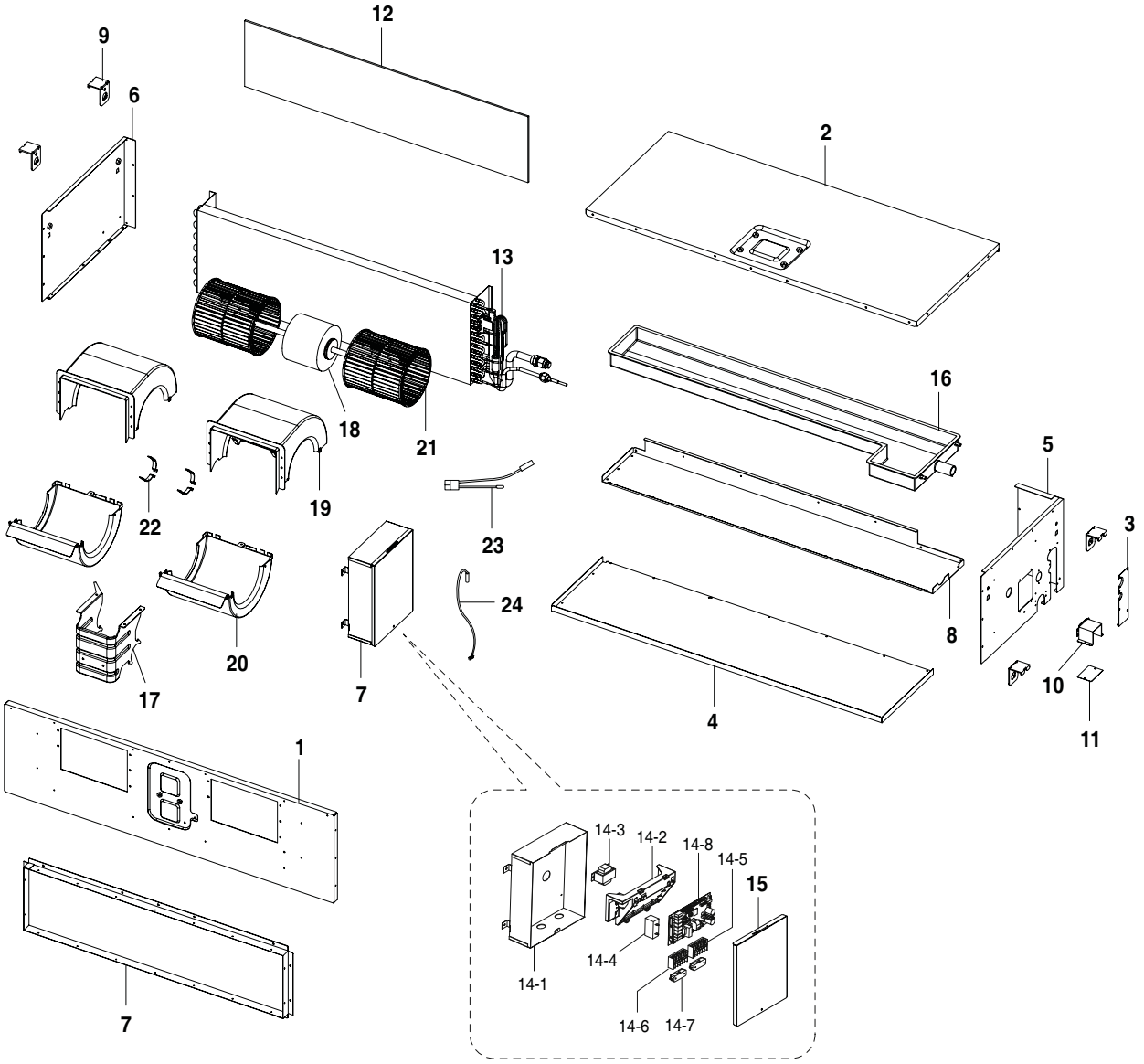

■ **Parts List**

No.	Code No.	Description	Specification	Q'TY	SA/SNA
1	DB90-03809A	ASS'Y CABINET FRONT	ASS'Y	1	**SA**
2	DB90-03805A	ASS'Y CABINET-TOP	ASS'Y	1	**SA**
3	DB90-02928A	ASS'Y COVER-PIPE	ASS'Y	1	**SA**
4	DB90-03807A	ASS'Y CABINET-BOTTOM BLOWER	ASS'Y	1	**SA**
5	DB90-03810A	ASS'Y CABINET-SIDE RH	ASS'Y	1	**SA**
6	DB90-02930A	ASS'Y CABINET-SIDE LF	ASS'Y	1	**SA**
7	DB90-03813A	ASS'Y-BRACKET OUTLET PART	ASS'Y	1	SNA
8	DB90-03808A	ASS'Y CABINET-BOTTOM DRAIN	ASS'Y	1	**SA**
9	DB61-01282A	HOLDER-SIDE CABI	SGCC-M,T3.0,45.2,65	4	SNA
10	DB61-02378A	HOLDER-PIPE	SGCC-M,T1.0	1	SNA
11	DB63-01297A	COVER-HOLDER	SGCC-M,T0.8	1	SNA
12	DB63-01299G	FILTER-PRE	ASS'Y	1	**SA**
13	DB96-09854A	ASS'Y EVAP-UNIT	ASS'Y	1	SNA
14	DB93-06161A	ASS'Y CONTROL IN	ASS'Y	1	SNA
14-1	DB90-02981B	ASS'Y CASE-CONTROL	ASS'Y	1	**SA**
14-2	DB61-02287A	CASE PCB	ABS V0,T2.5	1	**SA**
14-3	DB26-00080A	TRANS POWER	AC 230V,50HZ,DC 17V,DC 0.6A,VDE,ICE	1	SNA
14-4	2301-001381	C-FILM,LEAD-OTHER	8000nF,+10-5%,450V,BK,58x30x44mm	1	**SA**
14-5	DB65-00105L	TERMINAL BLOCK	DAF-S6P	1	**SA**
14-6	DB65-00105M	TERMINAL BLOCK	DAF-S6P	1	**SA**
14-7	DB61-00250A	HOLDER-WIRE CLAMP	ABS,BLK,ISI,SAMLINE	2	SNA
14-8	DB93-03213N	ASS'Y PCB MAIN-IN	ASS'Y	1	SNA
15	DB63-01657A	COVER-CONTROL	SGCC-M,T0.8	1	**SA**
16	DB94-01697A	ASS'Y DRAIN PAN	ASS'Y	1	**SA**
17	DB61-03058A	BRACKET MOTOR	SGCC-M,T2.0	1	**SA**
18	DB31-00514A	MOTOR FAN	YSK-140-200-4E1,0.7A,50HZ	1	SNA
19	DB90-04047A	ASS'Y CASE BLOWER UPPER	ABS,T2.0	2	**SA**
20	DB61-03060A	CASE BLOWER-BOTTOM	ABS,T2.0	2	**SA**
21	DB67-00583A	BLOWER-C	ABS	2	**SA**
22	DB97-03751A	ASS'Y-BAND MOTOR	ASS'Y	1	SNA
23	DB32-00142B	THERMISTOR-IN	10Kohm,103AT,-20~+100	1	**SA**
24	DB32-00141D	THERMISTOR EVAP	10Kohm,103AT,-20~+100	1	**SA**

5-1-12 AQV07/09/12/18/24PSBN

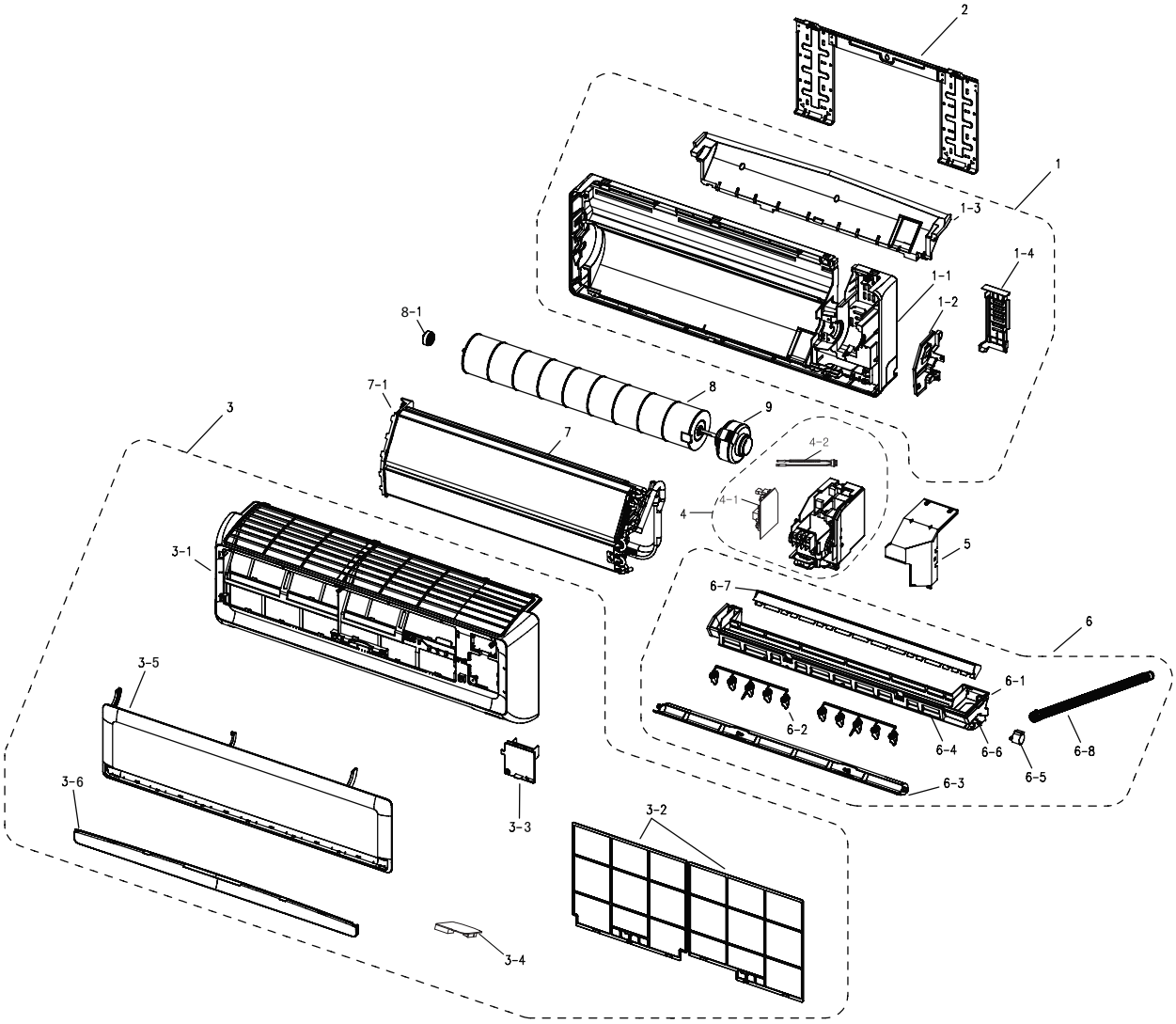

■ Parts List

No.	Code No.	Description	Specification	Qty	SA/SNA
				AQ07/09/12PSBN	
1	DB94-01923B	ASSY BACK BODY	ASSY	1	SA
1-1	DB61-03656A	BODY BACK	HIPS	1	SA
1-2	DB61-03651B	SUPPORT-EVAP RH	HIPS	1	SA
1-3	DB62-05888A	SEAL-INSUL BODY REAR	EPS(30)	1	SA
1-4	DB61-03666A	HOLDER-PIPE	HIPS	1	SA
2	DB97-02851C	ASSY-PLATE HANGER	SGCC-M, T0.7	1	SA
3	DB92-02280A	ASSY PANEL FRONT	ASSY	1	SA
3-1	DB64-02561A	PANEL FRONT	HIPS	1	SA
3-2	DB63-02760A	FILTER-PRE	PP	2	SA
3-3	DB97-11240C	ASSY COVER TERMINAL	ASSY	1	SA
3-4	DB90-06134B	ASSY COVER DISPLAY	ASSY	1	SA
3-5	DB64-02553C	GRILLE-AIR INLET	HIPS	1	SA
3-6	DB64-02550A	DECO-GRILLE	HIPS	1	SA
4	DB93-10953A	ASSY CONTROL IN	ASSY	1	SA
4-1	DB93-10955A	ASSY PCB MAIN IN	PCB	1	SA
4-2	DB95-04570B	ASSY THERMISTOR IN	SENSOR	1	SA
5	DB90-04385A	ASSY COVER CONTROL IN	T0.5	1	SA
6	DB94-02960A	ASSY TRAY DRAIN	ASSY	1	SA
6-1	DB63-02118A	TRAY DRAIN	ABS	1	SA
6-2	DB61-03672A	BLADE-V	PP	2	SA
6-3	DB66-01559A	BLADE-H	ABS	1	SA
6-4	DB62-05892A	INSULATION-TRAY FR	FR EPS(30)	1	SA
6-5	DB31-00371A	MOTOR STEP	DC12V,600gf.cm	1	SA
6-6	DB69-00839A	CUSHION-TRAY RH	EPS(30)	1	SA
6-7	DB63-02121A	TRAY-STABILIZER	HIPS	1	SA
6-8	DB94-00458D	ASSY DRAIN-HOSE	ASSY	1	SA
7	DB96-11359B	ASSY EVAP TOTAL	ASSY	1	SA
7-1	DB61-03650A	HOLDER-EVAP	HIPS	1	SA
8	DB94-01874A	ASSY-CROSS FAN ASSY	AS +GF 30%	1	SA
8-1	DB94-00455B	ASSY RUBBER BEARING	ASSY	1	SA
9	DB31-00531D	MOTOR FAN	ASSY	1	SA

■ Parts List

No.	Code No.	Description	Specification	Qty		SA/SNA
				AQ18PSBN	AQ24PSBN	
1	DB94-00615F	ASSY BACK BODY	ASSY	1	1	SA
1-1	DB61-04681A	BODY BACK	HIPS	1	1	SA
1-2	DB90-04857A	SUPPORT-EVAP RH	HIPS	1	1	SA
1-3	DB69-01039A	SEAL-INSUL BODY REAR	EPS(30)	1	1	SA
1-4	DB61-01981C	HOLDER-PIPE	HIPS	1	1	SA
2	DB90-02738A	ASSY-PLATE HANGER	SGCC-M, T0.7	1	1	SA
3	DB92-02279A	ASSY PANEL FRONT	ASSY	1	1	SA
3-1	DB64-02568A	PANEL FRONT	HIPS	1	1	SA
3-2	DB63-02758A	FILTER-PRE	PP	2	2	SA
3-3	DB97-11889A	ASSY COVER TERMINAL	ASSY	1	1	SA
3-4	DB90-06135A	ASSY COVER DISPLAY	ASSY	1	1	SA
3-5	DB64-02566C	GRILLE-AIR INLET	HIPS	1	1	SA
3-6	DB64-02567B	DECO-GRILLE	HIPS	1	1	SA
4	DB93-10958A	ASSY CONTROL IN	ASSY	1	0	SA
	DB93-10958C	ASSY CONTROL IN	ASSY	0	1	SA
4-1	DB93-10956A	ASSY PCB MAIN IN	PCB	1	1	SA
4-2	DB95-04570B	ASSY THERMISTOR IN	SENSOR	1	1	SA
5	DB90-06284A	ASSY COVER CONTROL IN	T0.5	1	1	SA
6	DB94-02961A	ASSY TRAY DRAIN	ASSY	1	1	SA
6-1	DB63-01071A	TRAY DRAIN	ABS	1	1	SA
6-2	DB61-03660A	BLADE-V	PP	2	2	SA
6-3	DB66-01560A	BLADE-H	ABS	1	1	SA
6-4	DB62-05903A	INSULATION-TRAY FR	FR EPS(30)	1	1	SA
6-5	DB31-00370A	MOTOR STEP	DC12V,600gf.cm	1	1	SA
6-6	DB69-01024A	CUSHION-TRAY RH	EPS(30)	1	1	SA
6-7	DB63-01066A	TRAY-STABILIZER	HIPS	1	1	SA
6-8	DB94-00458D	ASSY DRAIN-HOSE	ASSY	1	1	SA
7	DB96-11950G	ASSY EVAP TOTAL	ASSY	1	0	SA
	DB96-11950F	ASSY EVAP TOTAL	ASSY	0	1	SA
7-1	DB61-04580A	HOLDER-EVAP	HIPS	1	1	SA
8	DB94-02076A	ASSY-CROSS FAN ASSY	AS +GF 30%	1	1	SA

5-2 Outdoor Unit

5-2-1 RJ040F2HXEA/RJ050F2HXEA

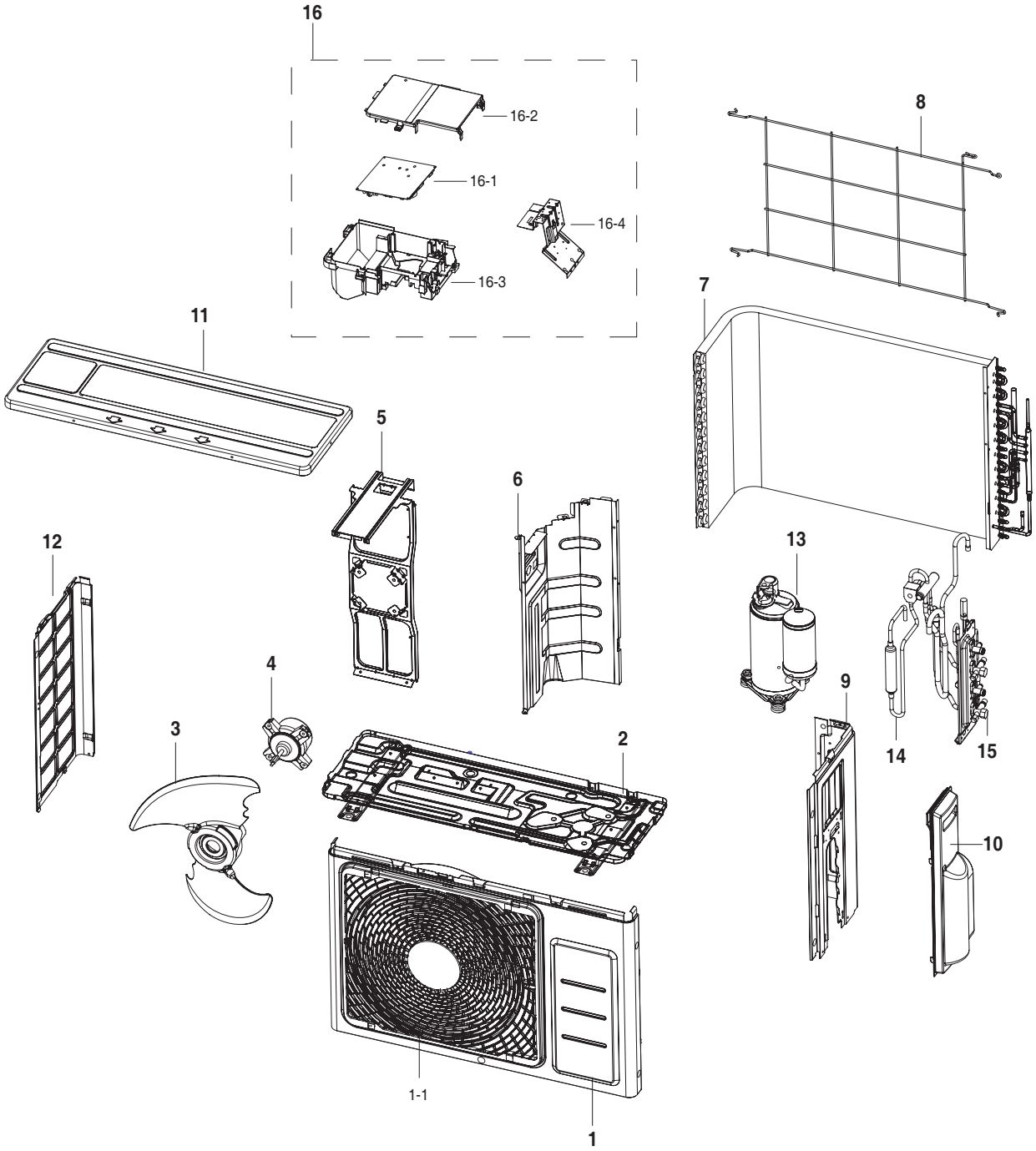

■ **Parts List**

No.	Code No.	Description	Specification	Q'TY		SA/SNA
				RJ040F2HXEA	RJ050F2HXEA	
1	DB90-05739A	ASS'Y CABINET FRONT	ASS'Y	1	1	**SA**
1-1	DB63-02588A	GUARD FAN	PP,SC-90073R	1	1	**SA**
2	DB90-06226A	ASS'Y BASE OUT	ASS'Y	1	1	SA
3	DB94-02657A	FAN PROPELLER	PP	1	1	**SA**
4	DB31-00564A	MOTOR FAN	SGCC-M	1	1	**SA**
5	DB90-06219C	BRACKET MOTOR	ASS'Y	1	0	**SA**
	DB90-06219A	BRACKET MOTOR	ASS'Y	0	1	**SA**
6	DB94-02998A	ASS'Y PARTITION	ASS'Y	1	1	SA
7	DB96-15359A	ASS'Y CONDENSER	ASS'Y	1	0	**SA**
	DB96-15360A	ASS'Y CONDENSER	ASS'Y	0	1	**SA**
8	DB90-06221A	SCREEN-COND BAR	HSWR(SC-90073T)	1	1	**SA**
9	DB90-06294A	ASS'Y CABINET SIDE	ASS'Y	1	1	**SA**
10	DB90-03652A	ASS'Y COVER VALVE	ASS'Y	1	-	**SA**
11	DB90-05736A	ASS'Y CABINET UP	ASS'Y	1	1	**SA**
12	DB90-05749A	ASS'Y CABINET LF	SECC-P	1	1	**SA**
13	UG4T150FUDJQSS	ROTARY COMPRESSOR	BLDC PERMANENT MAGNETIC MOTOR	1	1	**SA**
14	DB96-15272A	ASS'Y VALVE 4-WAY	ASS'Y	1	0	**SA**
	DB96-15309A	ASS'Y VALVE 4-WAY	ASS'Y	0	1	**SA**
15	DB96-15255A	ASS'Y VALVE	ASS'Y	1	0	**SA**
	DB96-15310A	ASS'Y VALVE	ASS'Y	0	1	**SA**
16	DB93-11286A	ASS'Y CONTROL OUT	ASS'Y	1	1	**SNA**
16-1	DB93-10952B	ASS'Y PCB MAIN	ASS'Y	1	1	**SA**
16-2	DB93-10952B	CASE CONTROL-COVER	ASS'Y	1	1	**SA**
16-3	DB61-04877A	CASE CONTROL-BASE	ABS	1	1	**SA**
16-4	DB61-04903A	PLATE-CONTROL OUT TOTAL	SECC-P	1	1	**SNA**

5-2-2 RJ060F3HXEA/RJ070F4HXEA/RJ080F4HXEA

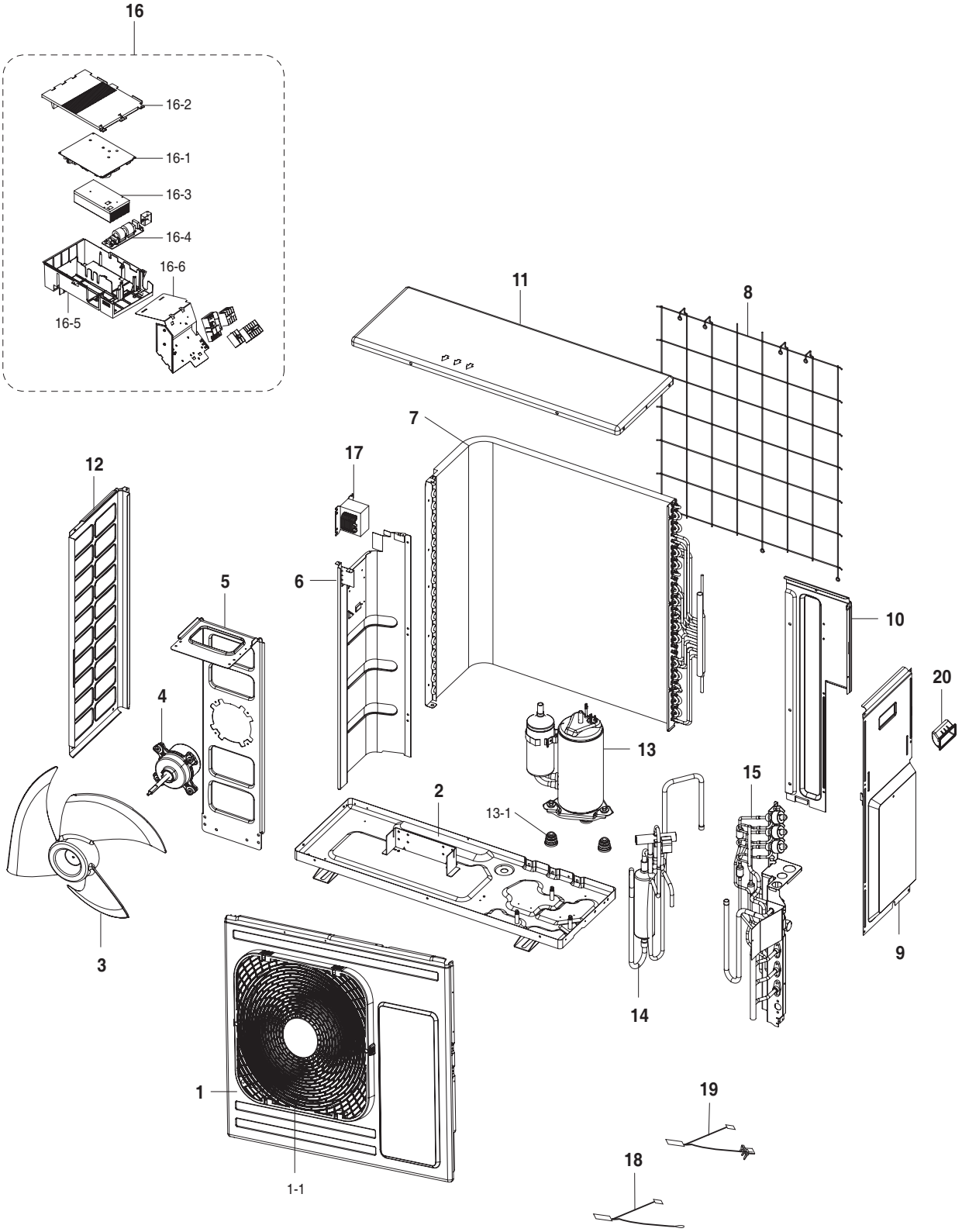

■ **Parts List**

No.	Code No.	Description	Specification	Q'TY			SA/SNA
				RJ060F3HXEA	RJ070F4HXEA	RJ080F4HXEA	
1	DB90-03918K	ASSY CABI FRONT-TOTAL	ASS'Y	1	1	1	SA
1-1	DB63-02226B	GUARD FAN-P	PP,SC-90073R	1	1	1	SA
2	DB90-03278C	ASS'Y BASE OUT-TOTAL	ASS'Y	1	1	1	SA
3	DB67-00861A	FAN PROFELLER	AS-GF 20%	1	1	1	SA
4	DB31-00512F	MOTOR FAN	65A,130W,DC 310V	1	1	1	SA
5	DB61-20094D	BASE MOTOR	SGCC-M	1	1	1	SA
6	DB94-03130A	ASSY PARTITION	ASS'Y	1	1	1	SA
7	DB96-08873A	ASS'Y COND	ASS'Y	1	-	-	SA
	DB96-09223A	ASS'Y COND	ASS'Y	-	1	1	SA
8	DB71-00126A	BAR STEEL	HSWR	1	1	1	SA
9	DB90-03920B	ASSY CABINET-SIDE RH	ASS'Y	1	1	1	SA
10	DB90-03919B	ASS'Y CABI BACK-RH	ABS	1	1	1	SA
11	DB90-03275A	ASS'Y CABINET UP	ASS'Y	1	1	1	SA
12	DB90-03932B	ASSY CABINET-SIDE LF PAINT	ASS'Y	1	1	1	SA
13	G8T200FUAEW	COMPRESSOR	BLDC INVERTER	1	-	-	SA
	G8T260FUAEW	COMPRESSOR	BLDC INVERTER	-	1	1	SA
13-1	DB63-02297A	GROMMET ISOLATOR	NR	3	3	3	SA
14	DB96-08915A	ASS'Y 4WAY VALVE	ASS'Y	1	-	-	SA
	DB96-09230A	ASS'Y 4WAY VALVE	ASS'Y	-	1	1	SA
15	DB96-15586A	ASS'Y VALVE	ASS'Y	1	-	-	SA
	DB96-15579A	ASS'Y VALVE	ASS'Y	-	1	1	SA
16	DB93-11287A	ASSY CONTROL OUT	ASS'Y	1	-	-	SNA
	DB93-11287B	ASSY CONTROL OUT	ASS'Y	-	1	1	SNA
16-1	DB93-10939B	ASSY PCB MAIN	ASS'Y	1	-	-	SA
	DB93-10939C	ASSY PCB MAIN	ASS'Y	-	1	1	SA
16-2	DB61-04910A	CASE CONTROL COVER	ABS	1	1	1	SA
16-3	DB62-10653A	HEAT SINK		1	1	1	SNA
16-4	DB93-11293A	ASSY PCB SUB EMI	ASS'Y	1	-	-	SA
	DB93-10939C	ASS'Y PCB SUB EMI	ASS'Y	-	1	1	SA
16-5	DB61-04908A	CASE CONTROL BASE	ABS	1	1	1	SA
16-6	DB61-04715A	PLATE-CONTROL OUT	SGCC-M	1	1	1	SA
17	DB27-00042B	REACTOR	15A, 50Hz	1	-	-	SA
	DB27-00043C	REACTOR	20A, 50Hz	-	1	1	SA
18	DB95-01976A	THERMISTOR COND	103AT,204CTB	1	1	1	SA
19	DB95-04329A	THERMISTOR WIRE OUT/DISCHARGE	103AT,204CTB	1	1	1	SA
20	DB64-01231A	HANDLE	ABS	1	1	1	SA

5-3 Assy control out

■ RJ040F2HXEA/RJ050F2HXEA

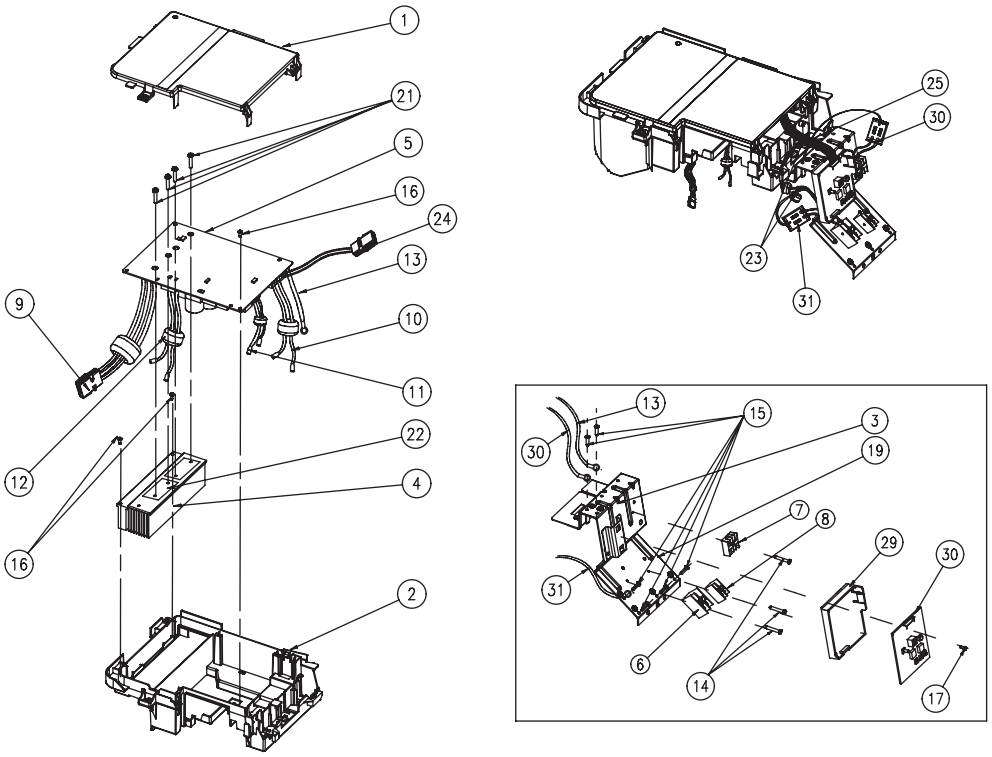

NO	Parts Code	Parts Description	Spec.	Quantity
1	DB61-04885A	CASE CONTROL-UPPER	ABS+PC	1
2	DB61-04877A	CASE CONTROL-OUT	ABS+PC	1
3	DB61-04903A	PLATE-CONTROL OUT TOTAL	GI-SGCC	1
4	DB62-10652A	HEAT SINK	FJM2 SI MODEL,AL,SCREW	1
5	DB93-10952B	ASSY PCB MAIN-OUT	FJM2,4kW/5kW,SSEC,SI,Y,SMPS,5,12V,15V,.3.3V	1
6	DB65-00298B	TERMINAL BLOCK	11R RAC-INVERTER,P.B.T + G30,4-TAB_4-SCREW,600V,47*24.1mm,BLACK,B_Type	1
7	DB65-00303A	TERMINAL BLOCK	11R FJM2,P.B.T + G30,4-SCREW_4-SCREW,600V,35.4*31mm,BLACK,B_Type	1
8	DB65-00061G	TERMINAL BLOCK	HB-P/J,PBT,2-TAB_2-SCREW,Max2.5MM^2,36.4*24.2MM,BLK,A_Type	1
9	DB93-09497A	ASSY CONNECTOR WIRE	SI,AWG16,COMP	1
10	DB93-09495C	ASSY CONNECTOR WIRE-POWER WIRE	SI,AWG14, BRN,SKYBLU	1
11	DB93-11420A	ASSY CONNECTOR WIRE-(SI485 COMM)	FJM2 SI4/5KW,AWG22, RED/BLU	1
12	DB93-09493A	ASSY CONNECTOR WIRE	SI,AWG16, YEL	1
13	DB93-09494A	ASSY CONNECTOR WIRE	SI,AWG16, YEL/GRN	1
14	DB91-00309A	ASSY-SCREW TAPPING	WW-INV,M3*25,PH,+,ZPC(YEL)	3
15	6009-001001	SCREW-SPECIAL	TH,+,WT,M4,L10,ZPC(WHT),SWRCH18A	6
16	6002-000630	SCREW-TAPPING	PH,+,-,2S,M3,L8,ZPC(WHT),SWRCH18A,-	3
17	6002-000536	SCREW-TAPPING	PH,+,NO,2S,M4,L8,ZPC(WHT),STS304,-	1
18	DB98-32914A	ASSY-LABEL CAUTION	h/p,INV,INV,LABEL CAUTION	1
19	DB98-32914B	ASSY-LABEL CAUTION	hp,inv	1
20	DB98-32914D	ASSY-LABEL CAUTION	hp,inv	1
21	DB91-00306A	ASSY-SCREW MACHINE	BLDC INV. CONTROLLER,M3*16,WSP,PH,+,ZPC	4
22	DB98-24813A	ASSY-THERMAL GREASE	INV,radiant heat	2
23	DB65-10088D	CABLE-TIE	NYLON,T1.2,WHITE,L100MM	2
24	DB93-11272A	ASSY CONNECTOR WIRE-MAIN TO SUB	SI,AWG26	1
25	DB93-11419A	ASSY CONNECTOR WIRE-(POWER)	FJM2 SI4/5KW,UL1015	1
26	DB93-11280C	ASSY CONNECTOR WIRE-TERMINAL BLOCK	UL1007,RED	1
27	DB93-11280D	ASSY CONNECTOR WIRE	UL1007,BLUE	1
28	DB61-04755A	CASE-SUB PCB	ABS+PC	1
29	DB93-11285A	ASSY PCB SUB-OUT	FJM2,4kW/5kW,SSEC,SI,N	1
30	DB95-01040P	ASSY-NOISE ABSORBER	FJM2 PF3 MODEL,SSEC	1
31	DB93-10713A	ASSY CONNECTOR WIRE-SUB PBA EMI	EEV RAC,SSEC	1

■ RJ060F3HXEA/RJ070F4HXEA/RJ080F4HXEA

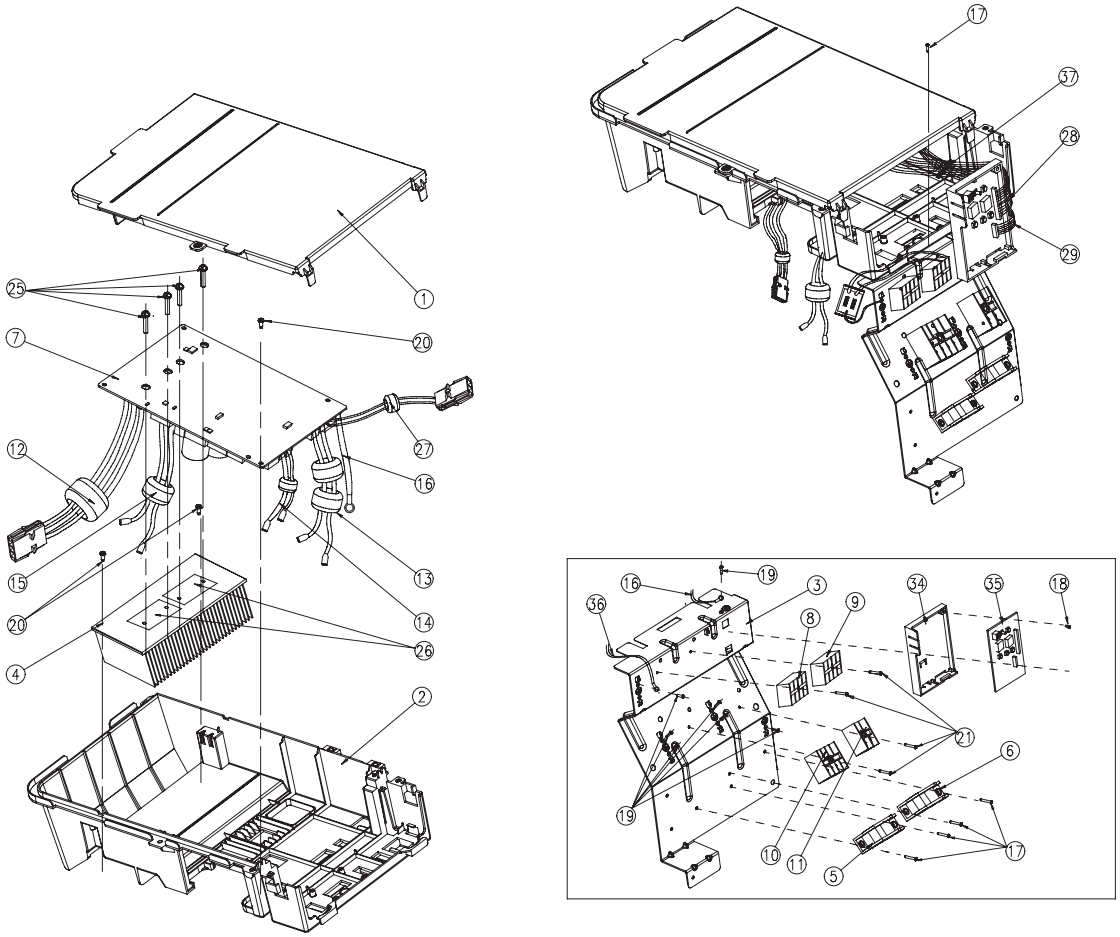

NO	Parts Code	Parts Description	Spec.	RJ060F3HXEA Quantity	RJ070/080F4HXEA Quantity
1	DB61-04910A	CASE CONTROL-UPPER	Q CHASSIS,ABS+PC,GRAY,5V,SSEC	1	1
2	DB61-04908A	CASE CONTROL-OUT	Q CHASSIS,ABS+PC,GRAY,5V,SSEC	1	1
3	DB61-04715A	PLATE-CONTROL OUT	GI-SGCC,0.6	1	1
4	DB62-10653A	HEAT SINK	FJM2 PF3 MODEL,AL,SCREW	1	1
5	DB61-04710A	HOLDER-WIRE CLAMP A	ABS,2.0	1	1
6	DB61-04711A	HOLDER-WIRE CLAMP B	ABS,2.0	1	1
7	DB93-10939B	ASSY PCB MAIN-OUT	FJM2 6K,SSEC,Y,SMPS	1	0
7	DB93-10939C	ASSY PCB MAIN-OUT	FJM2 7K,SSEC,Y,SMPS	0	1
8	DB65-00297A	TERMINAL BLOCK	11R FJM2,P.B.T + G30,4-SCREW_4-SCREW,600V,35.4*32mm,BLACK,B_Type	1	0
8	DB65-00303A	TERMINAL BLOCK	11R FJM2,P.B.T + G30,4-SCREW_4-SCREW,600V,35.4*31mm,BLACK,B_Type	0	1
9	DB65-00303A	TERMINAL BLOCK	11R FJM2,P.B.T + G30,4-SCREW_4-SCREW,600V,35.4*31mm,BLACK,B_Type	1	1
10	DB65-00304A	TERMINAL BLOCK	11R FJM2,P.B.T + G30,4-TAB_4-SCREW,600V,47*47mm,BLACK,B_Type	1	1
11	DB65-00061G	TERMINAL BLOCK	HB-P/J,PBT,2-TAB_2-SCREW,Max2.5MM^2,36.4*24.2MM,BLK,A_Type	1	1
12	DB93-10988B	ASSY CONNECTOR WIRE	FJM2 PF3 MODEL,SSEC	1	1
13	DB93-09495D	ASSY CONNECTOR WIRE	FJM2 PF3 MODEL,SSEC	1	1
14	DB93-11420B	ASSY CONNECTOR WIRE-(SI 485 COMM)	FJM2 PF3 MODEL,SSEC	1	1
15	DB93-10987B	ASSY CONNECTOR WIRE	FJM2 PF3 MODEL,SSEC	1	1
16	DB93-09494C	ASSY CONNECTOR WIRE	FJM2 PF3 MODEL,SSEC	1	1
17	6002-000214	SCREW-TAPPING	TH,+,-,1,M4.0,L16,ZPC(BLK),SWRCH18A,-	5	5
18	6002-000536	SCREW-TAPPING	PH,+,NO,2S,M4,L8,ZPC(WHT),STS304,-	1	1
19	6009-001001	SCREW-SPECIAL	TH,+,WT,M4,L10,ZPC(WHT),SWRCH18A	7	7
20	6002-000630	SCREW-TAPPING	PH,+,-,2S,M3,L8,ZPC(WHT),SWRCH18A,-	3	3
21	DB91-00309A	ASSY-SCREW TAPPING	WW-INV,M3*25,PH,+,ZPC(YEL)	4	4
22	DB98-32914A	ASSY-LABEL CAUTION	hp,INV,INV,LABEL CAUTION	1	1
23	DB98-32914C	ASSY-LABEL CAUTION	hp,inv	1	1
24	DB98-32914E	ASSY-LABEL CAUTION	hp,inv	1	1
25	DB91-00306A	ASSY-SCREW MACHINE	BLDC INV. CONTROLLER,M3*16,WSP,PH,+,ZPC	4	4
26	DB98-24813A	ASSY-THERMAL GREASE	INV,radiant heat	2	2
27	DB93-10821B	ASSY CONNECTOR WIRE-4WAY CONNCET	PF3,UL1015,AWG18, SKYBLU	1	1
28	DB93-11288A	ASSY CONNECTOR WIRE-SUB CT	FJM2 6K,SSEC	1	1
29	DB93-11289A	ASSY CONNECTOR WIRE-MAIN TO SUB	FJM2 6K,SSEC	1	1
30	DB93-11280A	ASSY CONNECTOR WIRE-TERMINAL BLOCK	FJM2,UL1007	2	2
31	DB93-11280B	ASSY CONNECTOR WIRE-TERMINAL BLOCK	UL1007,BROWN	2	2
32	DB93-11280C	ASSY CONNECTOR WIRE-TERMINAL BLOCK	UL1007,RED	3	3
33	DB93-11280D	ASSY CONNECTOR WIRE	UL1007,BLUE	3	3
34	DB61-04708A	CASE-HUB PBA	ABS+PC	1	1
35	DB93-11293A	ASSY PCB MAIN-HUB	FJM2 6K,SSEC,N	1	1
36	DB95-01040P	ASSY-NOISE ABSORBER	FJM2 PF3 MODEL,SSEC	1	1
37	DB65-10088D	CABLE-TIE	NYLON,T1.2,WHITE,L100MM	1	1

6. PCB Diagram

6-1. INDOOR PCB Diagram

■ MH✳✳✳FNEA (MAIN PCB)

⚠ The red number connecter is not used.

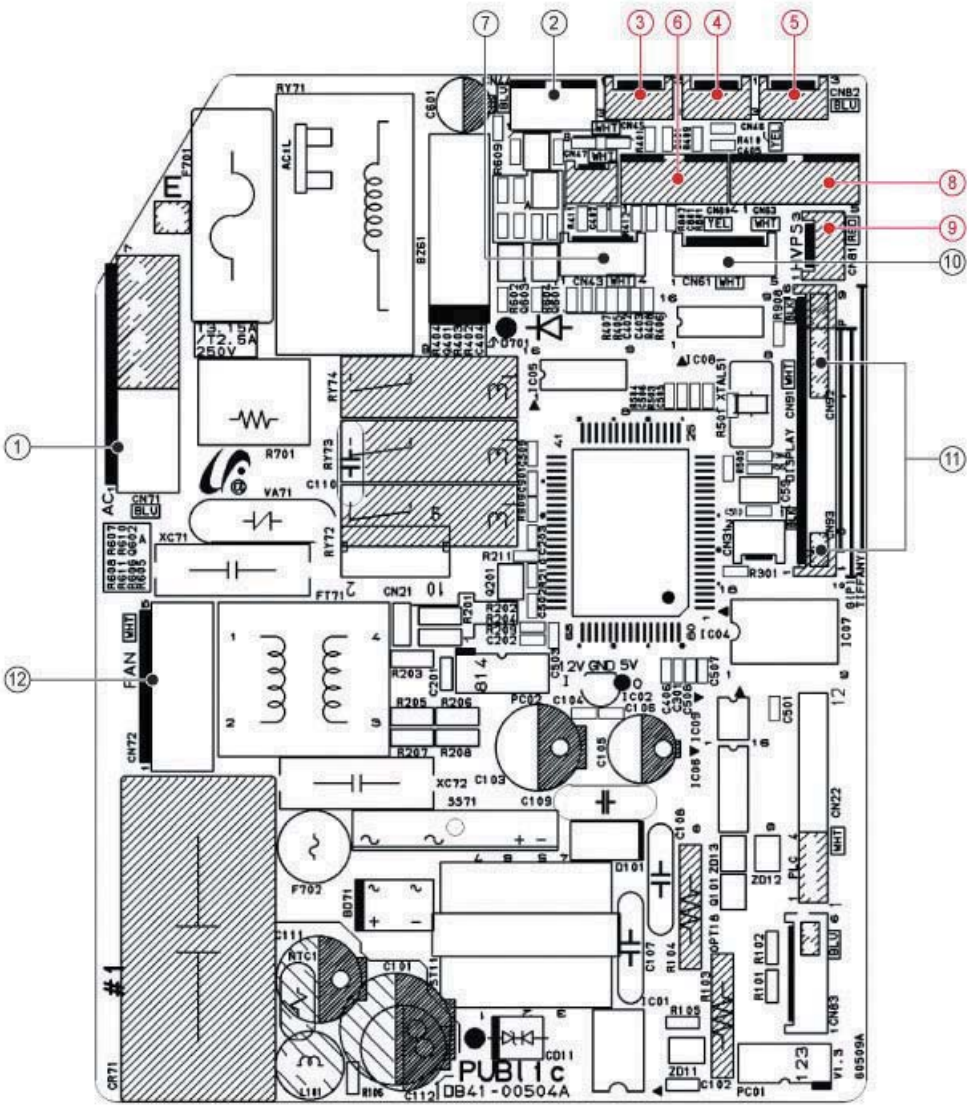

1	Power	7	Temperature Sensor
2	Motor RPM Feedback	8	Auto Grill
3	Remocon Module	9	HVPS(High voltage Generator)
4	Humidity Sensor	10	BLADE-H Step Motor
5	Anions	11	Display
6	MPI	12	Indoor Fan Motor

■ MH✳✳✳FBEA(MAIN PCB)

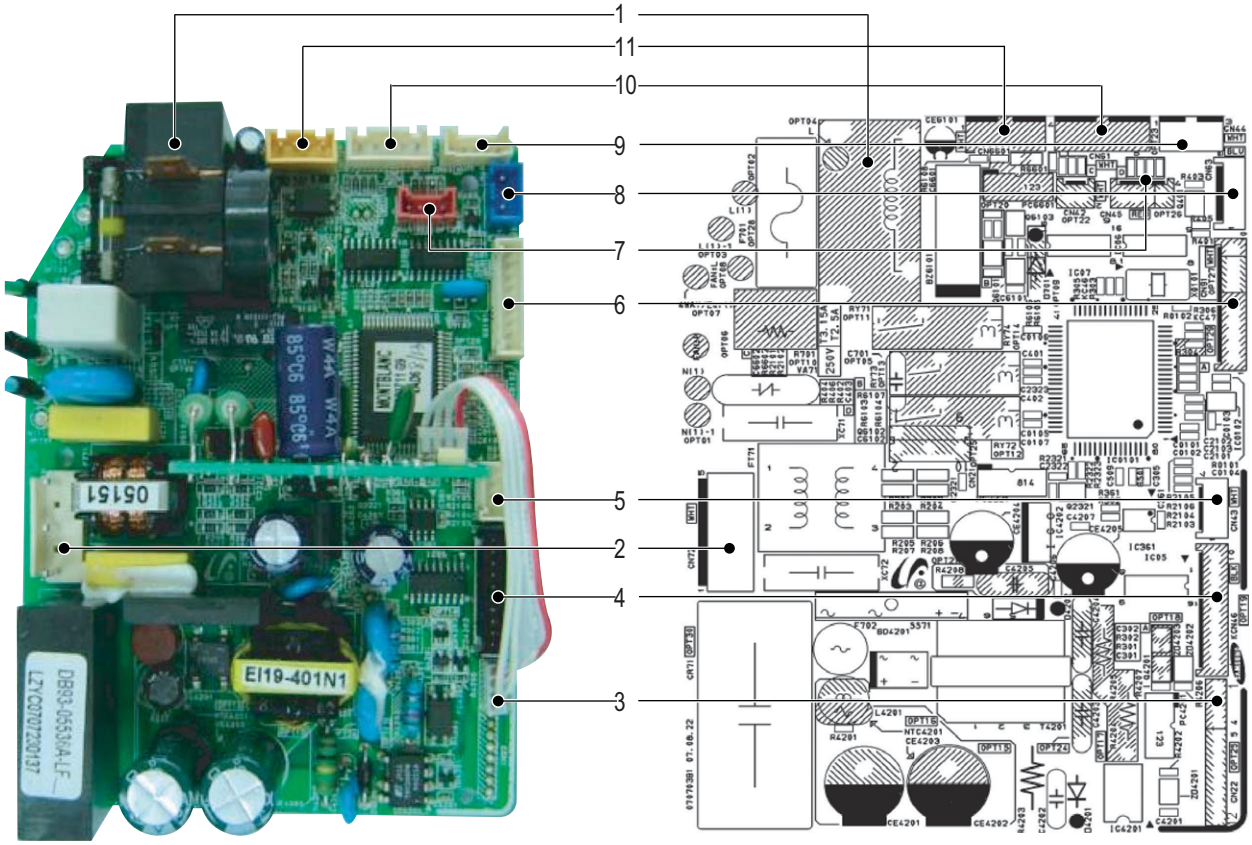

1 **RY71(L -terminal) Power Input**	2 **CN72-FAN MOTOR** #1: Capacitor #3:AC #5:Power	3 **CN22-COMMUNICATION** #1:DC5V #2:TxD #3:RxD #4:GND	4 **KCN46-DOWNLOAD** #1:RxD, #2:TxD #3:GND, #4:GND #5:Null, #6:Flash Mode2 #7:Flash Mode1 #8:Flash Mode0 #9:GND, #10:DC5V
5 **CN43-TEMPERATURE SENSOR** #1:Room temperature sensing #2:GND #3:Pipe temperature sensing #4:GND	6 **CN91-DISPLAY** #1:STB signal #2:CLK signal #3:LED driving signal #4:LED driving signal #5:DC5V #6:Null #7:Remocon signal input #8:DC12V #9:MPI Lamp driving signal	7 **CN45-KEY/REMOCON** #1:GND #2:DV5C #3:Remocon signal input #4:Switch key signal input	8 **CN44-FAN MOTOR FEED BACK** #1:DC5V #2:GND #3:Feedback signal input
9 **CN63-BLADE MOTOR** #1:DC12V #2:Motor driving signal output_1 #3:Motor driving signal output_2 #4:Motor driving signal output_3 #5:Motor driving signal output_4	10 **CN61-GRILL MOTOR** #1:DC12V #2:Motor driving signal output_1 #3:Motor driving signal output_2 #4:Motor driving signal output_3 #5:Motor driving signal output_4	11 **CN6601-MPI FEEDBACK** #1:MPI driving signal output (-) #2:MPI driving signal output (+) #3:DV12V #4:MPI feedback signal input	

■ MH✳✳✳FAEA(MAIN PCB)

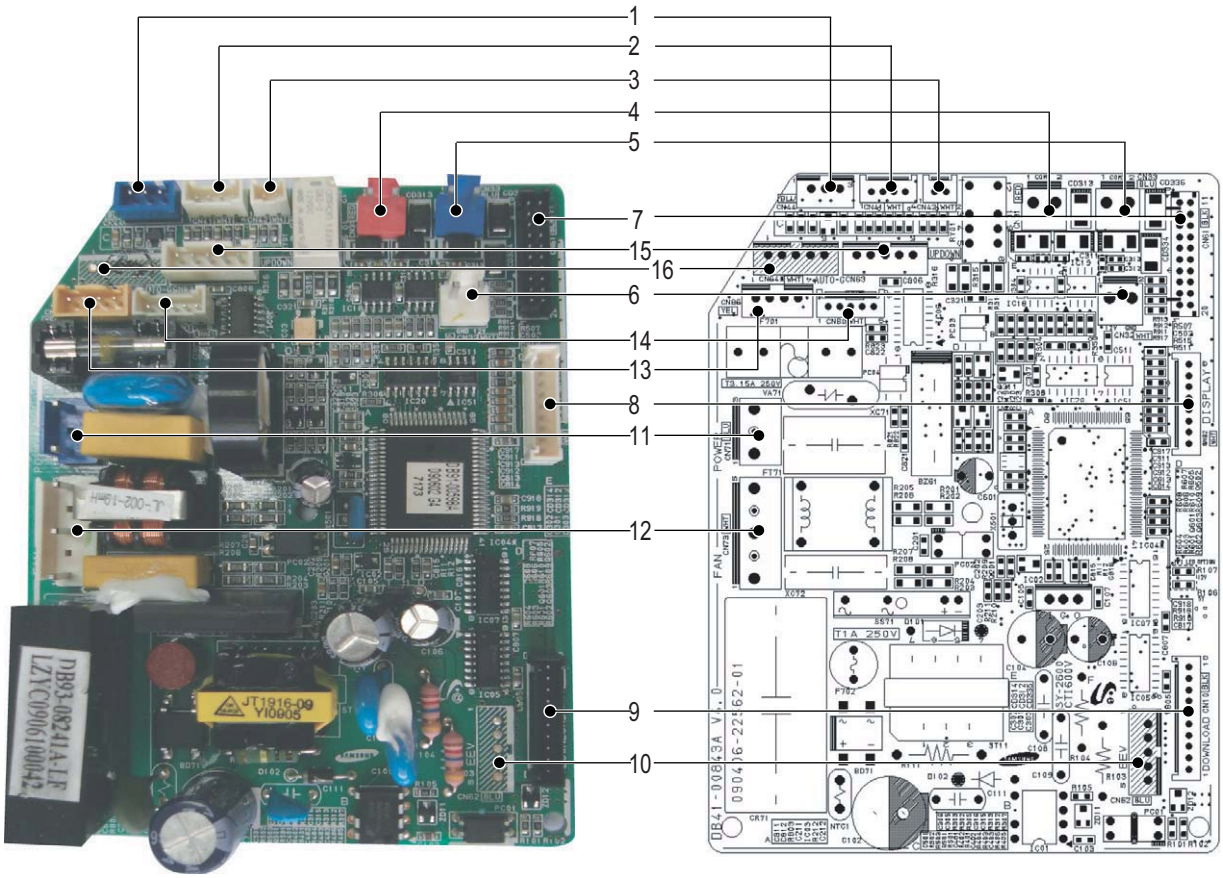

1 Motor RPM Feedback-CN44(BLU)	2 ROOM/EVA-IN-CN41(WHT)	3 EVA OUT - CN42(WHT)	4 COM1 - CN31(RED)
#1 : RPM(+) #2 : GND #3 : RPM(-)	#1 : ROOM #2 : GND #3 : EVA IN #4 : GND	#1 : EVA OUT #2 : GND	#1 : COM1 A #2 : COM1 B
5 COM2 - CN32(BLU)	**6 12V POWEWR - CN33(WHT)**	**7 SUB PCB COnnection-CN61(BLK)**	**8 Display PCB Connection-CN92(WHT)**
#1 : COM2 C #2 : COM2 D	#1 : 12V #2 : GND	#1~4 : DATA4~DATA7 #5~10 : GIRD0~GIRD5 #11~14 : GND #15 : EXT CTRL #16 : COMP CHK #17,#19 : 12V #18 : ERROR CHK #20 : GRID6	#1 : DATA IN/OUT #2 : LED CLK #3 : LED STB #4 : LED IRQ #5 : GND #6 : VCC #7 : 12V #8 : MPI LED
9 Download Connector-CN10(WHT)	**10 EEV-CN62(BLU)**	**11 INDOOR FAN Motor-CN73(WHT)**	**12 Power-CN71(WHT)**
#1 : COM1 RXD #2 : COM1 TXD #3 : GRID0 #4 : GRID1 #6 : MD2 #7,#10 : VCC #8 : MD1 #9 : GND	#1 : EEV A+ #2 : EEV B+ #3 : EEV A- #4 : EEV B- #6 : 12V	#1 : N (CAP) #2 : L (SSR) #3 : N	#1 : L #2 : #3 : N
13 MPI-CN86(WHT)	**14 Louver Step Motor-CN60(WHT)**	**15 Auto Grille step Motor1-CN63(WHT)**	**16 Auto Grille step Motor2-CN64(WHT)**
#1 : MPI(-) #2 : MPI(+) #3 : 12V #4 : MPI Feedback	#1 : 12V #2 : GRID A+ #3 : GRID B+ #4 : GRID A- #5 : GRID B-	#1 : 12V #2 : GRID A+ #3 : GRID B+ #4 : GRID A- #5 : GRID B-	#1 : 12V #2 : GRID A+ #3 : GRID B+ #4 : GRID A- #5 : GRID B-

■ MH✳✳✳FVEA (MAIN PCB)

⚠ The red number connecter is not used.

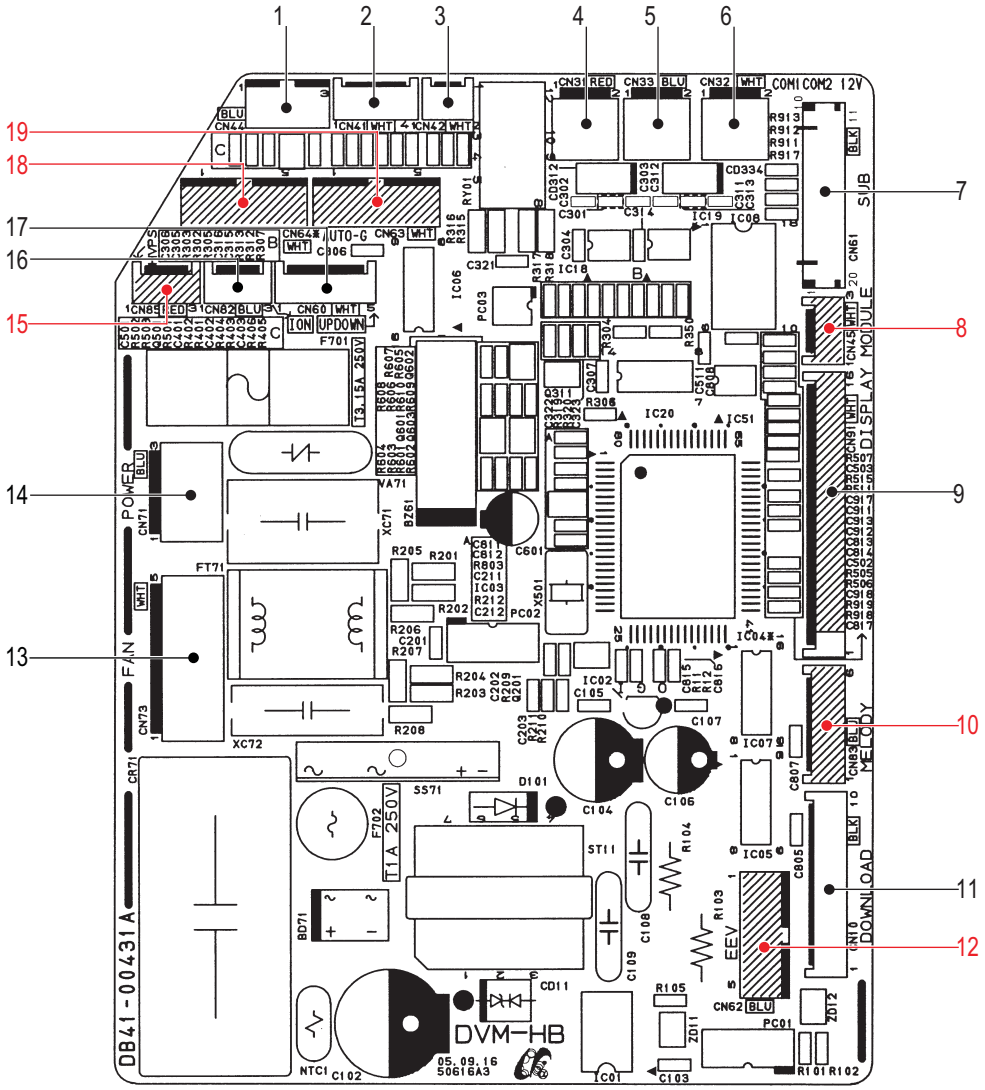

1	Motor Rpm FeedBack	10	Melody
2	ROOM/EVA IN	11	Download Connector
3	EVE OUT	12	EEV
4	COM1	13	Indoor Fan Motor
5	COM2	14	POWER
6	12V	15	MPI
7	SUB PCB Connection	16	Blade Step Motor
8	Module PCB Connection	17	Auto Grille Step Motor 1
9	Display PCB Connection	18	Auto Grill Step Motor2

■ MH✳✳✳FNEA/MH✳✳✳FBEA/MH✳✳✳FVEA/MH✳✳FAEA/MH✳✳✳FJEA (SUB PCB)

⚠ The red number connecter is not used.

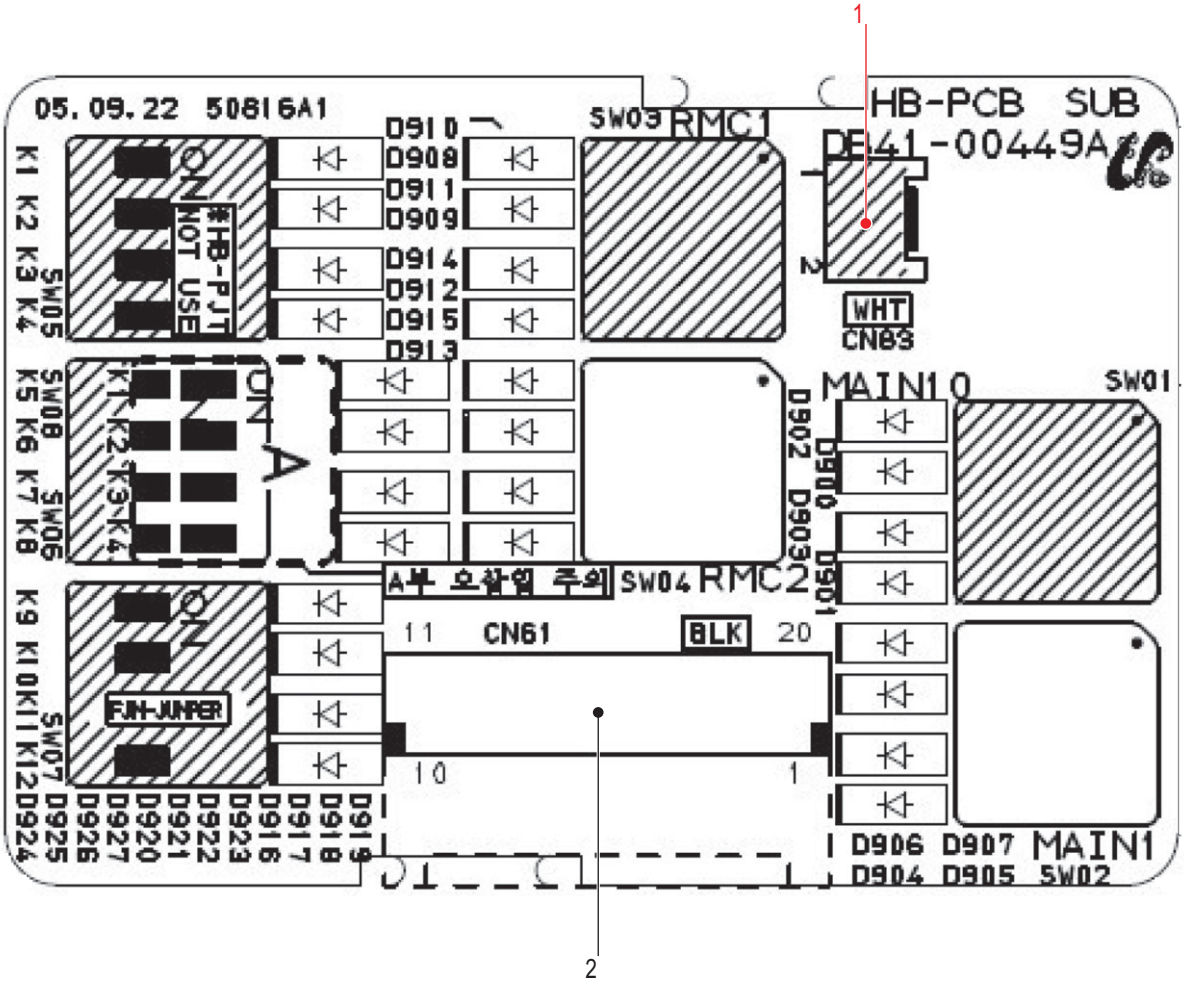

1	External Signal
2	MAIN PCB Connection

■ AQV**PSBN

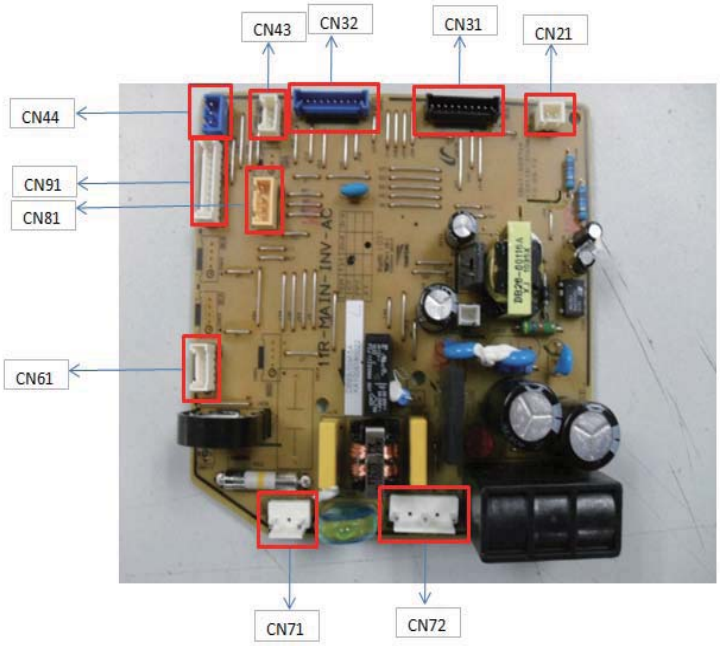

■ AQV**YWAN

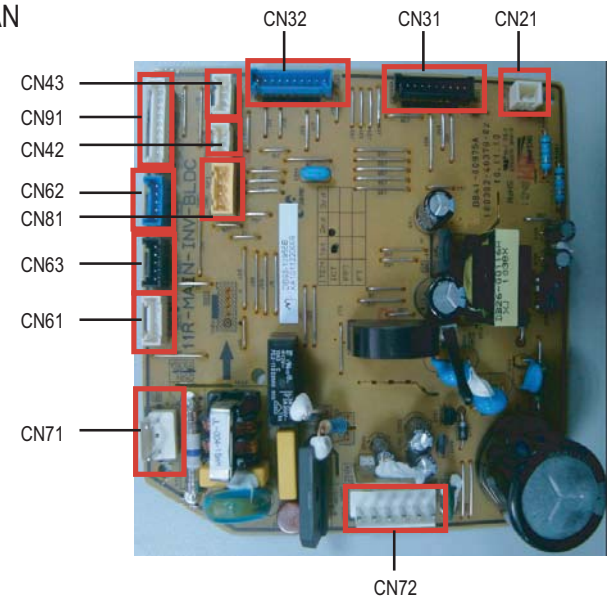

1	CN21	COMMUNICATION
2	CN31	DOWNLOAD
3	CN32	FJM
4	CN43	TEMPRATURE SENSOR
5	CN44	FAN MOTOR FEEDBACK
6	CN61	STEP MOTOR
7	CN71	POWER IN
8	CN72	FAN MOTOR
9	CN81	MPI /SPI
10	CN91	DISPLAY
11	CN62	STEP MOTOR(AUTO GRILL)
12	CN63	STEP MOTOR
13	CN42	HUM-SENSOR

■ MH✳✳✳FSEA

- MAIN PCB

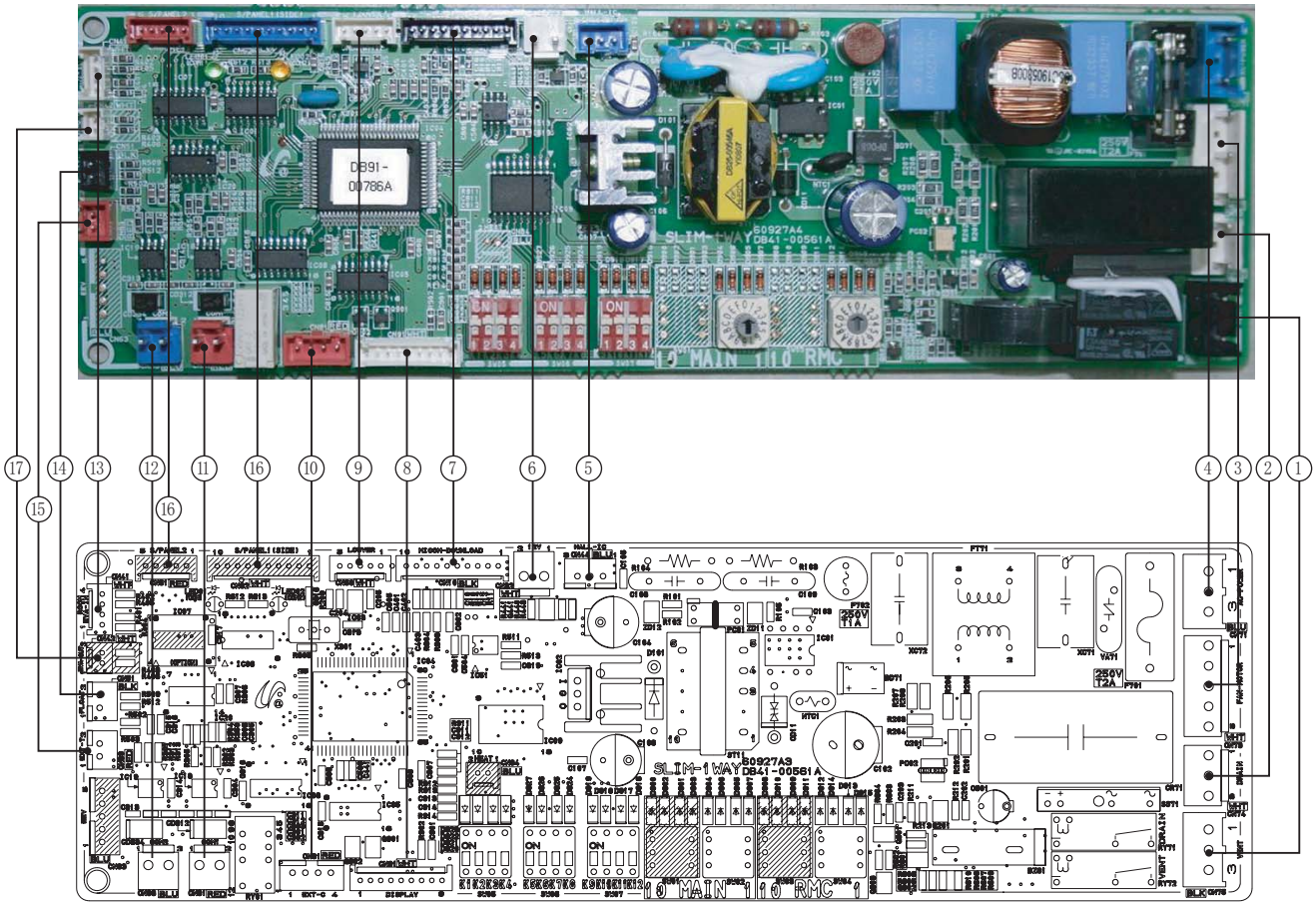

1 CN75-Ventilator	2 CN74-Drain Pump	3 CN73-Fan Motor #1:Input Operating Capacitor Motor #2, #4:Not used #3:Motor Control Signal #5:N phase Boltage	4 CN71-AC Power #1:L phase #2:N phase
5 CN44-RPM Feedback #1:5V input #2:GND #3:Hall IC output	6 CN32-Remocon DC12V #1:DC12V #2:GND	7 CN10-Micom Download	8 CN91-Display #1~#5:LED Control #6:AUTO_S/W #7:Remocon_Signal #8:GND #9:VCC
9 CN60-Louver #1:DC12V #2~#5: Louver control	10 CN81-External Control Out #1, #3:DC12V #2:Error CHK Out #4:Comp. CHK Out	11 CN31-Indoor/Outdoor Unit Communication #1:Comm. Signal F1 #2:Comm. Signal F2	12 CN33-Wred Remote Controller Communication #1:Comm. Signal F3 #2:Comm. Signal F4
13 CN41-Temp. sensor #1:ROOM Temp. Sensor #2:GND #3:EVA IN Temp. sensor #4:GND	14 CN51-FLOAT S/W #1:GND #2:Float S/W	15 CN83- External Control #1:On/off Contact point input #2:GND	16 CN61, CN62-Slide Panel #1,#6:DC12V #2~#5:Motor Control #7~#10:Not used
17 CN42-Temp. sensor #1:EVA OUT Temp. Sensor #2:GND			

■ MH✳✳✳FSEA (cont.)

- Panel

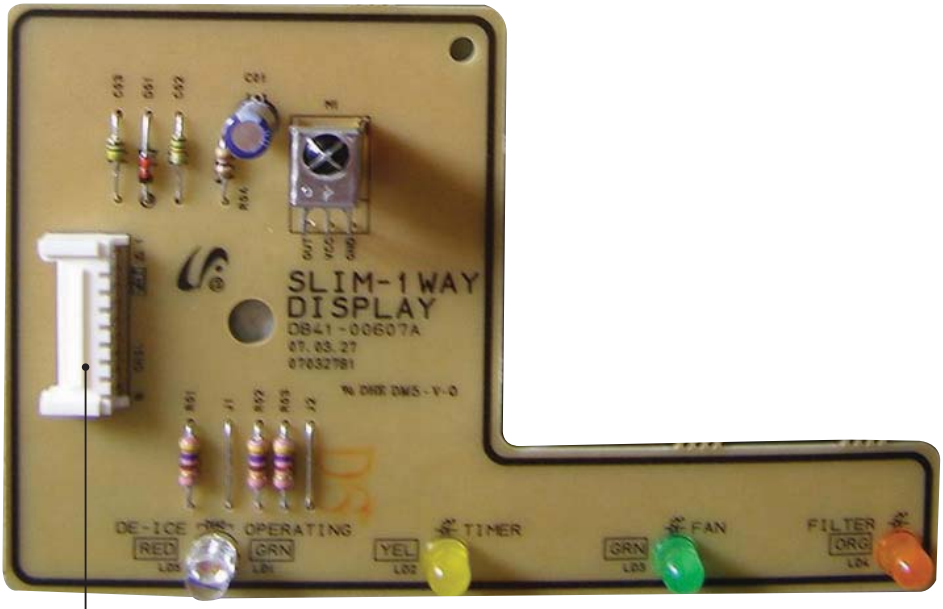

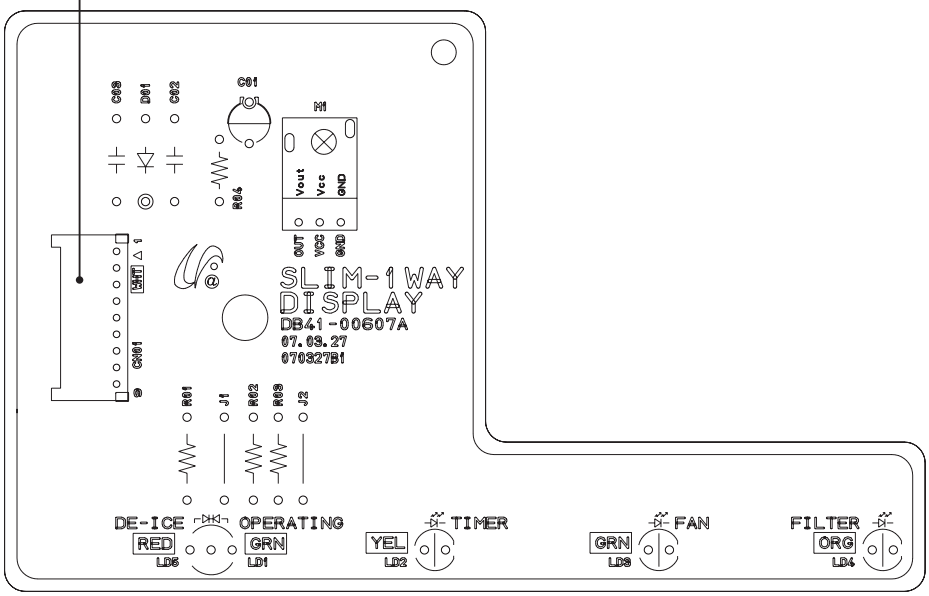

DC connection Connector	1 CN01 : Connect the Main PBA of the Indoor Unit #1~#5:Control Display LED #6:Not used #7:Receive signals from wireless remote controller #8:GND #9:VCC (DC5V)

■ MH ✳✳✳FMEA

⚠ The red number connecter is not used.

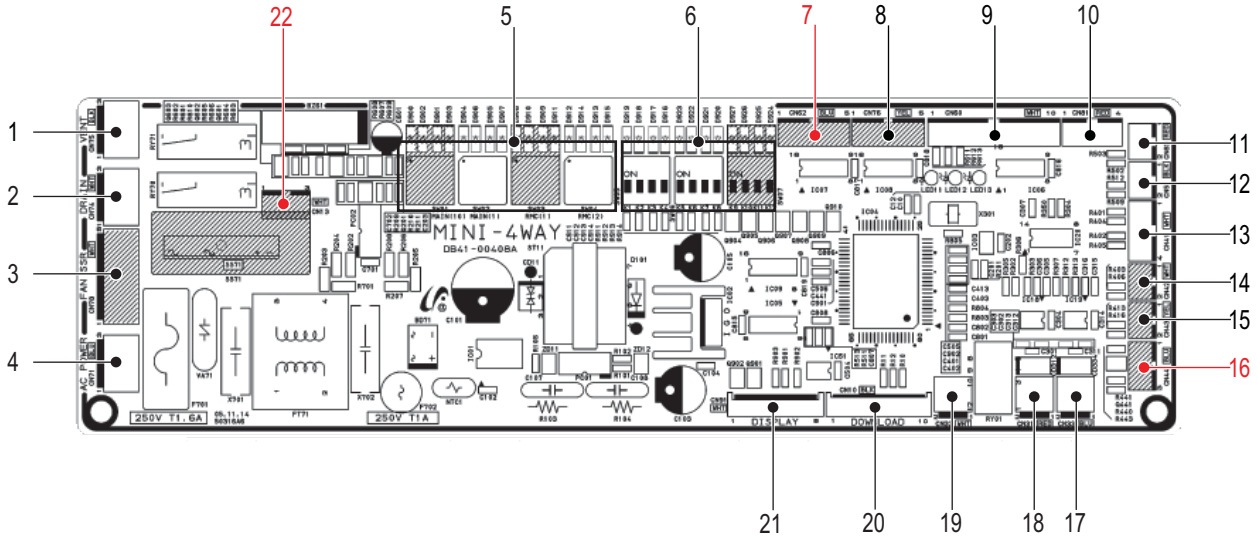

1	Ventilator : YW396-03AV(BLK)	12	Floating Switch : SMW250-02(BLK)
2	Drain Pump : YW396-03AV(WHT)	13	Room/Eva.-In Temp. Sensor : SMW250-04(WHT)
3	Indoor Fan(SSR Control) : YW396-05AV(WHT)	14	Eva.-Out Temp. Sensor : SMW250-02(WHT)
4	AC Power : YW396-03AV(BLU)	15	Heater Discharge Temp. Sensor : SMW250-02(YEL)
5	Indoor Address S/W(Main, RMC)	16	RPM Feedback : SMW250-03(BLU)
6	Option Switch	17	Communication2(Wired Remocon_F3/F4) : YW396-02V(BLU)
7	Electrical Expansion Valve(EEV) : B5B-XH-A(BLU)	18	Communication1(Outdoor_F1/F2) : YW396-02V(RED)
8	Load Control Signal	19	DC12V Out(Wired Remocon Power) : YW396-02V(WHT)
9	Panel Louver(Stepping Motor) : SMW250-10(WHT)	20	Micom Program Download : SMW200-10(BLK)
10	External Control Out(Error, Compressor State) : SMW250-04(RED)	21	Display PCB : SMW200-9(WHT)
11	External Control In(On/Off Control Signal) : SMW250-02(RED)	22	SSR Fan Control : SMW250-03(WHT)

■ MH✳✳✳FJEA

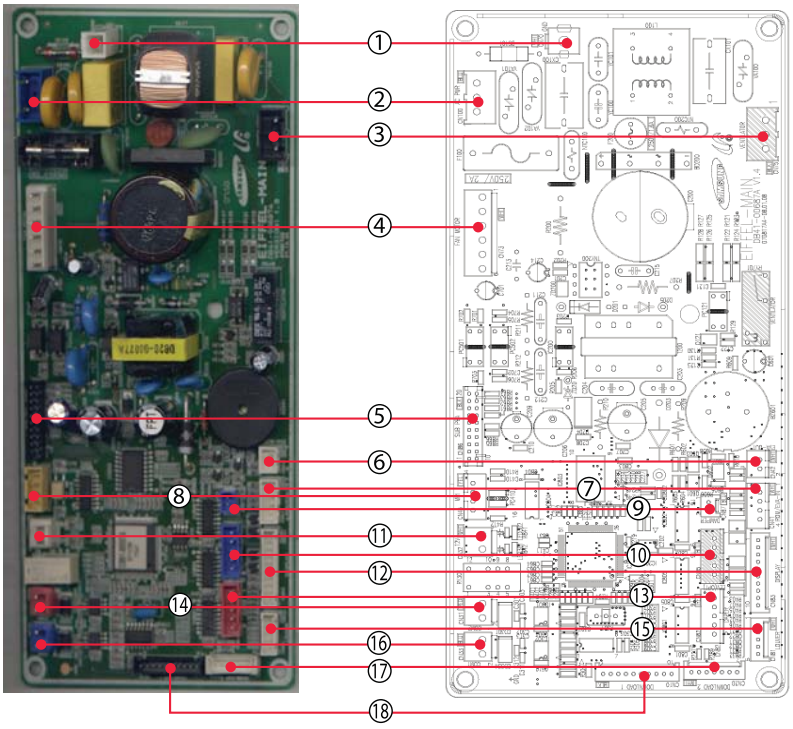

No.	CAC	FJM
1	○	○
2	○	○
3	○	○
4	○	○
5	○	○
6	×	○
7	○	○
8	○	○
9	○	○
10	×	×
11	○	○
12	○	○
13	○	○
14	○	○
15	○	○
16	○	○
17	○	○
18	○	○

AC Power or Motor Power Connector	1 CN70-GND	2 CN100-AC Power Input	3 CN75-VENTILATOR Output	4 CN73-Fan Motor Output(BLDC) #1. DC300V #2. No use #3. DGND #4. DC15V #5. PC501 Output #6. RPM Output
DC connection Connector	5 CN86-SUB PBA #1~#10 Address/Option S/W Control #11~#14. GND #15. External Control On/Off #17, #19. DC12V	6 CN42-EVA OUT #1. GND #2. EVA OUT Temp Sensor	7 CN41-Indoor Temp Sensor #1. ROOM Temp Sensor #2. GND #3. EVA-IN Temp Sensor #4. GND	8 CN45-MPI #1. MPI(-) ON/OFF Control(DC12V) #2. MPI(+) ON/OFF Control(DC12V) #3. DC12V #4. MPI Feedback
	9 CN87-DAMPER S/W #1. DC 5V #2. GND	10 CN84-Electric Expansion Valve(EEV) #1~#4. Control Signal #5. DC12V	11 CN32-DC 12V Output #1. DC12V #2. GND	12 CN83-PANEL DISPLAY #1, #2, #3, #4, #5> DISPLAY LED #6. TOUCH S/W Reset(DC5V) #7. TOUCH S/W Out(DC5V) #8. REMOCON SIGNAL Receive #9. GND #10. VCC(DC5V)
	13 CN82-DAMPER MOTOR #1. DC 12V #2~#5. Control SIGNAL	14 CN31-COM1 Communication (Indoor-Outdoor ommunication) #1.Communication Signal F1 #2.Communication Signal F2	15 CN84-LOUVER MOTOR #1. DC 12V #2~#5.Communication Signal	16 CN33-COM2 Communication (Indoor-Wired Remote Controller) #1. Communication Signal F1 #2. Communication Signal F2
	17 CN20-MICOM Download2 > For Developer,Not for field > 7pin Downloader	18 CN10-MICOM Download1 >For Developer, Not for field >10pin Downloader		

■ NJ ✳✳✳LHXEA/MH✳✳✳FUEA

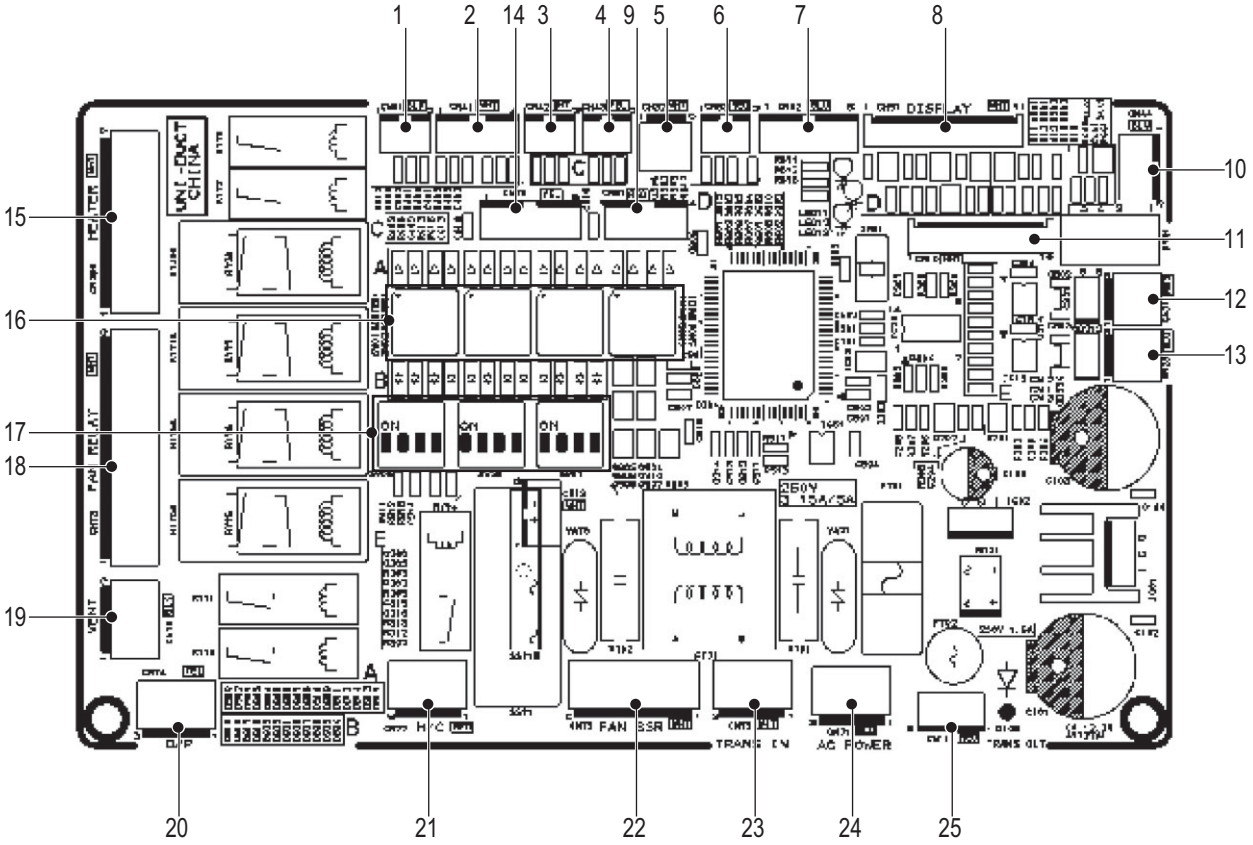

1	Float Switch	13	COM 2
2	Room Temperature	14	Load Control Signal
	EVA in Temperature	15	Heater
3	EVA out Temperature	16	Address Switch
4	Heater Temperature	17	Option Switch
5	Wired Remote Controller Power(12V)	18	Fan (Tap Control)
6	Control Signal	19	Ventilator
7	EEV	20	Drain Pump
8	Display	21	Hot Coil
9	Operating Check Signal	22	Fan (SSR)
10	HALL IC	23	Trans In
11	Download	24	Main Power
12	COM 1	25	Trans out

6-2. OUTDOOR PCB Diagram

■ RJ040F2HXEA/RJ050F2HXEA MAIN PCB

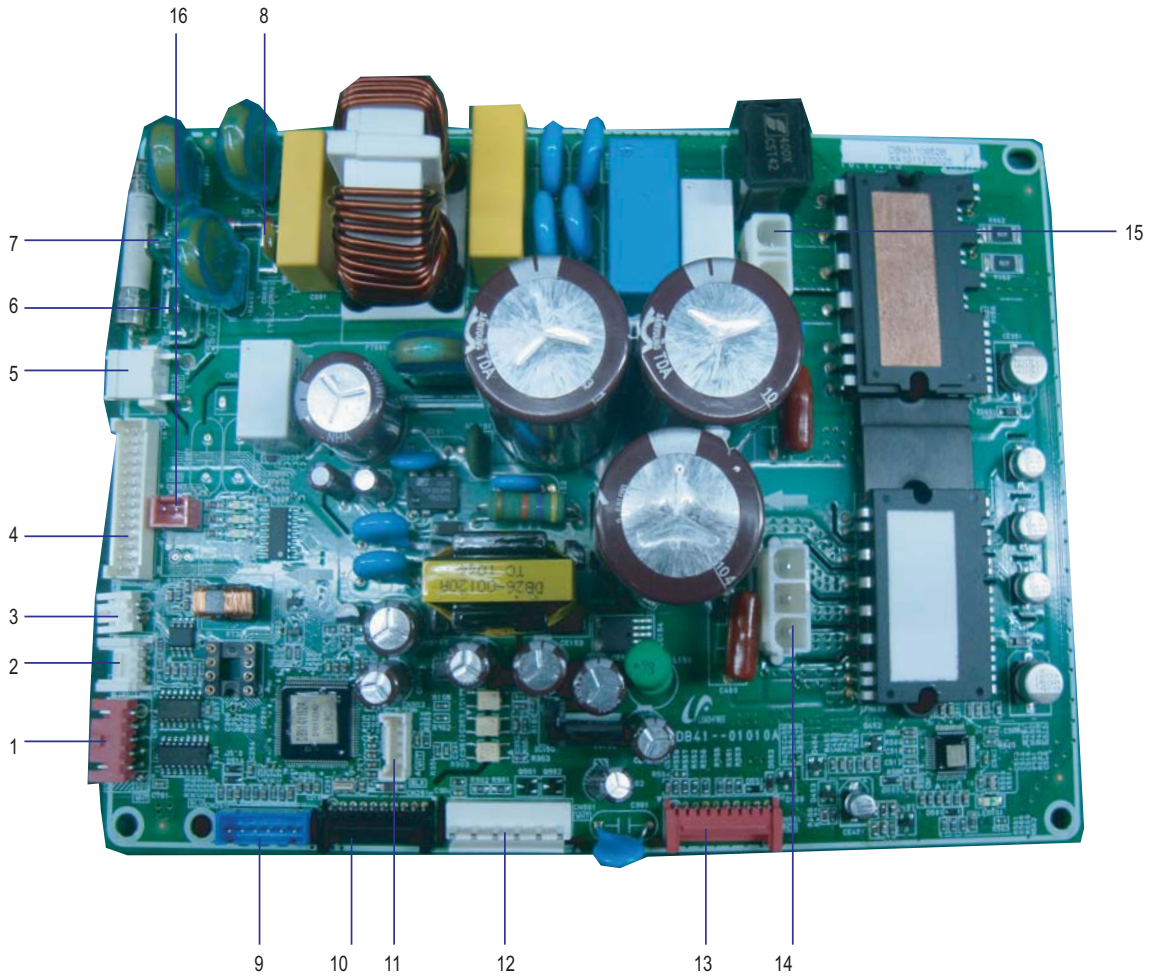

1	EEV-A CONNECTOR	SMAW250-05 RED
2	SNET CONNECTOR	SMAW200-04 NTR
3	OLP THERMISTOR	SMAW250-02 WHT
4	DISPLAY CONNECTOR	SMW200-28 WHT
5	4WAY CONNECTOR	YAW396-03AV WHT
6	TB-N CONNECTOR	YTR250
7	TB-L CONNECTOR	YTR250
8	EARTH CONNECTOR	YTR250
9	DISCHARGE/COND/OUT THERMISTOR CONNECTOR	SMW250-06 BLU
10	PC-DOWNLOAD CONNECTOR	SMAW200-10 BLK
11	CENTRAL CONTROL CONNECTOR	SMW200-05 NTR
12	BLDC FAN CONNECTOR	YW396-06V WHT
13	INVERTER DOWNLOAD CONNECTOR	SMAW200-10 RED
14	COMP CONNECTOR	DBT061-3P
15	REACTOR CONNECTOR	DBT081-2P
16	COMMUNICATOR CONNECTOR	SMW250-02 RED

■ RJ040F2HXEA/RJ050F2HXEA SUB PCB

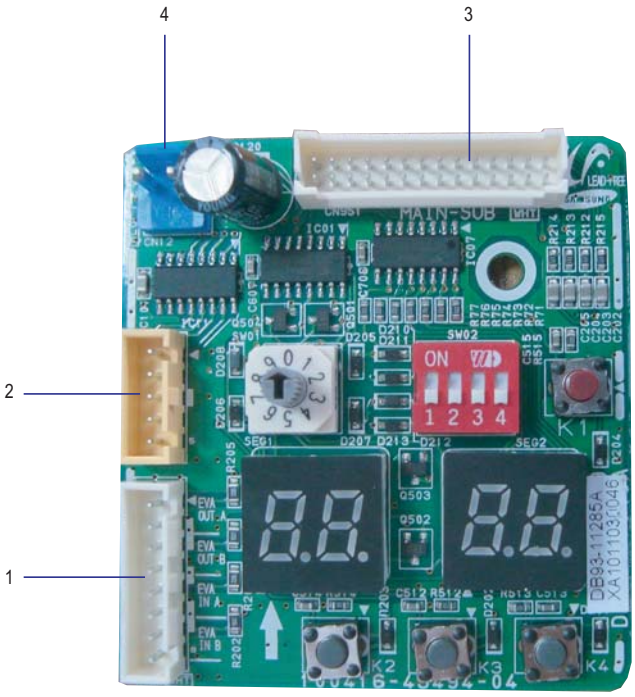

1	EVAP THERMISTOR CONNECTOR	SMW250-08 WHT
2	EEV-B CONNECTOR	SMW250-05 YEL
3	DISPLAY-MAIN CONNECTOR	SMW200-28 WHT
4	12V POWER CONNECTOR	YW396-02AV BLU

■ RJ060F3HXEA/RJ070F4HXEA/RJ080F4HXEA MAIN PCB

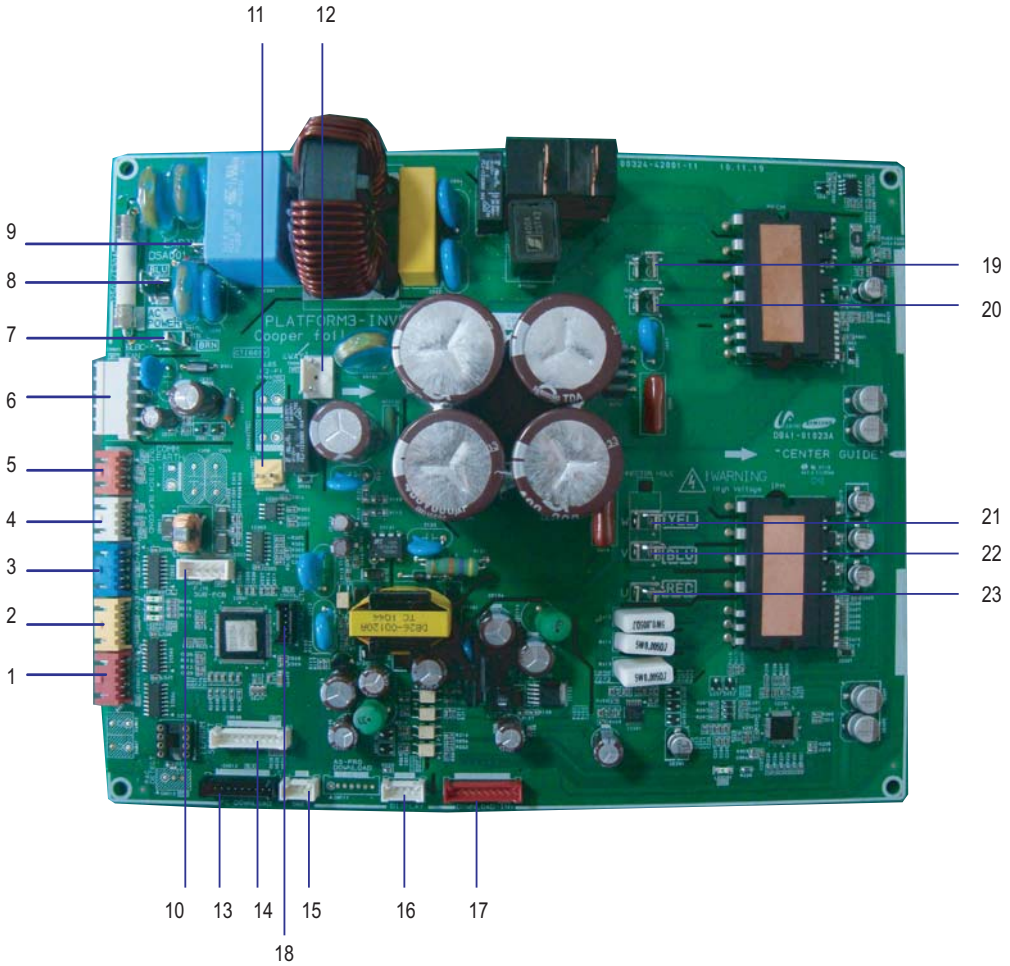

1	EEV-A CONNECTOR	SMAW250A-05 RED
2	EEV-B CONNECTOR	SMAW250A-05 YEL
3	EEV-C CONNECTOR	SMAW250A-05 BLU
4	OLP/COND THERMISTOR CONNECTOR	SMAW250A-04 WHT
5	OUT/DISCHARGE THERMISTOR CONNECTOR	SMAW250A-04 RED
6	BLDC-FAN CONNETCOR	YAN396-06V WHT
7	TB-L CONNECTOR	YTR250
8	TB-N CONNECTOR	YTR250
9	EARTH CONNECTOR	YTR250
10	DISPLAY CONNECTOR	SMW250-05 WHT
11	COMMUNICATION CONNECTOR	YW396-02U YEL
12	4WAY CONNECTOR	YW396-03AU WHT
13	PC DOWNLOAD CONNECTOR	SMW200-10 BLK
14	DISPLAY CONNECTOR	SMW200-10 NTR
15	SNET CONNECTOR	SMW200-04 NTR
16	DISPLAY CONNECTOR	SMW200-05 NTR
17	DOWNLOAD-INV CONNECTOR	SMW200-10 RED
18	CENTRAL-CONTROL CONNECTOR	SMW200-05 BLK
19	REACTOR-1 CONNECTOR	YTR250
20	REACTOR-2 CONNECTOR	YTR250
21	COMP-W CONNECTOR	YTR250
22	COMP-V CONNECTOR	YTR250
23	COMP-U CONNECTOR	YTR250

■ RJ060F3HXEA/RJ070F4HXEA/RJ080F4HXEA SUB PCB

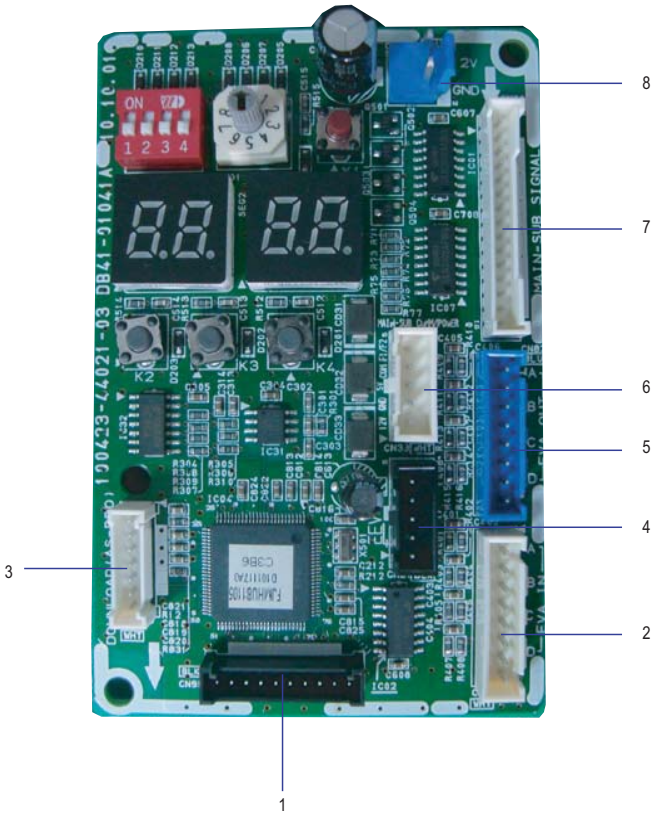

1	PC-DOWNLOAD CONNECTOR	SMW200-10 BLK
2	EVA IN THERMISTOR CONNECTOR	SMW250-08 WHT
3	AS-PRO DOWNLOAD CONNECTOR	SMW200-07 NTR
4	EEV-D CONNECTOR	SMW250-05 BLK
5	EVA OUT THERMISTOR CONNECTOR	SMW250-08 BLU
6	MAIN-SUB SIGNAL CONNECTOR	SMW250-05 WHT
7	MAIN-SUB SIGNAL CONNECTOR	SMW200-15NTR
8	12V POWER CONNECTOR	YW396-02V BLU

MEMO

7. Wiring Diagram

7-1. INDOOR UNIT

■ MH✳✳✳FNEA

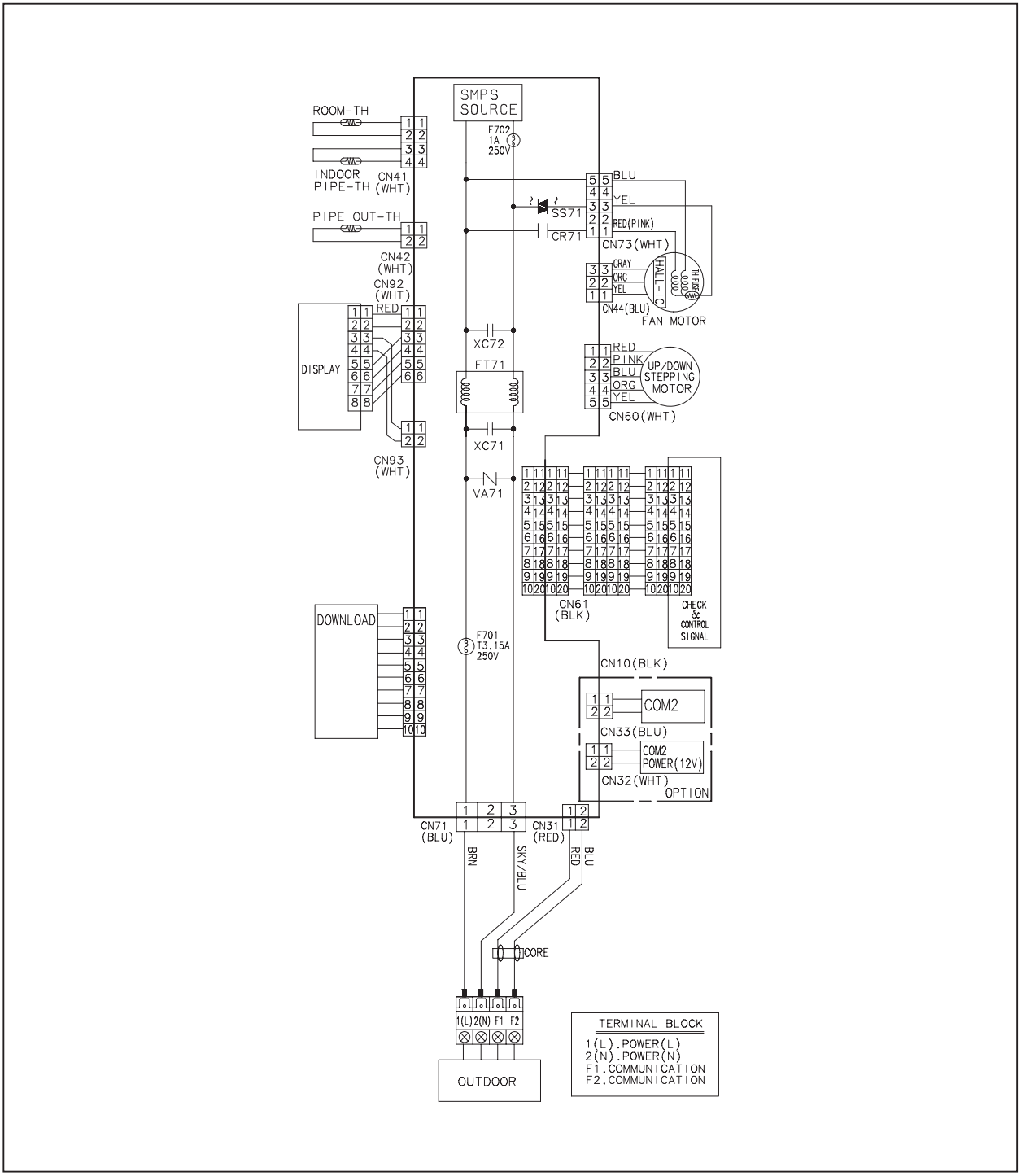

This Document can not be used without Samsung's authorization.

■ MH✳✳✳FBEA

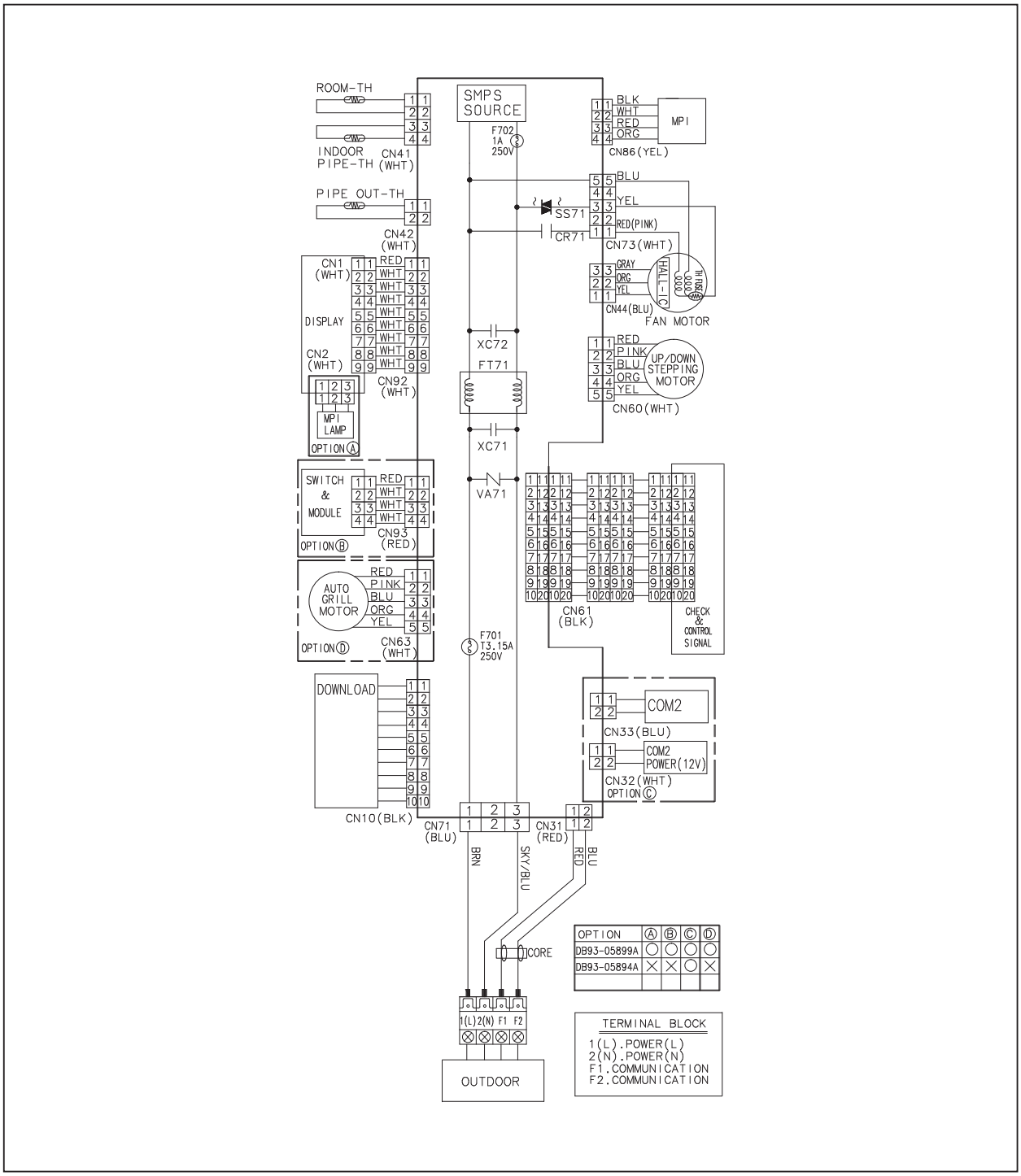

This Document can not be used without Samsung's authorization.

■ MH✳✳✳FVEA

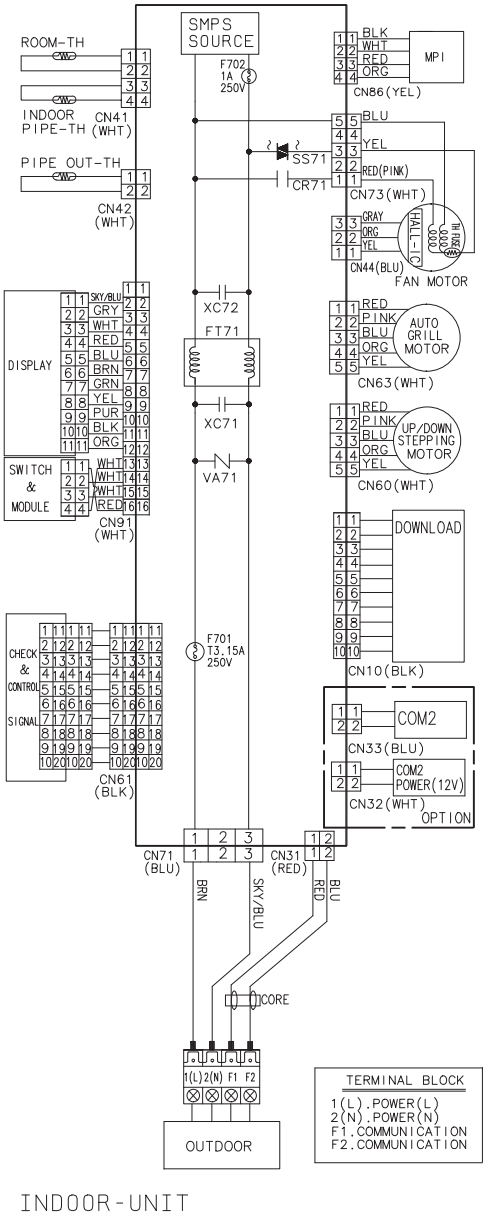

This Document can not be used without Samsung's authorization.

■ MH✳✳✳FAEA

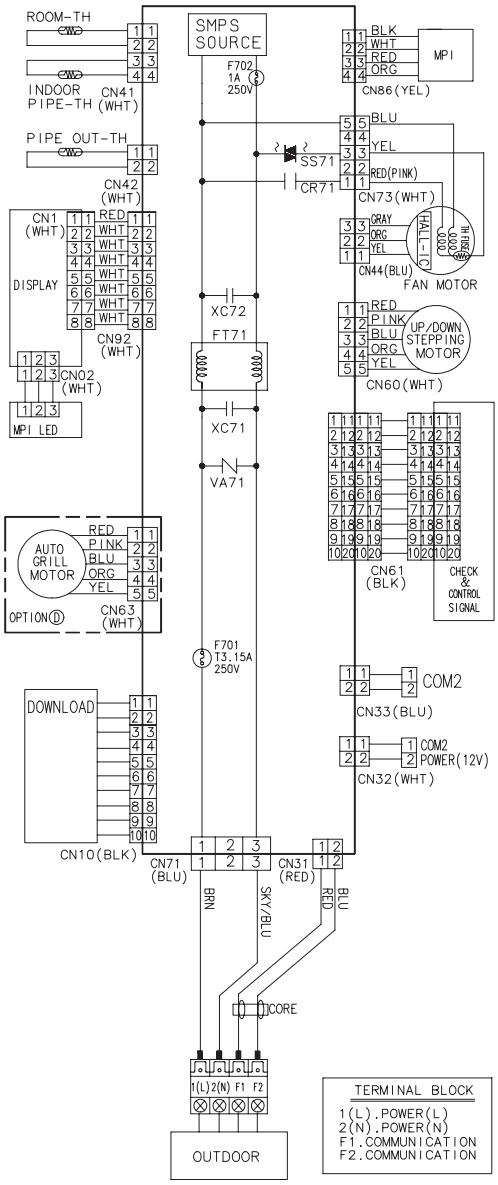

This Document can not be used without Samsung's authorization.

■ MH✳✳✳FSEA

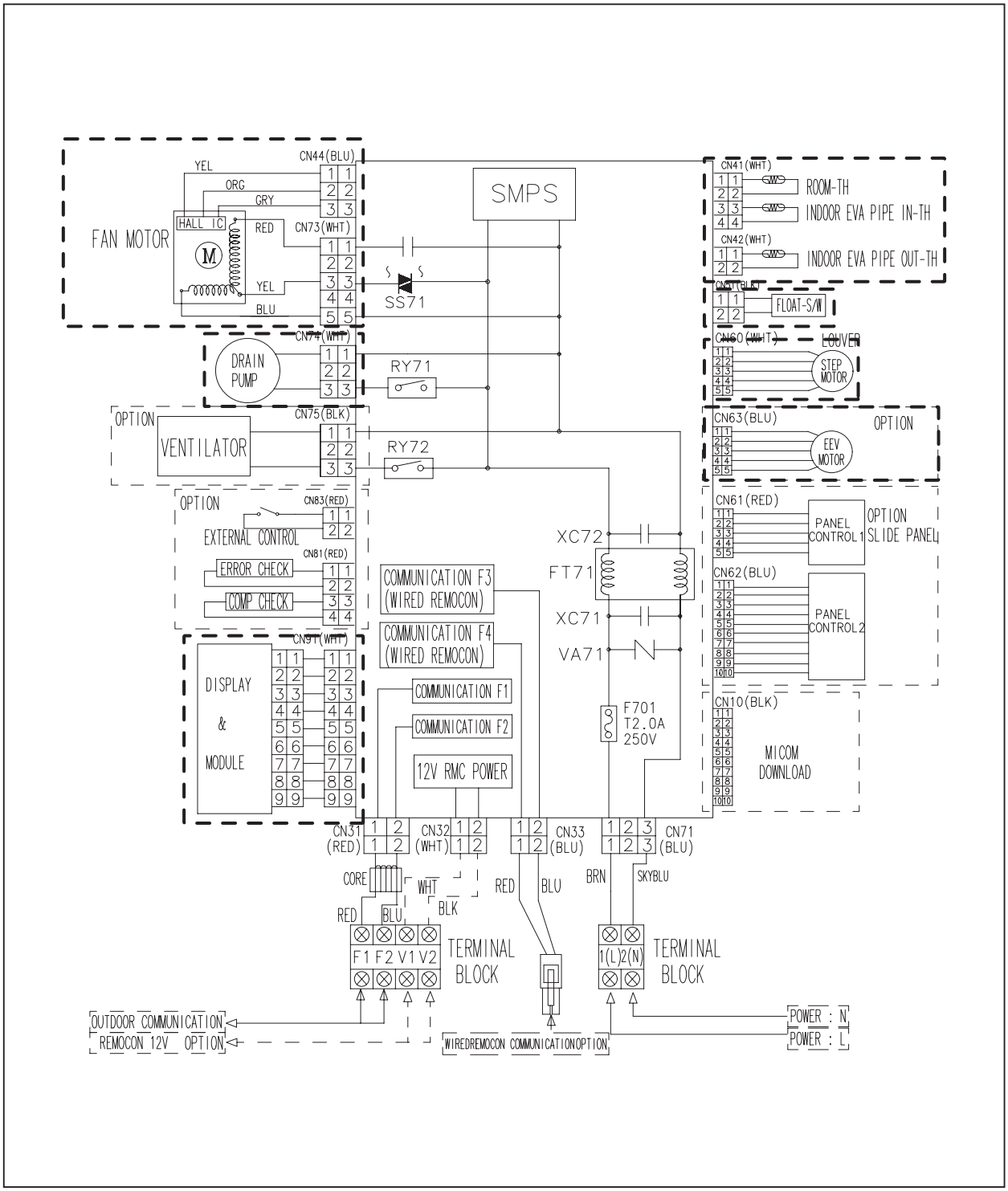

This Document can not be used without Samsung's authorization.

■ MH✳✳✳FMEA

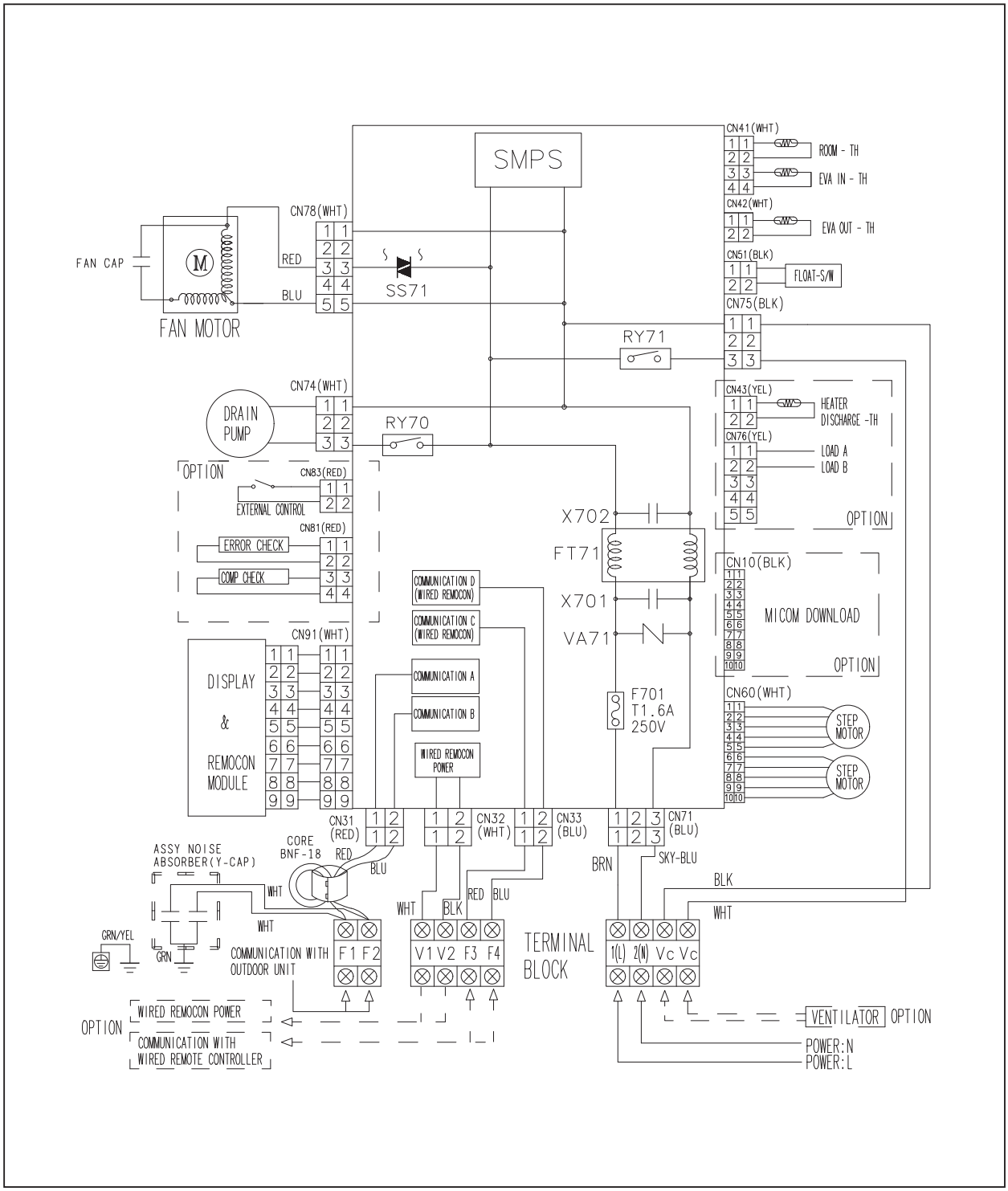

This Document can not be used without Samsung's authorization.

■ NJ026LHXEA/NJ035LHXEA

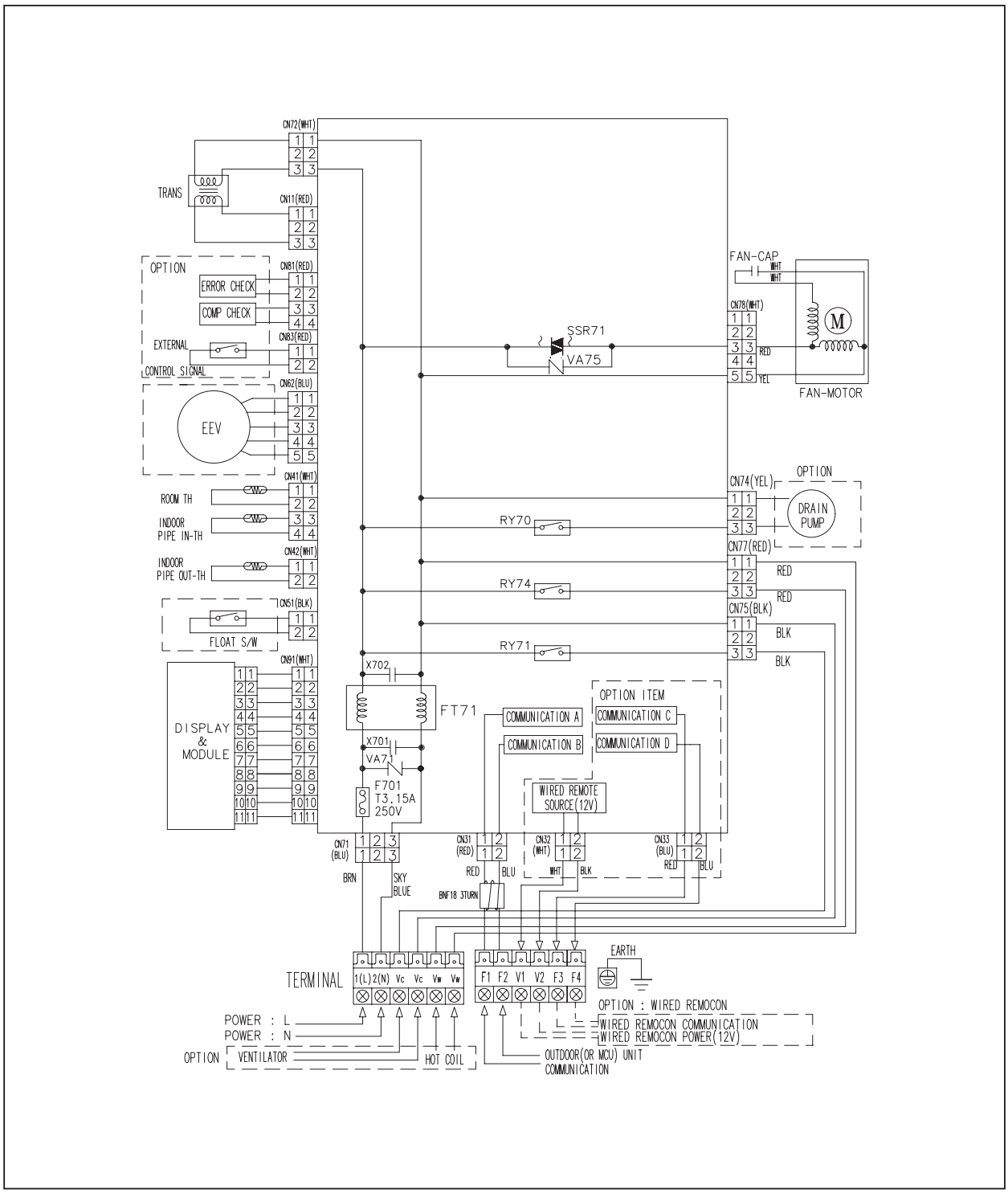

This Document can not be used without Samsung's authorization.

■ MH052FUEA

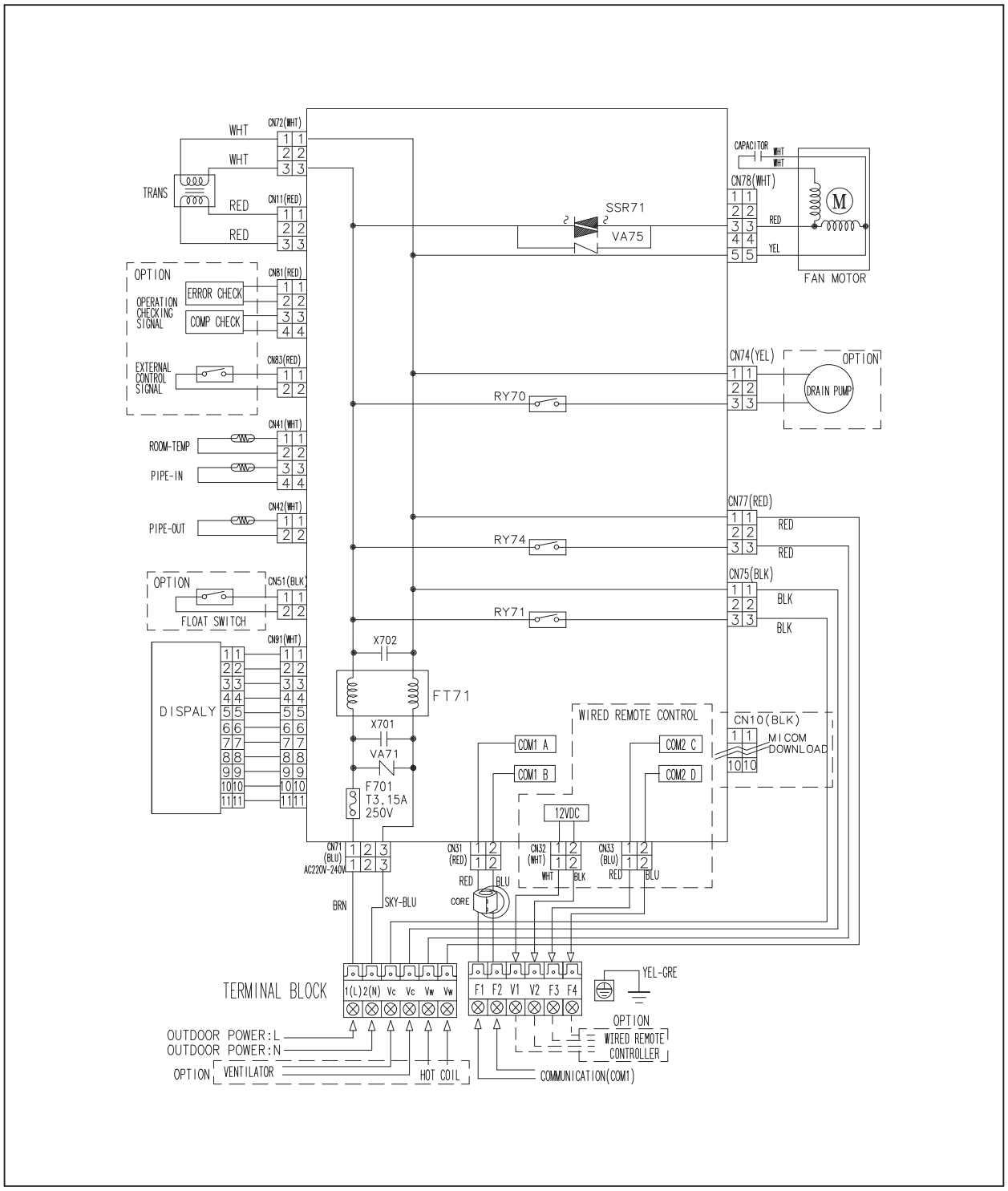

This Document can not be used without Samsung's authorization.

■ MH✳✳✳FJEA

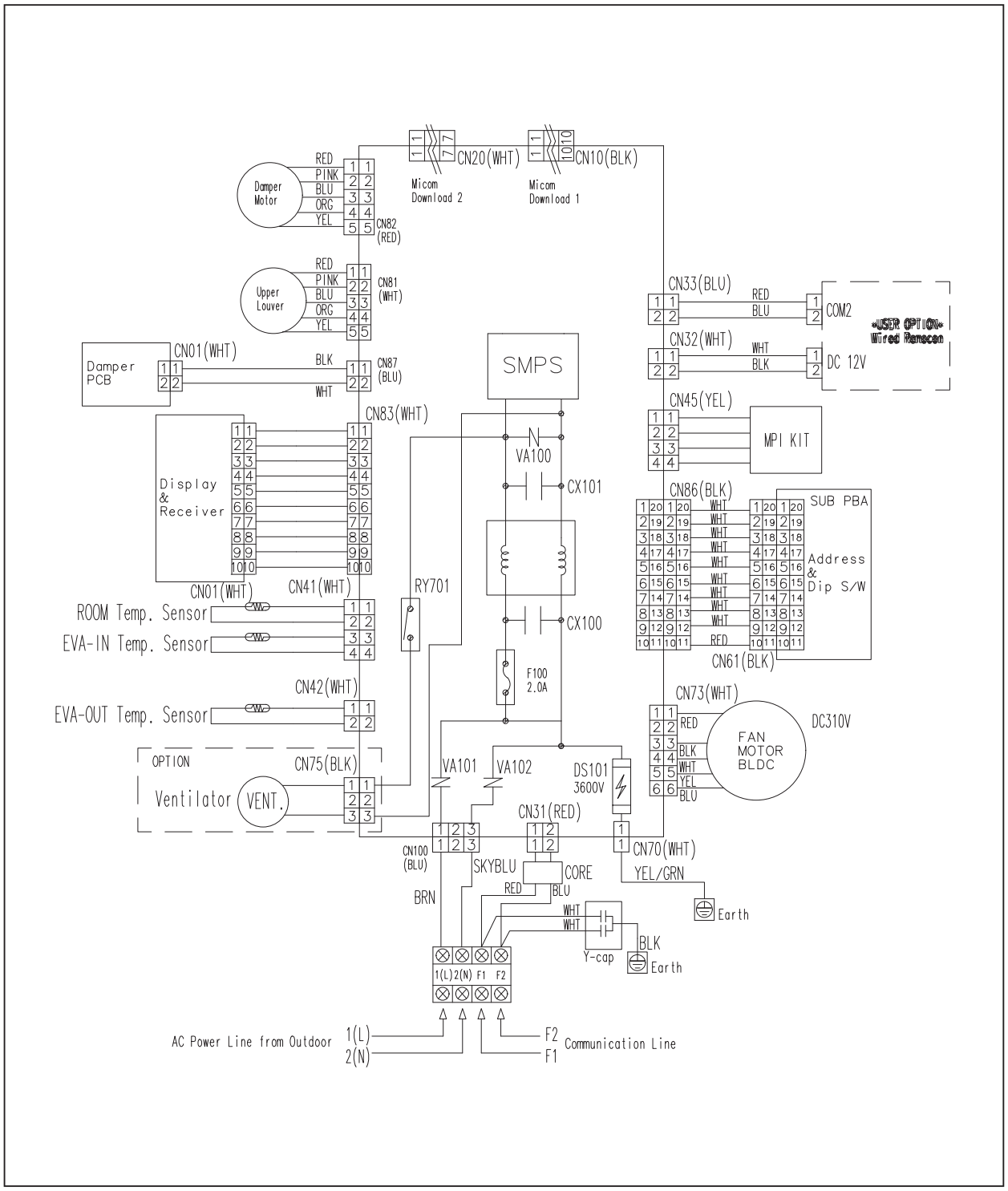

This Document can not be used without Samsung's authorization.

■ AQV✳✳✳PSBN

AQV07/09/12PSBN

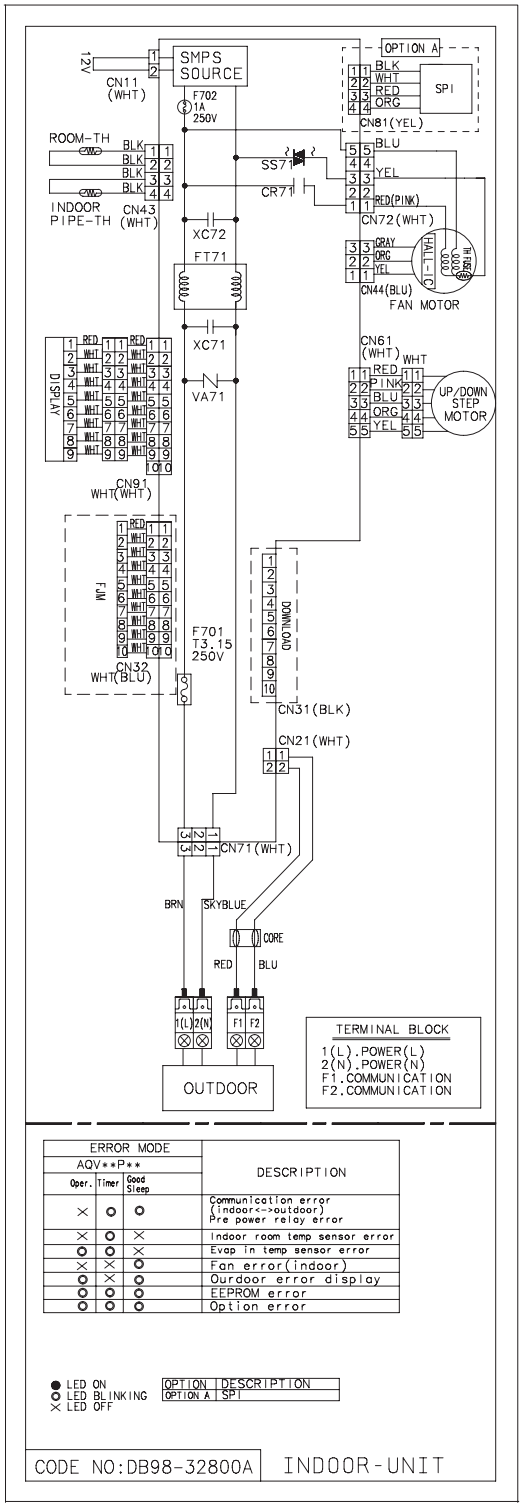

AQV18/24PSBN

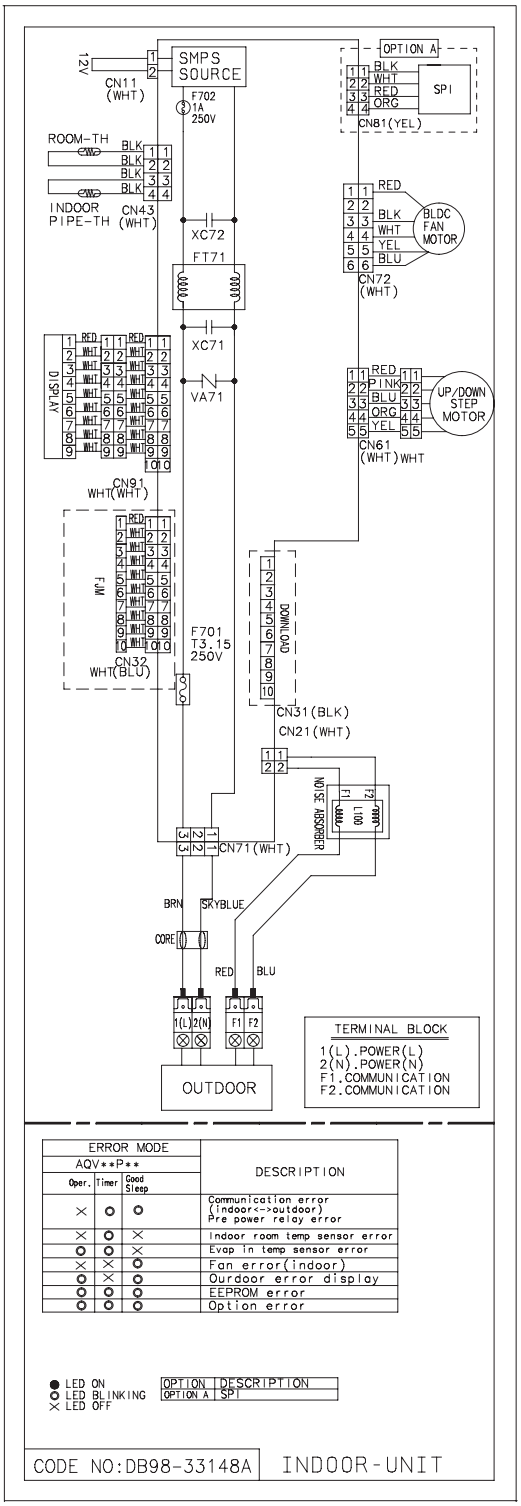

This Document can not be used without Samsung's authorization.

■ AQV✳✳✳YWAN

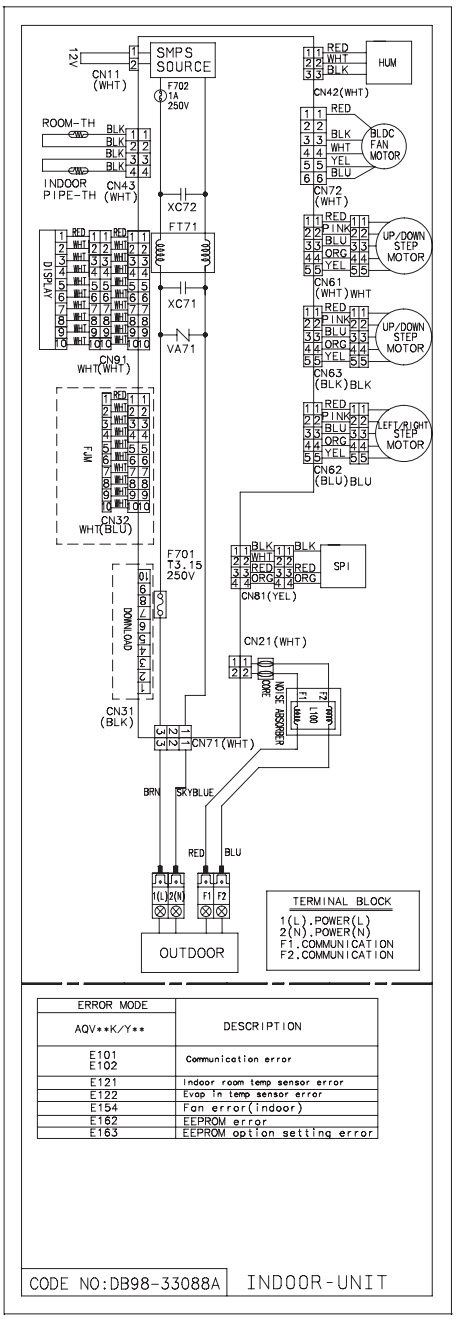

ERROR MODE AQV**K/Y**	DESCRIPTION
E101 E102	Communication error
E121	Indoor room temp sensor error
E122	Evap in temp sensor error
E154	Fan error(indoor)
E162	EEPROM error
E163	EEPROM option setting error

CODE NO:DB98-33088A INDOOR-UNIT

This Document can not be used without Samsung's authorization.

7-2. OUTDOOR UNIT

■ RJ040F2HXEA/RJ050F2HXEA

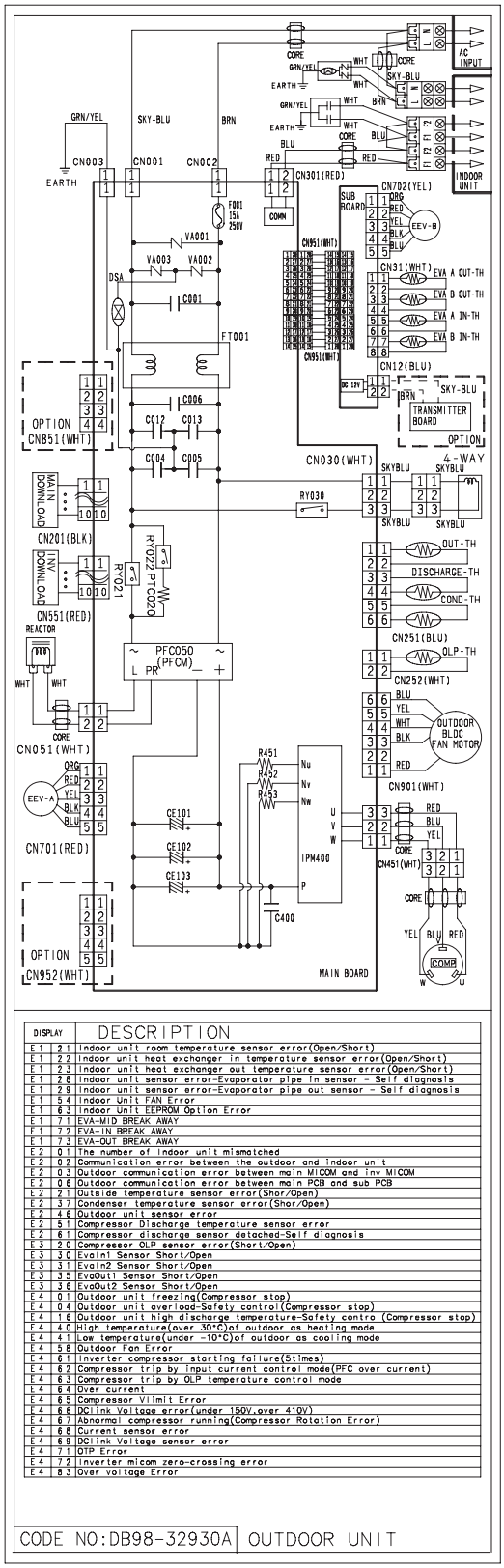

DISPLAY		DESCRIPTION
E 1	2 1	Indoor unit room temperature sensor error(Open/Short)
E 1	2 2	Indoor unit heat exchanger in temperature sensor error(Open/Short)
E 1	2 3	Indoor unit heat exchanger out temperature sensor error(Open/Short)
E 1	2 8	Indoor unit sensor error-Evaporator pipe in sensor - Self diagnosis
E 1	2 9	Indoor unit sensor error-Evaporator pipe out sensor - Self diagnosis
E 1	5 4	Indoor Unit FAN Error
E 1	6 3	Indoor Unit EEPROM Option Error
E 1	7 1	EVA-MID BREAK AWAY
E 1	7 2	EVA-IN BREAK AWAY
E 1	7 3	EVA-OUT BREAK AWAY
E 2	0 1	The number of indoor unit mismatched
E 2	0 2	Communication error between the outdoor and indoor unit
E 2	0 3	Outdoor communication error between main MICOM and inv MICOM
E 2	0 6	Outdoor communication error between main PCB and sub PCB
E 2	2 1	Outside temperature sensor error(Shor/Open)
E 2	3 7	Condenser temperature sensor error(Shor/Open)
E 2	4 6	Outdoor unit sensor error
E 2	5 1	Compressor Discharge temperature sensor error
E 2	6 1	Compressor discharge sensor detached-Self diagnosis
E 3	2 0	Compressor OLP sensor error(Short/Open)
E 3	3 0	Evaini Sensor Short/Open
E 3	3 1	Evain2 Sensor Short/Open
E 3	3 5	EvaOut1 Sensor Short/Open
E 3	3 6	EvaOut2 Sensor Short/Open
E 4	0 1	Outdoor unit freezing(Compressor stop)
E 4	0 4	Outdoor unit overload-Safety control(Compressor stop)
E 4	1 6	Outdoor unit high discharge temperature-Safety control(Compressor stop)
E 4	4 0	High temperature(over 30°C)of outdoor as heating mode
E 4	4 1	Low temperature(under -10°C)of outdoor as cooling mode
E 4	5 8	Outdoor Fan Error
E 4	6 1	Inverter compressor starting failure(5times)
E 4	6 2	Compressor trip by input current control mode(PFC over current)
E 4	6 3	Compressor trip by OLP temperature control mode
E 4	6 4	Over current
E 4	6 5	Compressor VIlimit Error
E 4	6 6	DClink Voltage error(under 150V,over 410V)
E 4	6 7	Abnormal compressor running(Compressor Rotation Error)
E 4	6 8	Current sensor error
E 4	6 9	DClink Voltage sensor error
E 4	7 1	OTP Error
E 4	7 2	Inverter micom zero-crossing error
E 4	8 3	Over voltage Error

CODE NO:DB98-32930A | OUTDOOR UNIT

This Document can not be used without Samsung's authorization.

■ RJ060F3HXEA

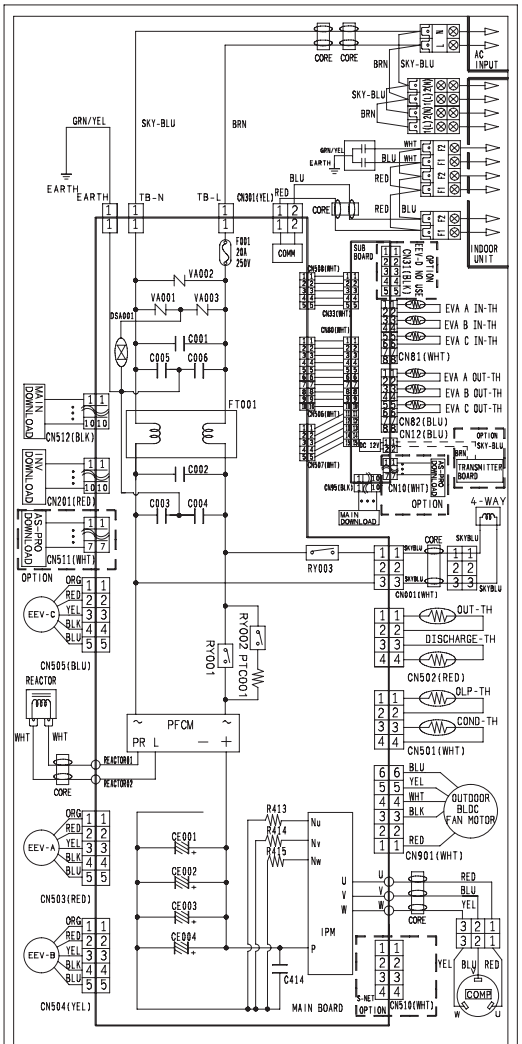

DISPLAY		DESCRIPTION
E 1	2 1	Indoor unit room temperature sensor error(Open/Short)
E 1	2 2	Indoor unit heat exchanger in temperature sensor error(Open/Short)
E 1	2 3	Indoor unit heat exchanger out temperature sensor error(Open/Short)
E 1	2 8	Indoor unit sensor error-Evaporator pipe in sensor - Self diagnosis
E 1	2 9	Indoor unit sensor error-Evaporator pipe out sensor - Self diagnosis
E 1	5 4	Indoor Unit FAN Error
E 1	6 3	Indoor Unit EEPROM Option Error
E 1	7 1	EVA-MID BREAK AWAY
E 1	7 2	EVA-IN BREAK AWAY
E 1	7 3	EVA-OUT BREAK AWAY
E 2	0 1	The number of indoor unit mismatched
E 2	0 2	Communication error between the outdoor and indoor unit
E 2	0 3	Outdoor communication error between main MICOM and Inv MICOM
E 2	0 6	Outdoor communication error between main PCB and sub PCB
E 2	2 1	Outside temperature sensor error(Shor/Open)
E 2	3 7	Condenser temperature sensor error(Shor/Open)
E 2	4 6	Outdoor unit sensor error
E 2	5 1	Compressor Discharge temperature sensor error
E 2	8 1	Compressor discharge sensor detached-Self diagnosis
E 3	2 0	Compressor OLP sensor error(Short/Open)
E 3	3 0	Evain1 Sensor Short/Open
E 3	3 1	Evain2 Sensor Short/Open
E 3	3 2	Evain3 Sensor Short/Open
E 3	3 5	EvaOut1 Sensor Short/Open
E 3	3 6	EvaOut2 Sensor Short/Open
E 3	3 7	EvaOut3 Sensor Short/Open
E 4	0 1	Outdoor unit freezing(Compressor stop)
E 4	0 4	Outdoor unit overload-Safety control(Compressor stop)
E 4	1 6	Outdoor unit high discharge temperature-Safety control(Compressor stop)
E 4	4 0	High temperature(over 30°C)of outdoor as heating mode
E 4	4 1	Low temperature(under -10°C)of outdoor as cooling mode
E 4	5 8	Outdoor Fan Error
E 4	6 1	Inverter compressor starting failure(5times)
E 4	6 2	Compressor trip by input current control mode(PFC over current)
E 4	6 3	Compressor trip by OLP temperature control mode
E 4	6 4	Over current
E 4	6 5	Compressor Vlimit Error
E 4	6 6	DClink Voltage error(under 150V,over 410V)
E 4	6 7	Abnormal compressor running(Compressor Rotation Error)
E 4	6 8	Current sensor error
E 4	6 9	DClink Voltage sensor error
E 4	7 1	OTP Error
E 4	7 2	Inverter micom zero-crossing error
E 4	8 3	Over voltage Error

CODE NO:DB98-32932A | OUTDOOR UNIT

This Document can not be used without Samsung's authorization.

■ RJ070F4HXEA/RJ080F4HXEA

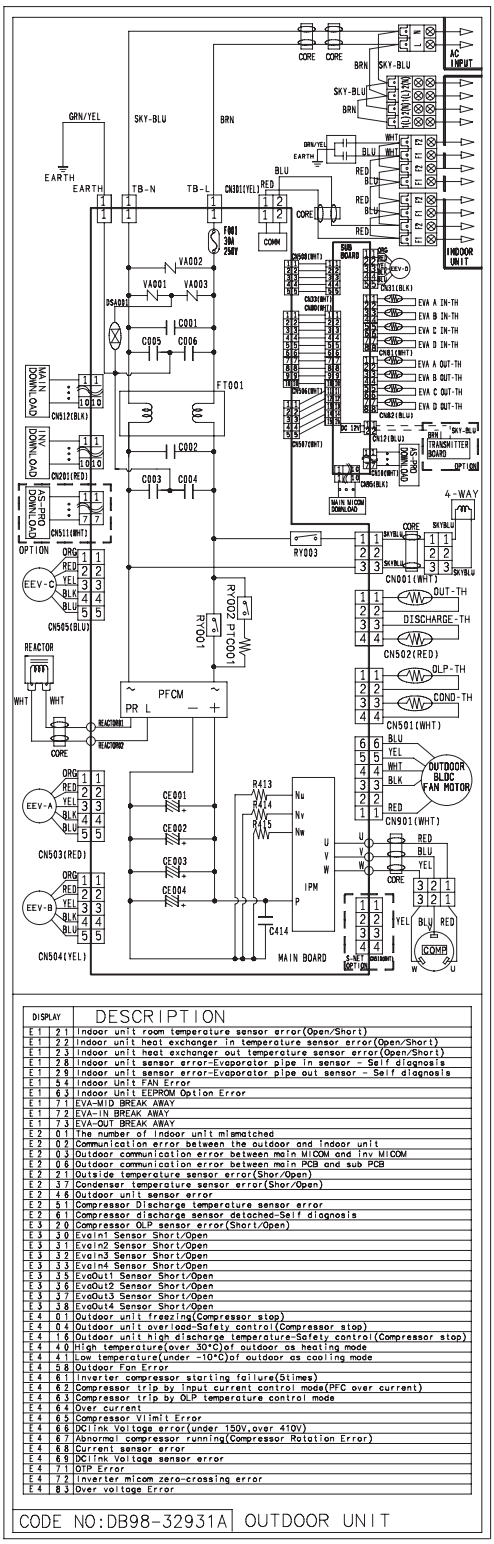
AC INPUT
INDOOR UNIT
OUTDOOR BLDC FAN MOTOR
COMP
MAIN BOARD
SUB BOARD
TRANSMITTER BOARD
4-WAY
OPTION
REACTOR
PFCM
IPM
EVA A IN-TH
EVA B IN-TH
EVA C IN-TH
EVA D IN-TH
EVA A OUT-TH
EVA B OUT-TH
EVA C OUT-TH
EVA D OUT-TH
OUT-TH
DISCHARGE-TH
OLP-TH
COND-TH
CN001(WHT)
CN502(RED)
CN501(WHT)
CN901(WHT)
CN505(BLU)
CN503(RED)
CN504(YEL)
CN512(BLK)
CN201(RED)
CN511(WHT)
CN901(YEL)
CN801(YEL)
CN811(BLK)
CN821(BLU)
CN812(BLU)
CN806(WHT)
CN807(WHT)
CN808(WHT)
CN809(WHT)
CN810(WHT)
CN820(WHT)
CN822(WHT)
CN830(WHT)
CN840(WHT)
CN850(WHT)
CN860(WHT)
CN870(WHT)
CN880(WHT)
CN890(WHT)
CN8B0(WHT)
CN8C0(WHT)
CN8D0(WHT)
CN8E0(WHT)
CN8F0(WHT)
CN8G0(WHT)
CN8H0(WHT)
CN8J0(WHT)
CN8K0(WHT)
CN8L0(WHT)
CN8M0(WHT)
CN8N0(WHT)
CN8P0(WHT)
CN8Q0(WHT)
CN8R0(WHT)
CN8S0(WHT)
CN8T0(WHT)
CN8U0(WHT)
CN8V0(WHT)
CN8W0(WHT)
CN8X0(WHT)
CN8Y0(WHT)
CN8Z0(WHT)
CN900(WHT)
CN910(WHT)
CN920(WHT)
CN930(WHT)
CN940(WHT)
CN950(WHT)
CN960(WHT)
CN970(WHT)
CN980(WHT)
CN990(WHT)
CN9A0(WHT)
CN9B0(WHT)
CN9C0(WHT)
CN9D0(WHT)
CN9E0(WHT)
CN9F0(WHT)
CN9G0(WHT)
CN9H0(WHT)
CN9J0(WHT)
CN9K0(WHT)
CN9L0(WHT)
CN9M0(WHT)
CN9N0(WHT)
CN9P0(WHT)
CN9Q0(WHT)
CN9R0(WHT)
CN9S0(WHT)
CN9T0(WHT)
CN9U0(WHT)
CN9V0(WHT)
CN9W0(WHT)
CN9X0(WHT)
CN9Y0(WHT)
CN9

8. Schematic Diagram

8-1 INDOOR UNIT

■ MH✳✳✳FNEA/MH✳✳FVEA

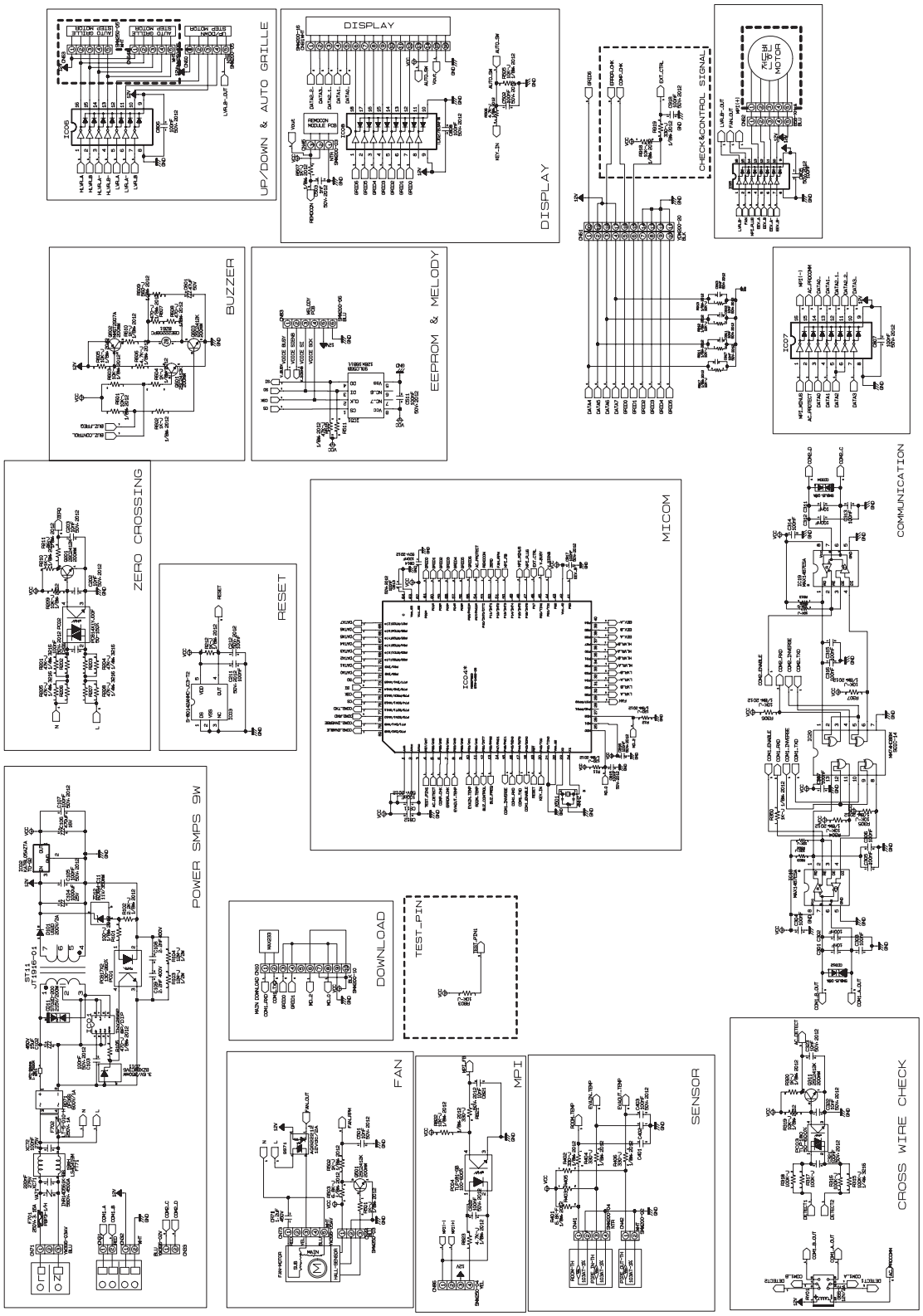

This Document can not be used without Samsung's authorization.

■ MH✳✳✳FBEA

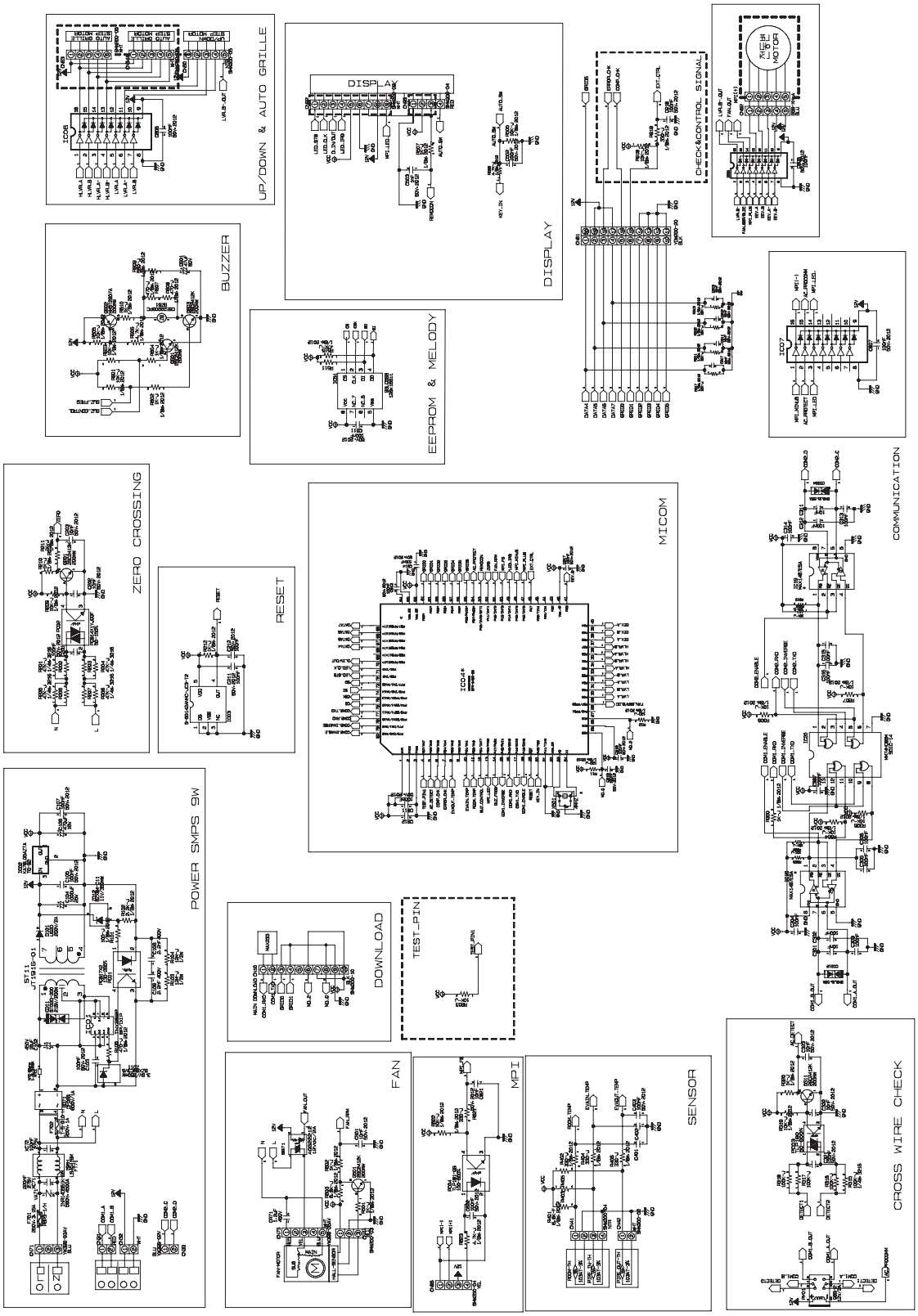

This Document can not be used without Samsung's authorization.

■ MH✳✳✳FAEA

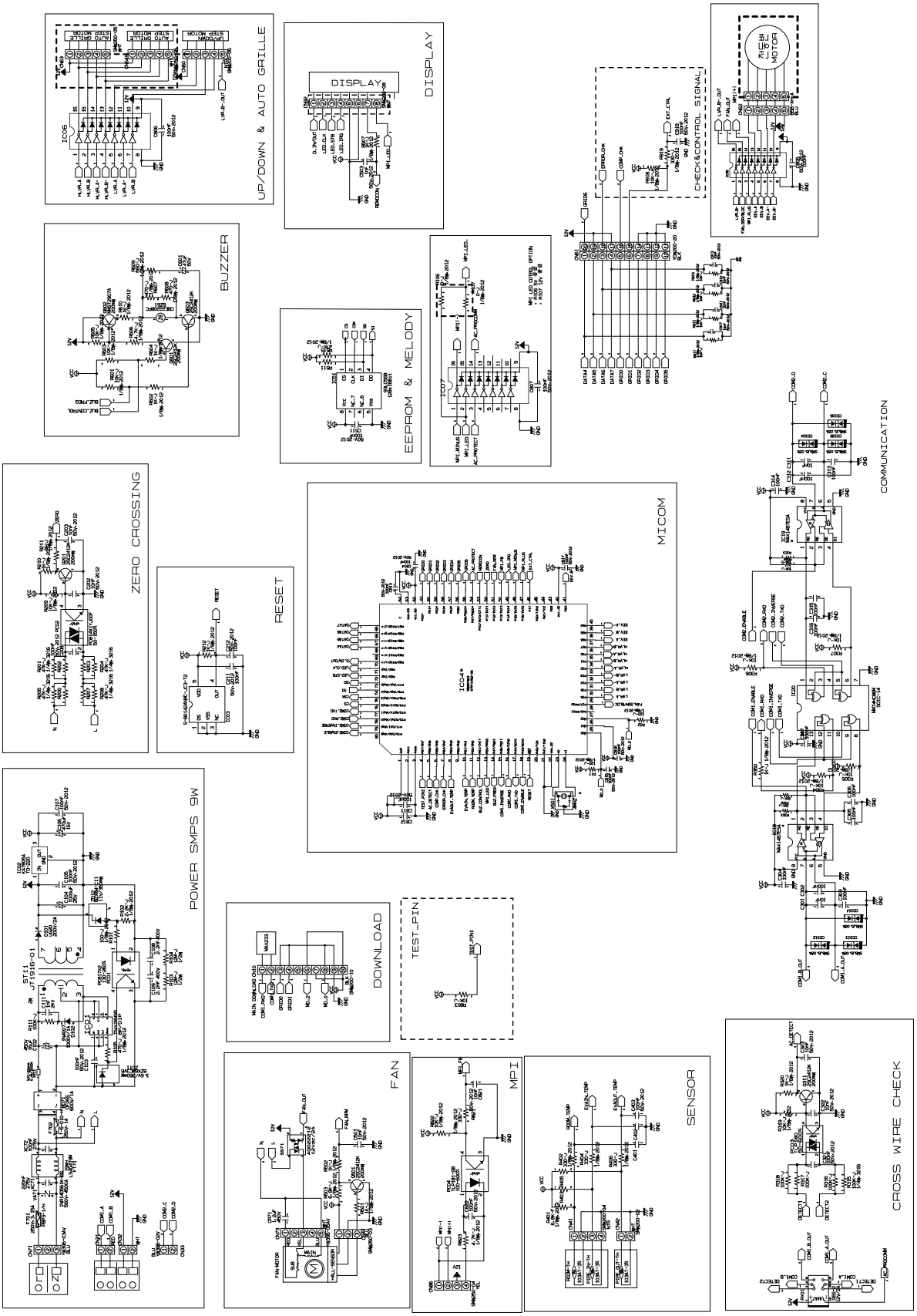

This Document can not be used without Samsung's authorization.

■ MH✳✳✳FSEA

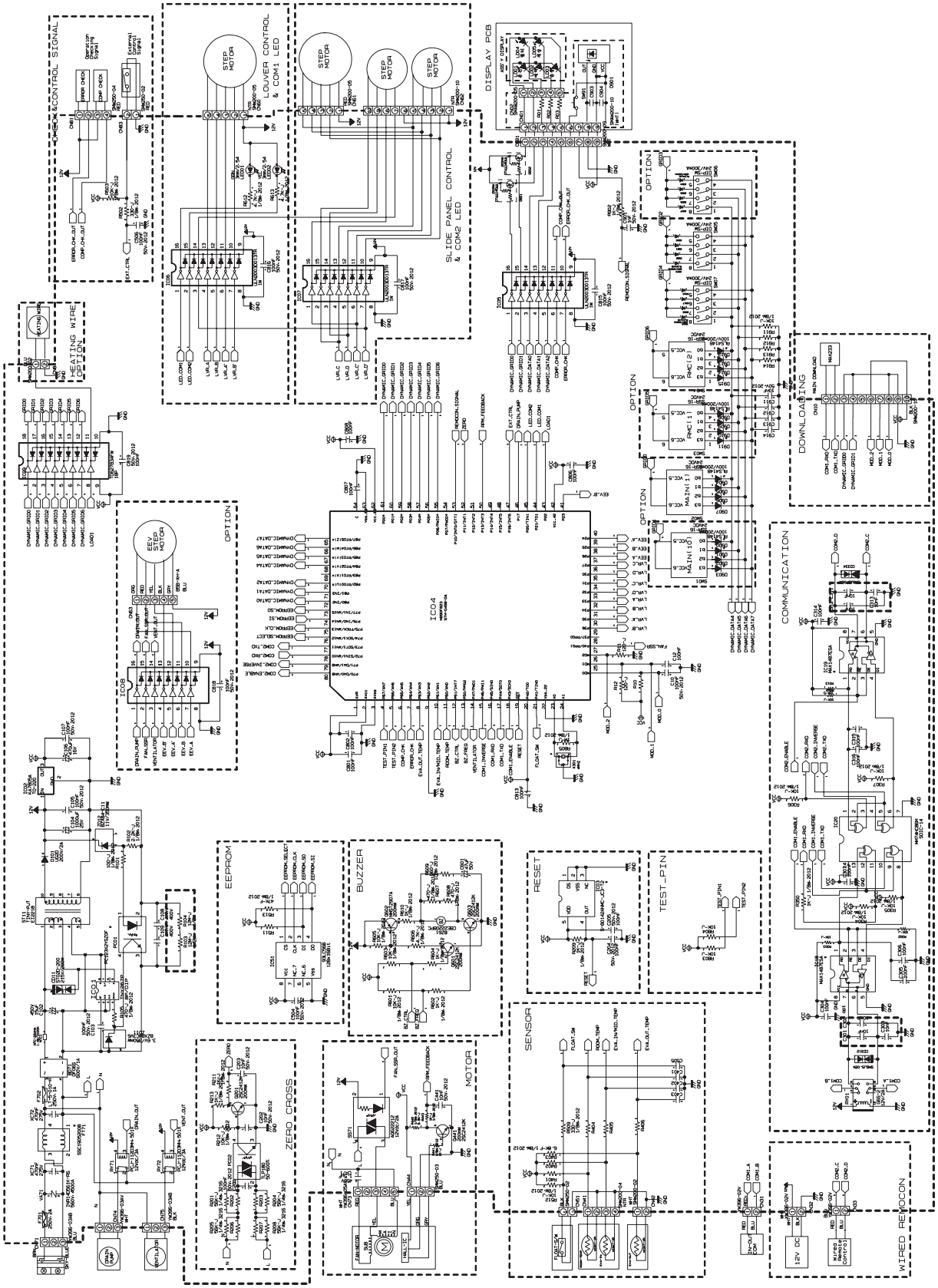

This Document can not be used without Samsung's authorization.

■ MH✳✳✳FMEA

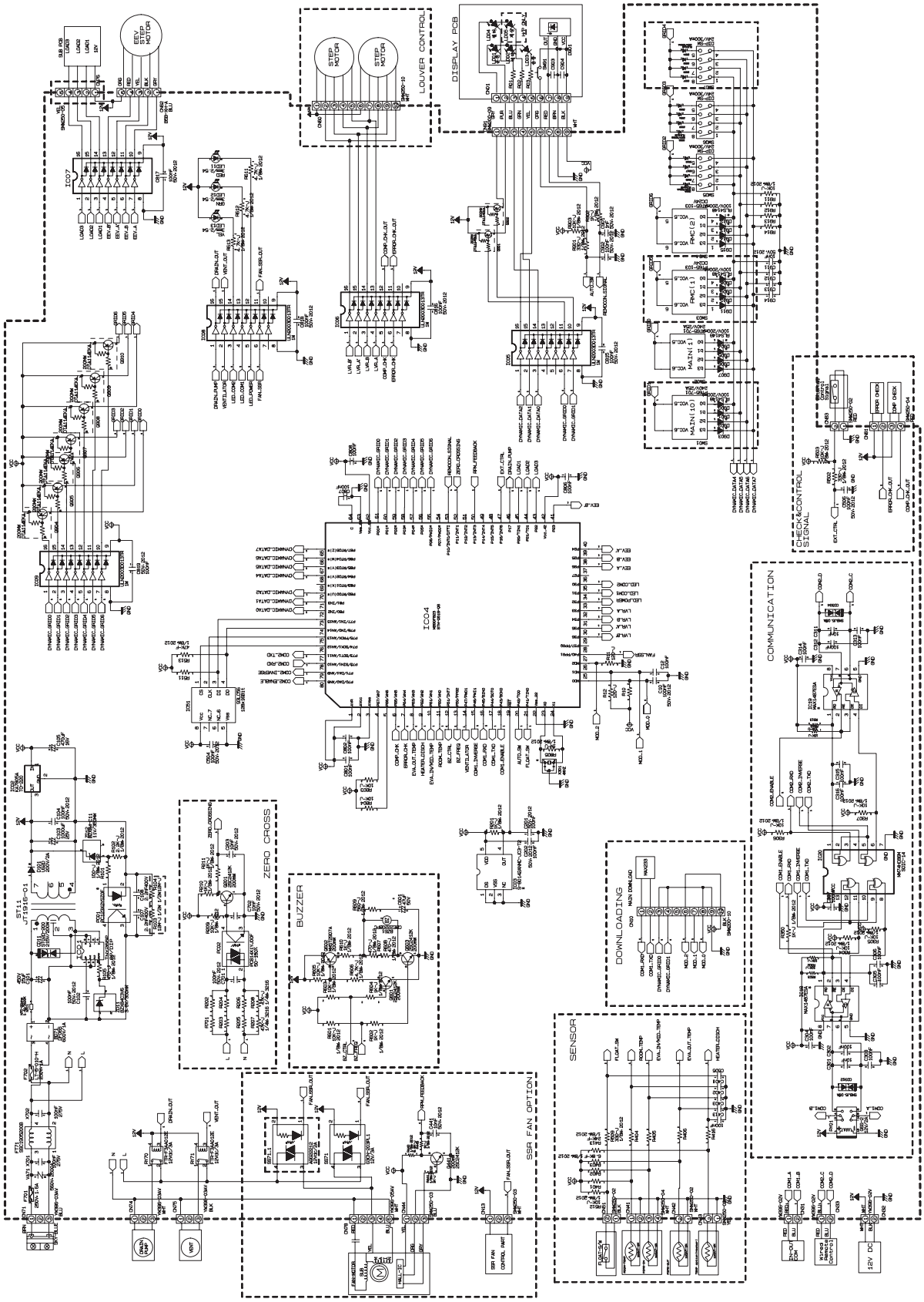

This Document can not be used without Samsung's authorization.

■ MH✳✳✳FJEA

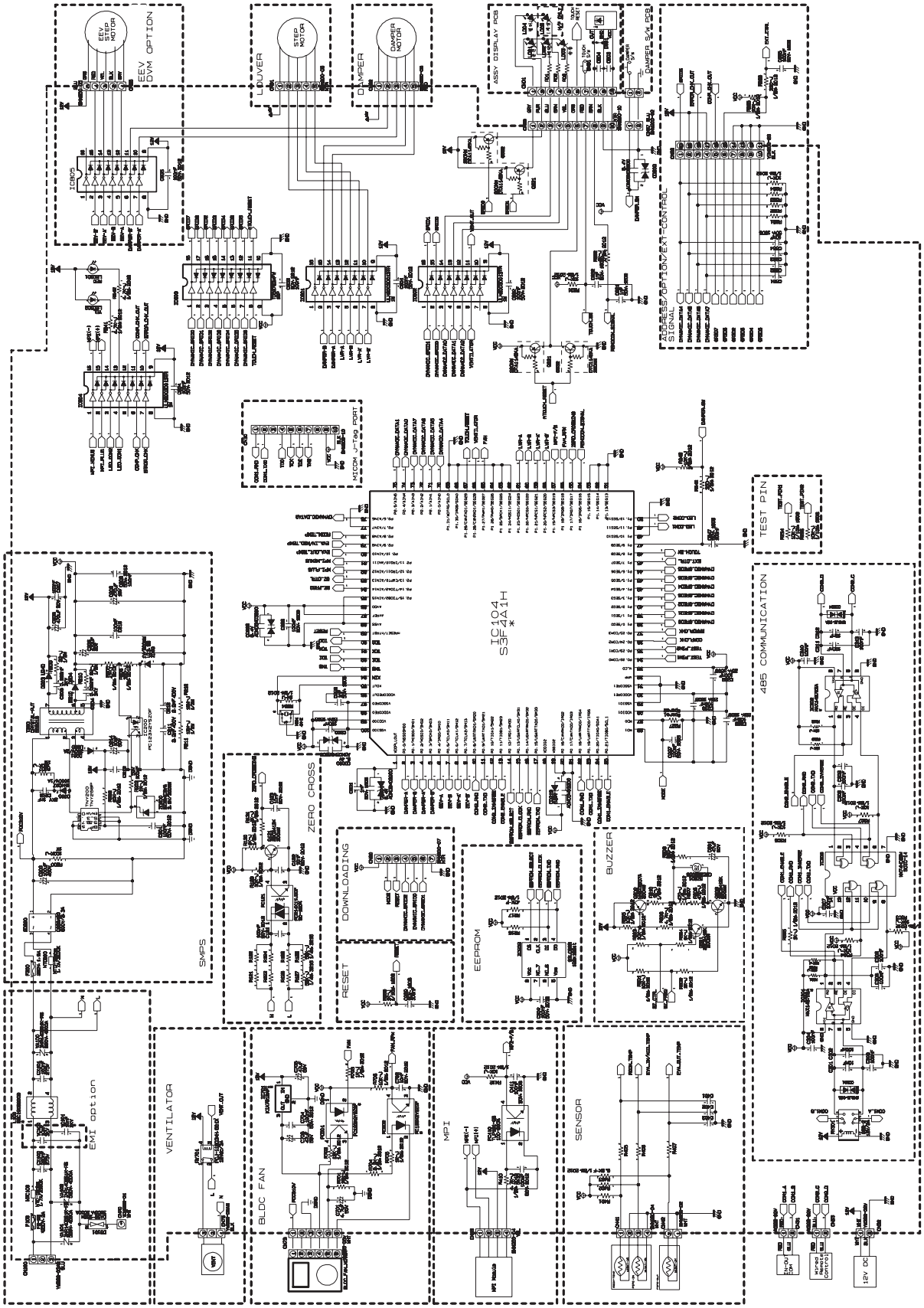

This Document can not be used without Samsung's authorization.

■ NJ ✳✳✳LHXEA/MH✳✳✳FUEA

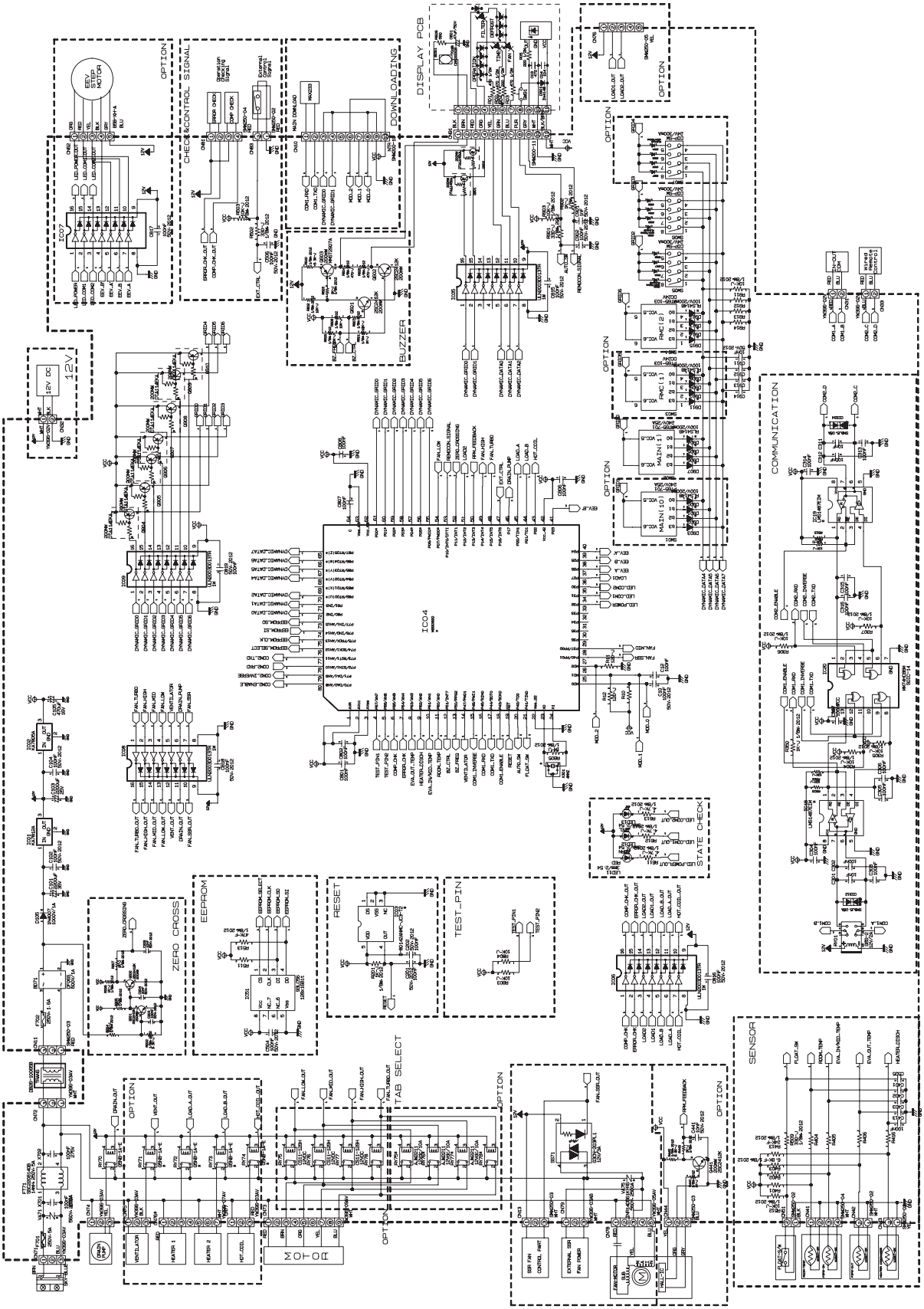

This Document can not be used without Samsung's authorization.

■AQV***PSBN

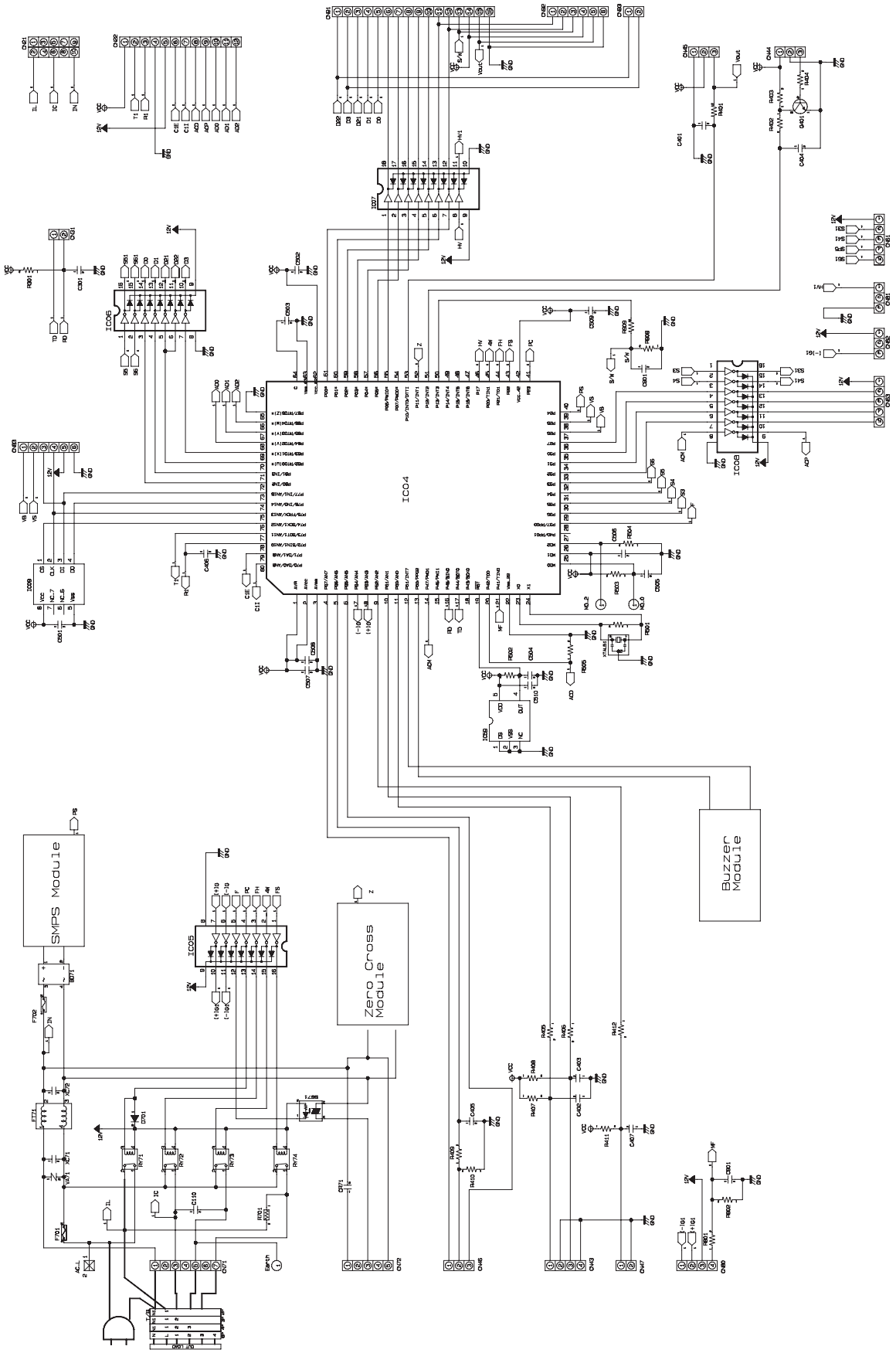

This Document can not be used without Samsung's authorization.

■ AQV***YWAN

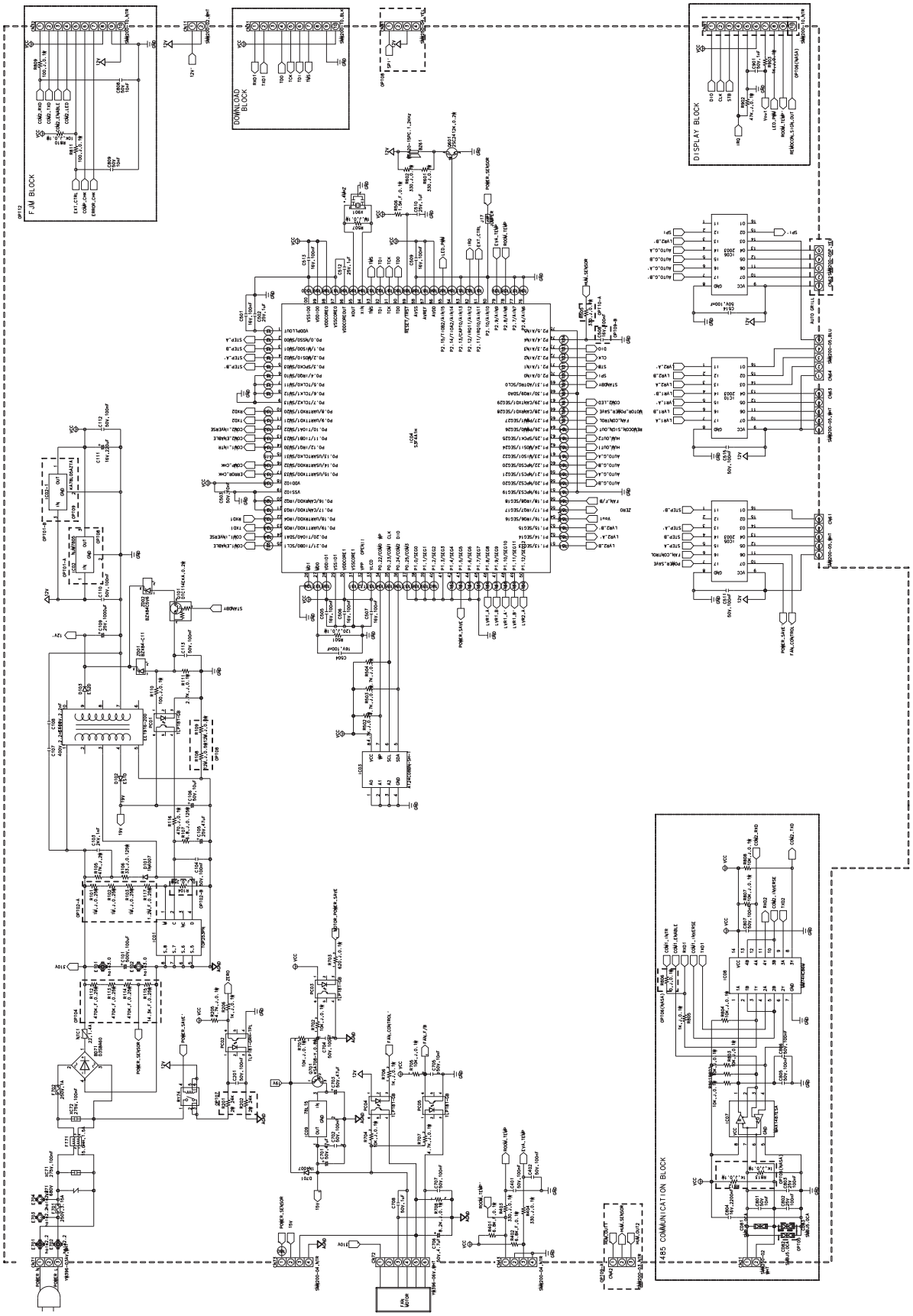

This Document can not be used without Samsung's authorization.

8-2 OUTDOOR UNIT

■ RJ040F2HXEA/RJ050F2HXEA (PCB MAIN)

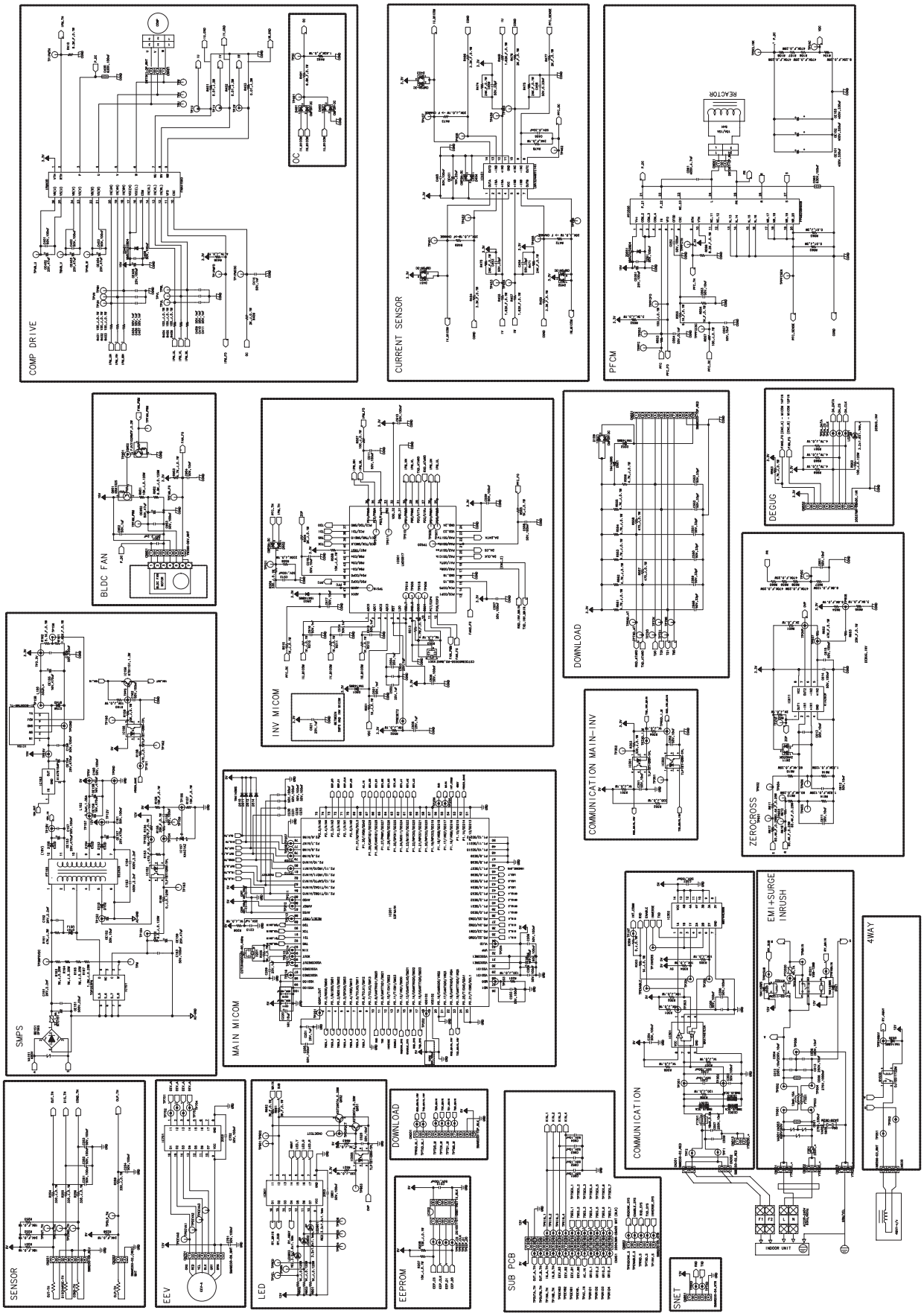

This Document can not be used without Samsung's authorization.

■ RJ040F2HXEA/RJ050F2HXEA (PCB SUB)

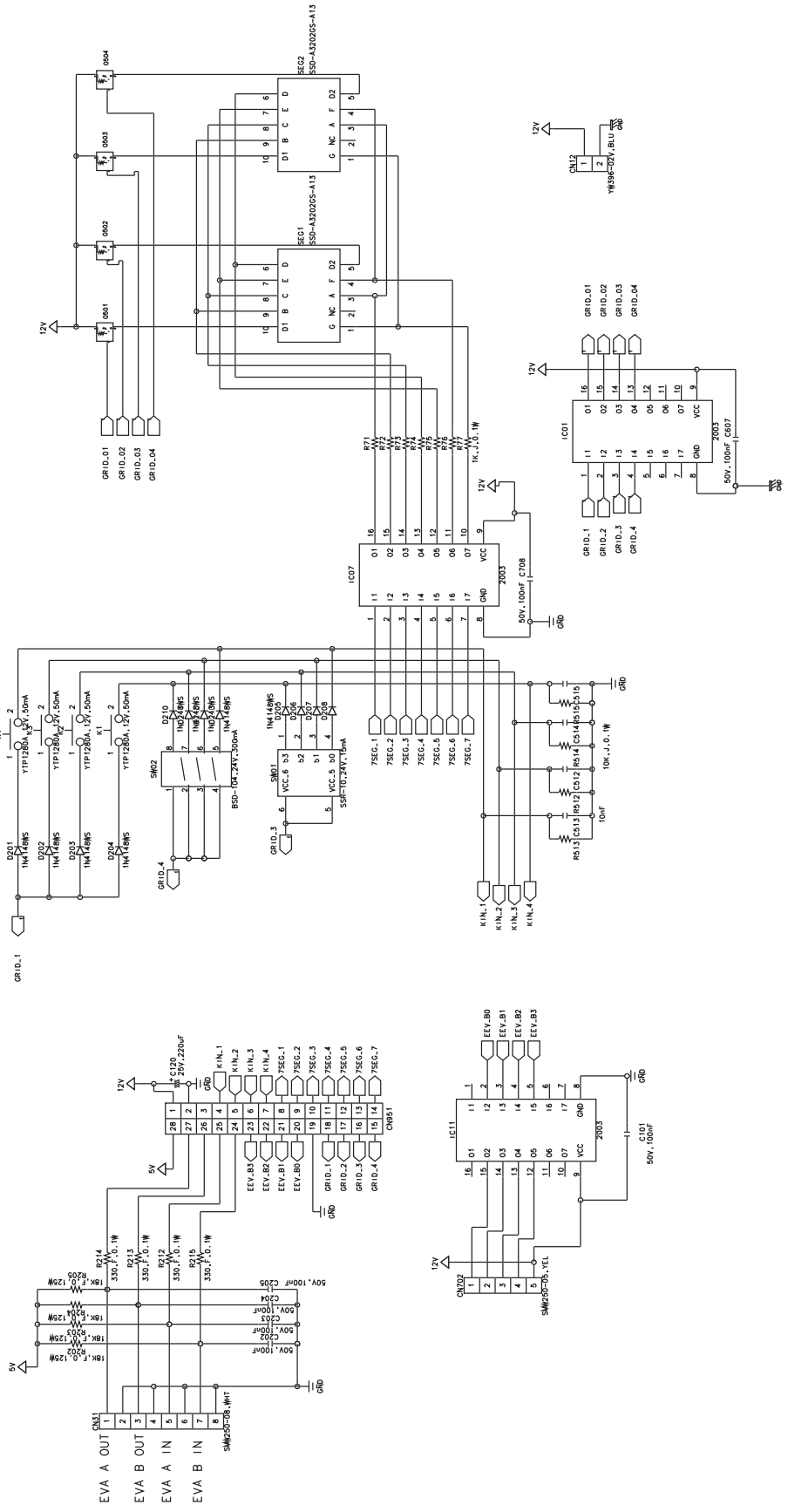

This Document can not be used without Samsung's authorization.

■ RJ060F3HXEA/RJ070F4HXEA/RJ080F4HXEA (PCB MAIN)

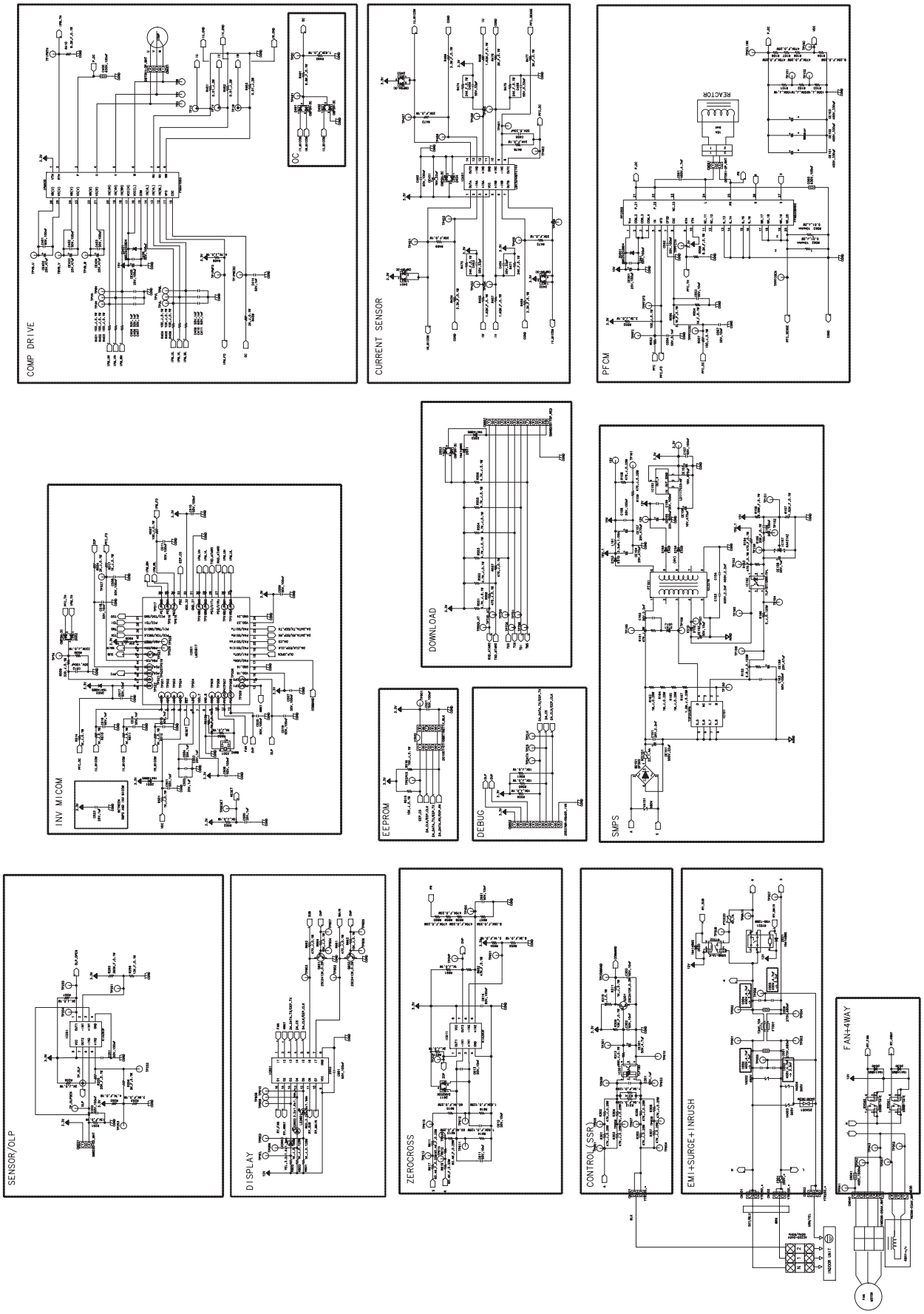

This Document can not be used without Samsung's authorization.

■ RJ060F3HXEA/RJ070F4HXEA/RJ080F4HXEA (PCB SUB)

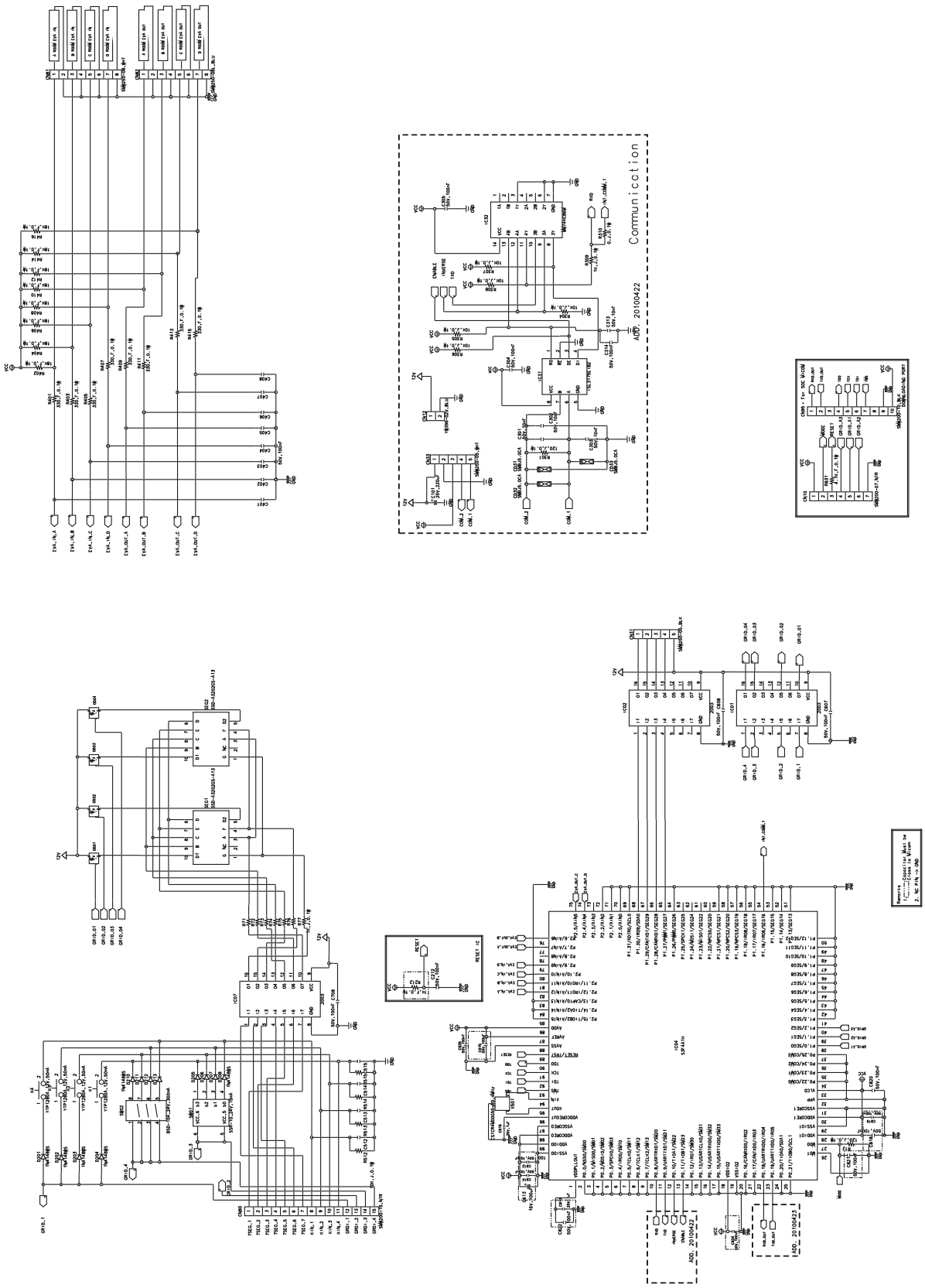

This Document can not be used without Samsung's authorization.

MEMO

9. Preference Sheet

9-1 Selecting Area for Installtaion

Select an area for installation that is suitable to customer's needs.

9-1-1 Indoor Unit

1. Make sure that you install the indoor unit in an area providing good ventilation.
   It must not be blocked by an obstacle affecting the airflow near the air inlet and the air outlet.

2. Make sure that you install the indoor unit in an area allowing good air handling and endurance of vibration of the indoor unit.

3. Make sure that you install the indoor unit in an area where there is no source of heat or vapor nearby.

4. Make sure that you install the indoor unit in an area from which hot or cool air is spread evenly in a room.

5. Make sure that you install the indoor unit in an area away from TVs, audio units, cordless phones, fluorescent lighting fixtures and other electrical appliances (at least 1 meter).

6. Make sure that you install the indoor unit in an area which provides easy pipe connection with the outdoor unit, and easy drainage for condensed water.

7. Make sure that you install the indoor unit in an area which is large enough to accommodate the measurements shown in figure on the next page.

- It is harmful to the air conditioner if it is used in the following environments: greasy areas (including areas near machines), salty areas such as coast areas, areas where sulfuric gas is present such as hot spring areas. Contact your dealer for advice.

9-1-2 Outdoor Unit

1. Make sure that you install the outdoor unit in area not exposed to the rain or direct sun light.(Install a separate sunblind if exposed to direct sun light.)

2. Make sure that you install the outdoor unit in area allowing the good air moment, not amplifying noise or vibration, especially to avoid disturbing neighbors. (Fix the unit firmly if it is mounted in a high place.)

3. Make sure that you install the outdoor unit in area providing the good ventilation and which is not dusty. It must not be blocked by any obstacle affecting the airflow near the air inlet and the air outlet.

4. Make sure that you install the outdoor unit in area free from animals or plants.

5. Make sure that you install the outdoor unit in area not blocking the traffic.

6. Make sure that you install the outdoor unit in area easy to drain condensed water from the indoor unit.

7. Make sure that you install the outdoor unit in area which provides easy connection within the maximum allowable length of a coolant pipe.
   If you install the excessive length of pipe, add additional refrigerant as 15g or 10g per unit meter; refer to the table below.

Model	Total connecting pipe length (L)	Adding refrigerant
RJ040F2HX**	LT≤15m	Chargeless
	LT>15m	(LT- 15m)x10g
RJ050F2HX**	LT≤20m	Chargeless
	LT>20m	(LT- 20m)x20g
RJ060F3HX**	LT≤30m	Chargeless
	LT>30m	(LT- 30m)x10g
RJ070/080F4HX**	LT≤40m	Chargeless
	LT>40m	(LT- 40m)x10g

8. Make sure that you install the outdoor unit in an area which is large enough to accommodate the measurements shown in figure on the next page.

9-1-3 Remote Control Unit

1. Make sure that you use the remote control unit in an area free from obstacles such as curtains etc, which may block signals from the remote control unit.

2. Make sure that you put the remote control unit in an area not exposed to direct sunlight, and where there is no source of heat.

3. Make sure that you use the remote control unit in an area away from TVs, audio units, cordless phones, fluorescent lighting fixtures and other electrical appliances (at least 1 meter).

9-2 Connecting Up and Purging the Circuit

- The air in the indoor unit and in the pipe must be purged. If air remains in the refrigeration pipes, it will affect the compressor, reduce to cooling capacity and could lead to a malfunction. Refrigerant for air purging is not charged in the outdoor unit. Use Vacuum Pump as shown at the right figure. Each unit must be purged in turn.

■ RJ040F2HXEA/RJ050F2HXEA

1. Check the piping connections.

2. Connect the charging hose of low pressure side of manifold gauge to the packed valve having a service port (3/8" service valve) as shown at the figure.

3. Open the valve of the low pressure side of manifold gauge counter-clockwise.

4. Purge the air from the system using vacuum pump for about 10 minutes.
   - Close the valve of the low pressure side of manifold gauge clockwise.
   - Make sure that pressure gauge show -0.1MPa(-76cmHg) after about 10 minutes.
   - This procedure is very important in order to avoid gas leak.
   - Turn off the vacuum pump
   - Remove the hose of the low pressure side of manifold gauge.

5. Set valve cork of both liquid side and gas side of packed valve to the open position.

6. Mount the valve stem nuts and the service port cap to the valve, and tighten them at the torque of 183kgf•cm with a torque wrench.

7. Check for gas leakage.
   - At this time, especially check for gas leakage from the 3 way valve's stem nuts, and from the service port cap.

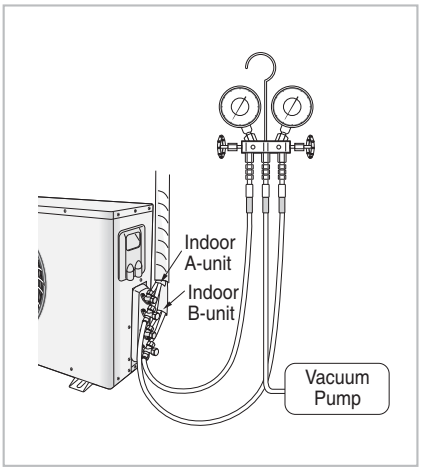

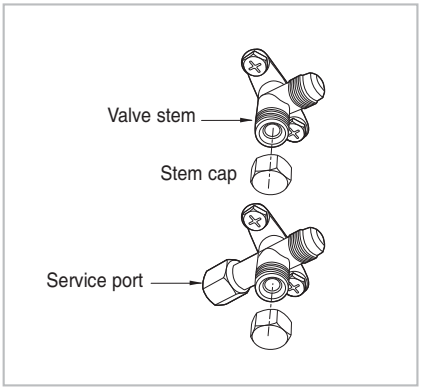

■ RJ060F3HXEA/RJ070F4HXEA/RJ080F4HXEA

1 Check the piping connections.

2 Connect the charging hose of low pressure side of manifold gauge to the packed valve having a service port (5/8” Packed valve)as shown at the figure (Value stem:1/2”-20UNF).

WARNING:
Make the electrical connection and leave the system into “stand by mode”. Do not turn on the system!.
This is necessary for better vacuum operation (full OPEN position of Electronic Expansion Valve -EEV -).

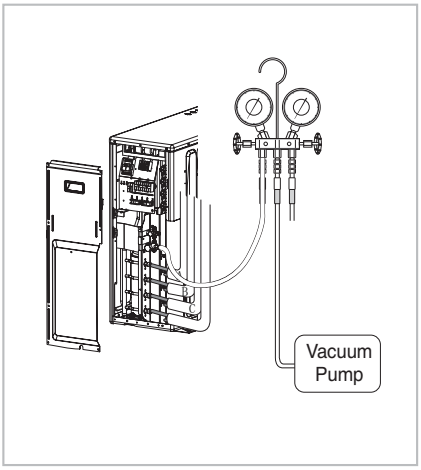

3 Open the valve of the low pressure side of manifold gauge ounter clockwise.

4 Purge the air from the system using vacuum pump for about 30 minutes.
- Close the valve of the low pressure side of manifold gauge clockwise.
- Make sure that pressure gauge show -0.1MPa(-76cmHg)after about 30 minutes.
  This procedure is very important in order to avoid gas leak.
- Turn off the vacuum pump.
- Remove the hose of the low pressure side of manifold gauge.

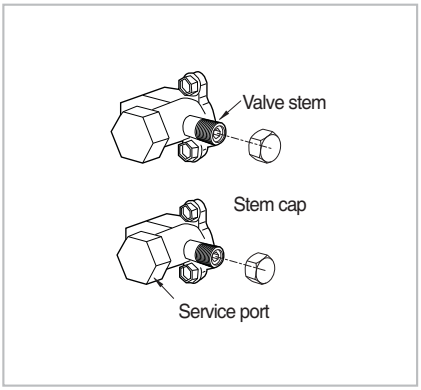

5 Set valve cork of both liquid side and gas side of packed valve to the open position.

6 Mount the valve stem nuts and the service port cap to the valve,and tighten them at the torque of 183kgf•cm with a torque wrench.

7 Check for gas leakage.
- At this time,especially check for gas leakage from the 3-way valve ’s stem nuts,and from the service port cap.

9-3 Refrigerant Refill

Refill an air conditioner with refrigerant when refrigerant has been leaked at installing or using.

1) Purge air(for new installation only).

2) Turn the 3 way valve clockwise to close, connect the pressure gauge (low pressure side) to the service valve, and open the 3 way valve again.

3) Connect the tank to refill with refrigerant.

4) Set the unit to cool operation mode.

5) Check the pressure indicated by the pressure gauge(low pressure side).

   *** Standard pressure should be 8.0~9.0kg/cm² in a regular and high operation mode.**

6) Open the refrigerant tank and fill with refrigerant until the rated pressure is reached.

   *** It is recommended not to pour the refrigerant in too quickly, but gradually while operating a pressure valve.**

7) Stop operation of the air conditioner.

8) Close the 3 way valve, disconnect the pressure gauge, and open the 3 way valve again.

9) Close the cap of each valve.

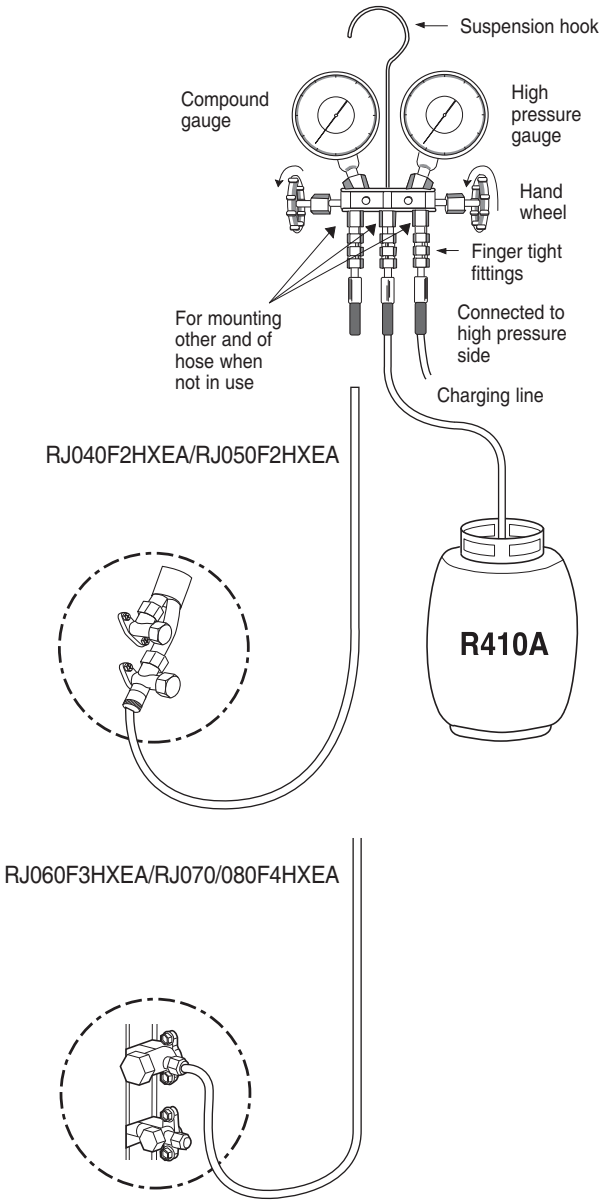

9-4 Refrigerant Adjustment

Class	At installation		At service	
Connection Pipe Length	Air-Purge Method	Refrigerant Adjustment	Air-Purge Method	Refrigerant Quantity
Standard < TOTAL ≤ 30m (RJ040F2HXEA) 30m(RJ050F2HXEA) 45m(RJ060F3HXEA) 70m(RJ070F4HXEA/ RJ080F4HXEA)	Refer to the detailed Connecting up and purging the circuit. (9-2 page)	Unnecessary	Purge air using a vacuum pump or an additional refrigerant cylinder.	refer to specification sheet
Max. < TOTAL ≤ 30m (RJ040F2HXEA) 30m(RJ050F2HXEA) 45m(RJ060F3HXEA) 70m(RJ070F4HXEA/ RJ080F4HXEA)		Add "10g" of refrigerant (R410A) for every 1m.		Add "10g" of refrigerant (R410A) for every 1m.

It would be the best choice to use the standard tube length to keep the basic quality of Room Air conditioner, for example cooling and heating capacity, sound level, vibration level, and reliability.
But, according to a certain different installation condition, the connection tube length could be changed in the recommendation length that is shown above.
In this case, installer should keep the installation condition to keep the quality of Room Air conditioner.

- Refrigerant should be charged additionally as written above according to the change of the length of the connection tube.
  It needs to affect the decrease in cooling and heating capacity or of the reliability of compressor that may be caused by a lack of refrigerant.
- Installation position difference between the indoor unit and the outdoor unit should not exceed over than 15 meters.
- When the connection pipe is been extended longer than 5 meters, it might need to change the diameter of the electrical wire to a larger size in order to keep a voltage drop for starting room air conditioner is not less than 85% of the rated voltage. And then, a voltage meter will be useful to check the rate of the voltage drop.

9-5 Flare Nut Fixing Torque

Outer diameter	Torque(kg·cm)	
	Fixing Torque	Final Torque
ø 6.35 mm (Liquid Side)	160	200
ø 9.52 mm (Gas Side)	300	350
ø 12.7 mm (Gas Side)	500	550

9-6 "Pump down" Procedure

Pump down will be carried out when an evaporator is replaced or when the unit is relocated in another area.

RJ040F2HXEA/RJ050F2HXEA

1) Remove the caps from the 2 way valve and the 3 way valve.

2) Turn the 3 way valve clockwise to close and connect a pressure gauge (low pressure side) to the service valve, and open the 3 way valve again.

3) Set the unit to cool operation mode. (Check if the compressor is operating.)

4) Turn the 2 way valve clockwise to close.

5) When the pressure gauge indicates "0" turn the 3 way valve clockwise to close.

6) Stop operation of the air conditioner.

7) Close the cap of each valve.

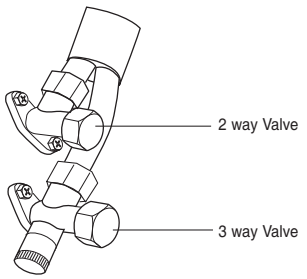

RJ060F3HXEA/RJ070F4HXEA/RJ080F4HXEA

1) Remove the caps from the 3/8" service valve and the 5/8" service valve.

2) Turn the 5/8" service valve clockwise to close and connect a pressure gauge (low pressure side) to the service valve, and open the 5/8" service valve again.

3) Set the unit to cool operation mode. (Check if the compressor is operating.)

4) Turn the 3/8" service valve clockwise to close.

5) When the pressure gauge indicates "0" turn the 5/8" service valve clockwise to close.

6) Stop operation of the air conditioner.

7) Close the cap of each valve.

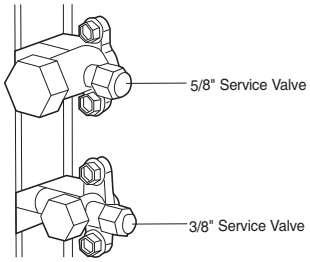

Remarks

Relocation of the air conditioner

- Refer to this procedure when the unit is relocated.
  1. Carry out the pump down procedure (refer to the details of ‘pump down’).
  2. Remove the power cord.
  3. Disconnect the assembly cable from the indoor and outdoor units.
  4. Remove the flare nut connecting the indoor unit and the pipe.
     At this time, cover the pipe of the indoor unit and the other pipe using a cap or vinyl plug to avoid foreign material entering.
  5. Disconnect the pipe connected to the outdoor unit.
     At this time, cover the valve of the outdoor unit and the other pipe using a cap or vinyl plug to avoid foreign material entering.
  6. Make sure you do not bend the connection pipes in the middle and store together with the cables.
  7. Move the indoor and outdoor units to a new location.
  8. Remove the mounting plate for the indoor unit and move it to a new location.

Indoor

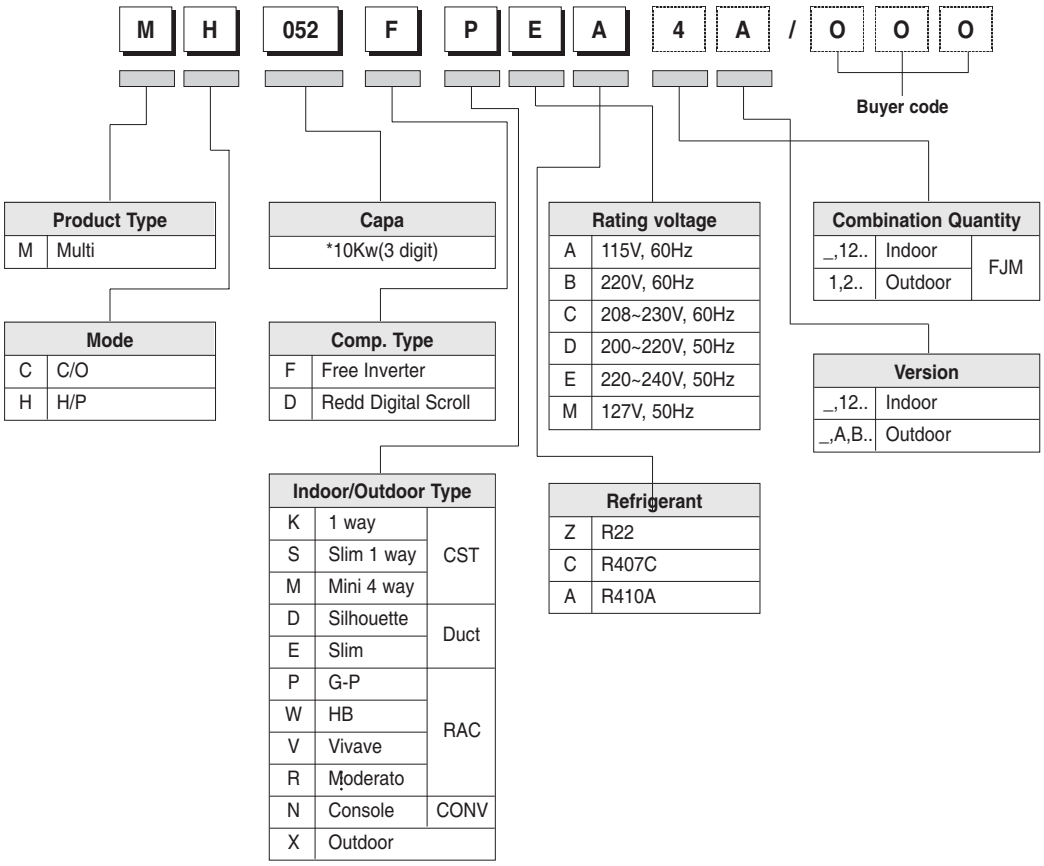

ND	100	H	H	X	E	A	/	SER
(1)	(2)	(3)	(4)	(5)	(6)	(7)		Buyer

(1) Product Type		
N	D	DVM
	J	Free Joint
	M	MULTI
	S	SINGLE
	H	Hydro-Box Water tank

(2) CAPA (3 DIGIT)
KW/BTU/Liter

(3) chassis		
1	1 WAY	CST
2	2 WAY	
M	MINI 4 WAY	
4	4 WAY	
H	HSP	DUCT
S	LSP	
L	(Slim)	
G	CCD (Slim)	
C	Ceiling	CONV
J	Console	
F	Floor	
P	FAC	
B	Mont blanc	RAC
V	Vivace	
Q	Neo-forte (EEV)	
N	Neo-forte	
W	Korea	
R	Crystal	
A	Max	
P	Hydro Unit	HYDRO
W	Water tank	

(4) MODE	
C	C/O
H	H/P

(5) Refrigerant	
R22	R
R410A	X

(6) RATING VOLTAGE	
A	115V, 60Hz
B	220V, 60Hz
C	208~230V, 60Hz
D	200~220V, 50Hz
E	220~240V, 50Hz
F	208~230V, 60Hz, 3~
G	380~415V, 50Hz, 3~
M	127V, 50Hz
H	380V, 60Hz, 3~
J	460V, 60Hz, 3~

(7) VERSION	
1 ~ 9	Korea
A ~ Z	Export
S	Water tank (Solar tank)

Indoor

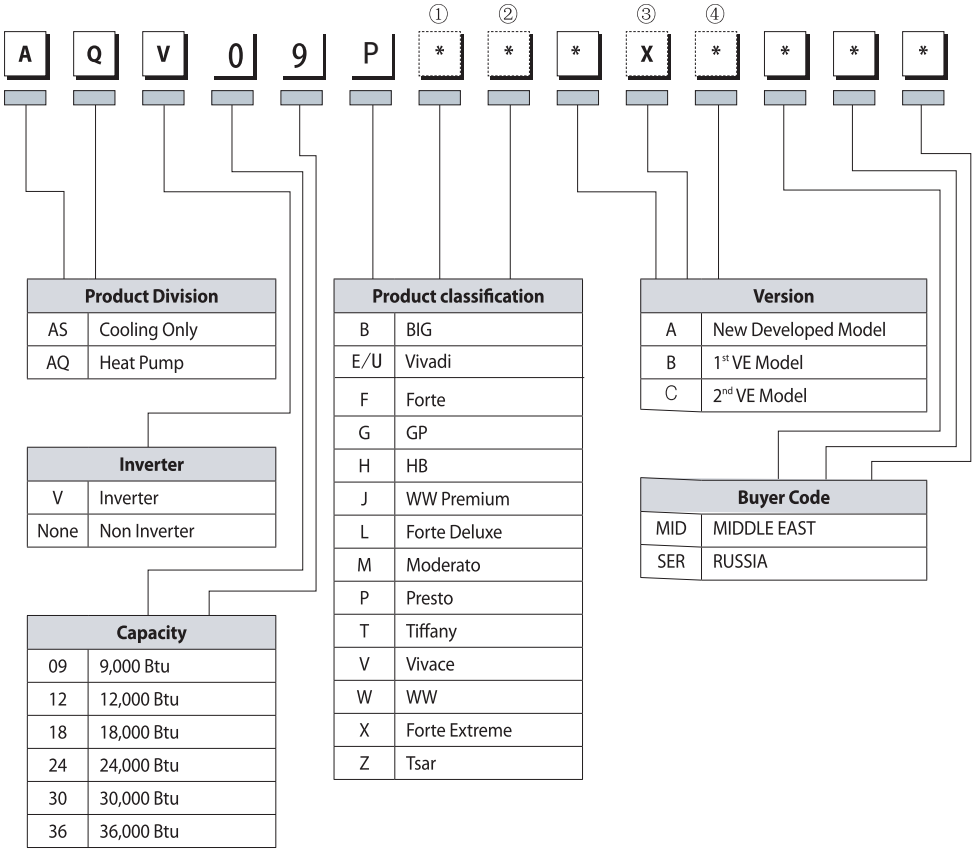

①: Use the " ①
: Don't use the digit for Basic White model.
ex) Silver : S, Black : B, White : W, etc.

②: Use the " ② " digit for Electric Source deviation.
: Only for "XAP", "XAX", "GEM" Buyer.

③: Use the " ③ " digit for classification between indoor and outdoor.
Indoor ➡ "N" & Outdoor ➡ "X".

④: Use the " ④ " digit for KD models.
"CKD" ➡ "1" & "SKD" ➡ "2".

Outdoor

RJ	100	V			H	X	G	A	/	SER
(1)	(2)	(3)	(4)	(5)	(6)	(7)	(8)	(9)		Buyer

(1) Product Type		
R	D	[DVM,EHS]
	J	[FJM,P-Multi]
	C	SINGLE [CAC]

(2) CAPA (3 DIGIT)
HP/KW/BTU/TON

(3) chassis	
V	Inverter Low
H	Inverter High
U	Super
A	High efficiency
N	Normal
S	DVM SLIM
G	GHP
M	DVM MINI
J	DVM HOME
D	WDVM
E	GEO
P	ECO Heating
W	Unitary (Ducted Split)
R	Unitary (RoofTop)

(3) chassis	
F	Fix
B	DVM
K	Pack Multi

(4) Room No.	
	Single,
2	2 Rooms
3	3 Rooms
4	4 Rooms
5	5 Rooms

(5) CAC NON UNIVERSAL		
	Single Non Universal	
1	1 WAY	CST
2	2 WAY	
M	MINI 4 WAY	
4	4 WAY	
H	HSP	DUCT
S	LSP	
L	(Slim)	
G	(CCD)	

(5) chassis		
C	Ceiling	CONV
J	Console	
F	Floor	
P	FAC	

(6) MODE	
C	C/O
H	H/P
R	H/R
E	H/P + HEATER
G	C/O + HEATER
T	TROPICAL C/O
Q	TROPICAL H/P
V	COLD

(7) Refrigerant	
R22	R
R410A	X

(8) RATING VOLTAGE	
A	115V, 60Hz
B	220V, 60Hz
C	208~230V, 60Hz
D	200~220V, 50Hz
E	220~240V, 50Hz
F	208~230V, 60Hz, 3~
G	380~415V, 50Hz, 3~
M	127V, 50Hz
H	380V, 60Hz, 3~
J	460V, 60Hz, 3~

(9) VERSION	
1 ~ 9	KOREA
A ~ Z	EXPORT

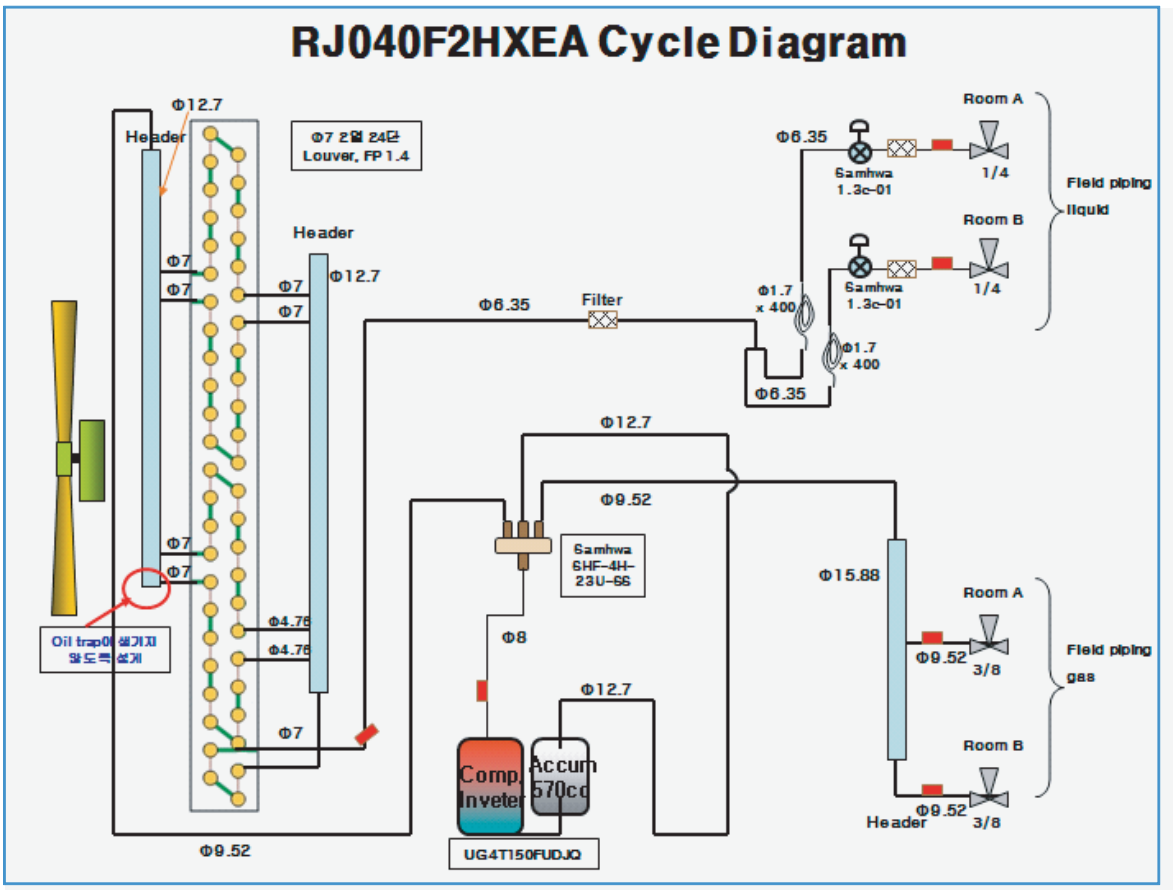
RJ040F2HXEA Cycle Diagram
Φ12.7
Header
Φ7 2열 24단
Louver, FP 1.4
Header
Φ7
Φ7
Φ7
Φ7
Φ12.7
Φ6.35
Filter
Φ1.7
x 400
Φ6.35
Φ1.7
x 400
Φ6.35
Samhwa
1.3c-01
Samhwa
1.3c-01
Room A
1/4
Room B
1/4
Field piping
liquid
Φ12.7
Φ9.52
Samhwa
6HF-4H-
23U-66
Φ15.88
Φ7
Φ7
Φ4.76
Φ4.76
Φ7
Φ8
Φ12.7
Φ9.52
3/8
Room A
Room B
Φ9.52
3/8
Header
Field piping
gas
Comp.
Inveter
Accum
570cc
UG4T150FUDJQ
Φ9.52

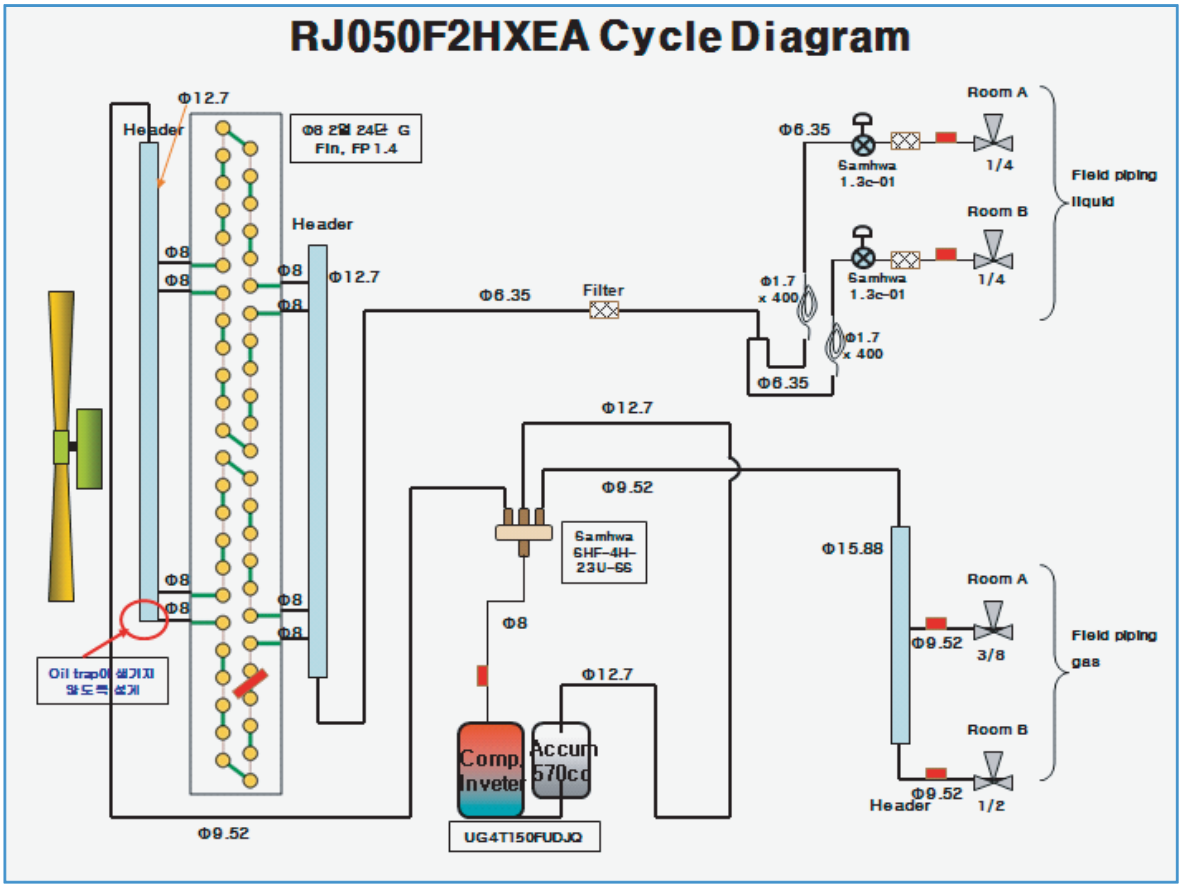
RJ050F2HXEA Cycle Diagram
Φ12.7
Header
Φ6 2열 24단 G
Fin, FP 1.4
Header
Φ8
Φ8
Φ8
Φ8
Φ12.7
Φ6.35
Filter
Φ1.7
x 400
Φ6.35
Φ1.7
x 400
Φ6.35
Samhwa
1.3c-01
Samhwa
1.3c-01
Room A
1/4
Room B
1/4
Field piping
liquid
Φ12.7
Φ9.52
Samhwa
6HF-4H-
23U-66
Φ15.88
Φ8
Φ8
Φ8
Φ8
Φ8
Φ12.7
Φ9.52
3/8
Room A
Room B
Φ9.52
1/2
Header
Field piping
gas
Comp.
Inveter
Accum
570cc
UG4T150FUDJQ
Φ9.52

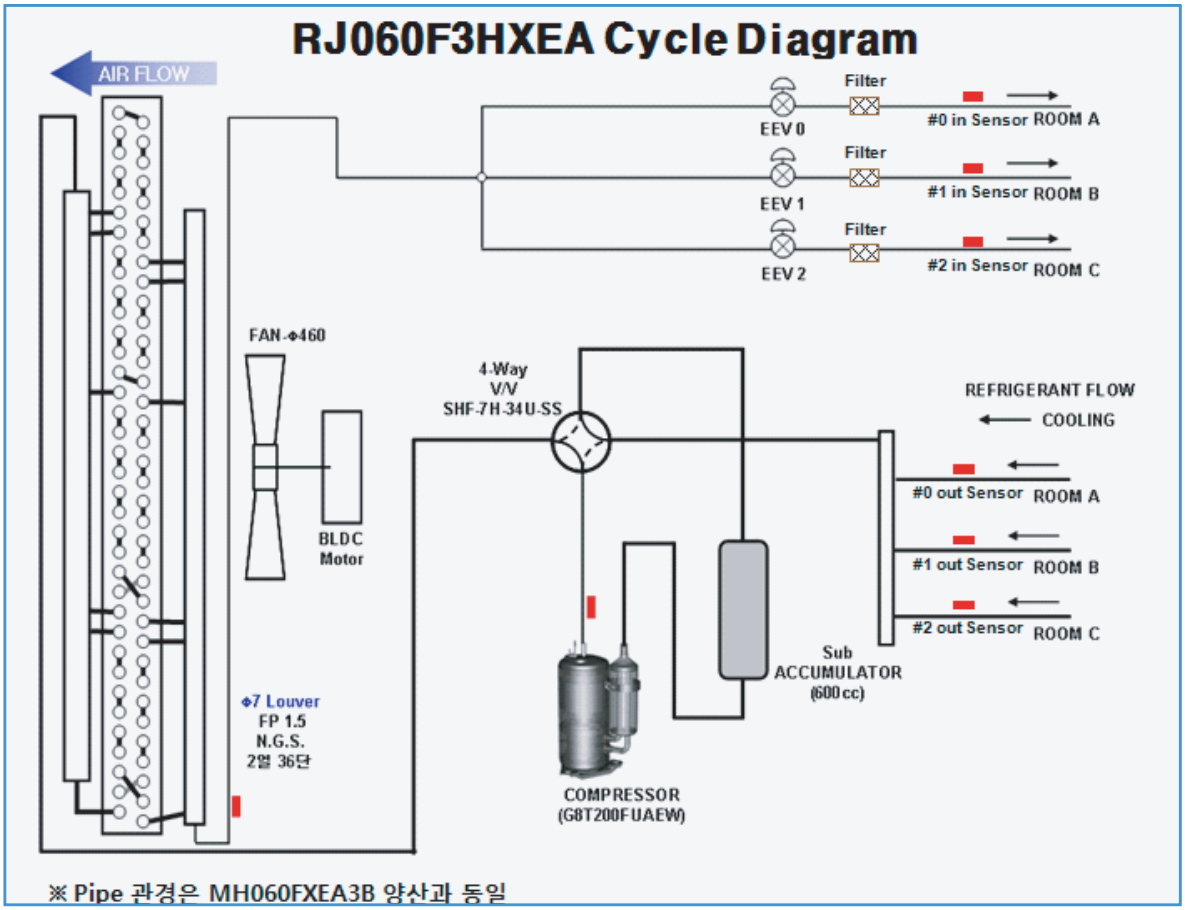
RJ060F3HXEA Cycle Diagram
AIR FLOW
Filter
EEV 0
#0 in Sensor
ROOM A
Filter
EEV 1
#1 in Sensor
ROOM B
Filter
EEV 2
#2 in Sensor
ROOM C
FAN-Φ460
4-Way
V/V
SHF-7H-34U-SS
REFRIGERANT FLOW
COOLING
#0 out Sensor
ROOM A
#1 out Sensor
ROOM B
#2 out Sensor
ROOM C
BLDC
Motor
Sub
ACCUMULATOR
(600cc)
Φ7 Louver
FP 1.5
N.G.S.
2열 36단
COMPRESSOR
(G8T200FUAEW)
※ Pipe 관경은 MH060FXEA3B 양산과 동일

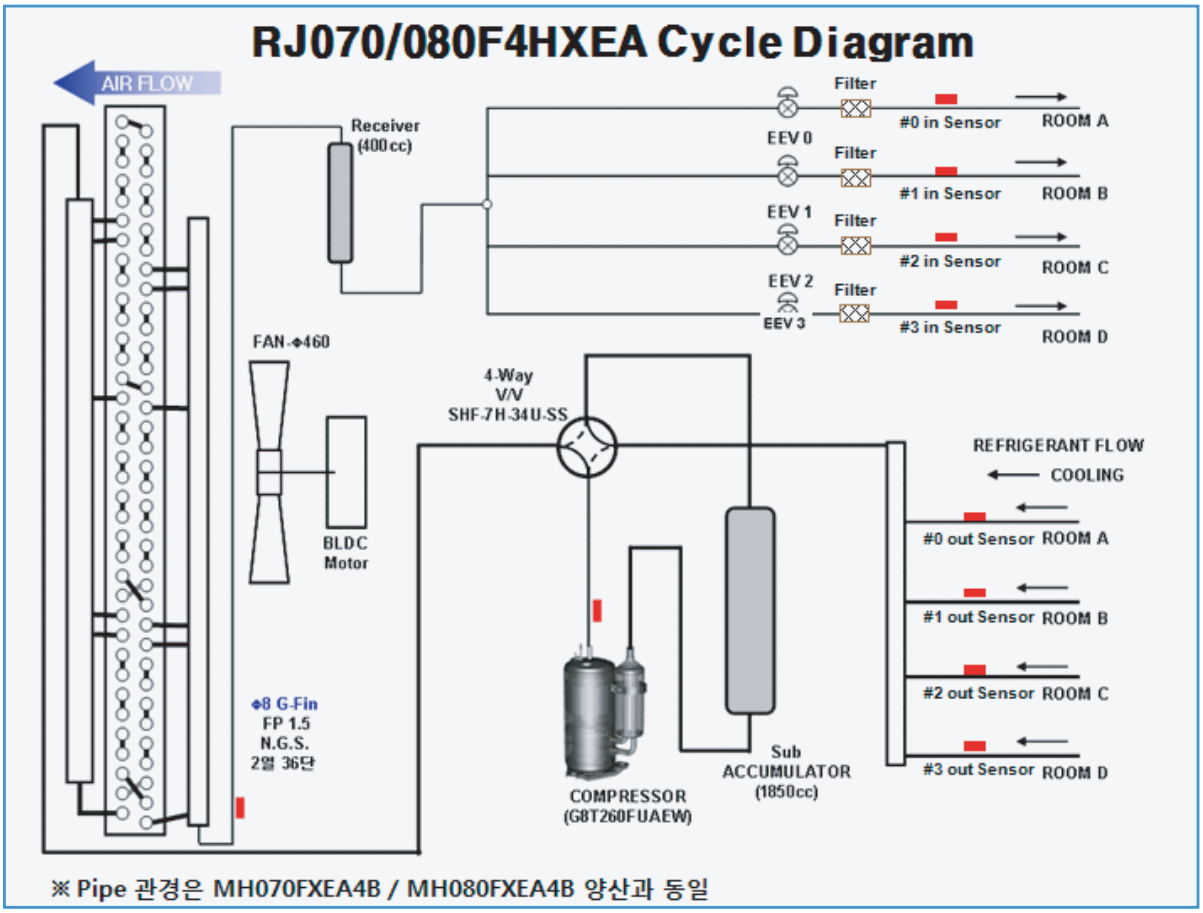
RJ070/080F4HXEA Cycle Diagram
AIR FLOW
Receiver
(400cc)
Filter
EEV 0
#0 in Sensor
ROOM A
Filter
EEV 1
#1 in Sensor
ROOM B
Filter
EEV 2
#2 in Sensor
ROOM C
Filter
EEV 3
#3 in Sensor
ROOM D
FAN-Φ460
4-Way
V/V
SHF-7H-34U-SS
REFRIGERANT FLOW
COOLING
#0 out Sensor
ROOM A
#1 out Sensor
ROOM B
#2 out Sensor
ROOM C
#3 out Sensor
ROOM D
BLDC
Motor
Φ8 G-Fin
FP 1.5
N.G.S.
2열 36단
Sub
ACCUMULATOR
(1850cc)
COMPRESSOR
(G8T260FUAEW)
※ Pipe 관경은 MH070FXEA4B / MH080FXEA4B 양산과 동일

9-9 Pressure & Capacity mark

■ Power/Heat

W	cal/s	kcal/h	Btu/h	HP	kg·m/s	ib·m/s
1	0.23885	0.85985	3.4121	0.001341	0.10197	0.73756
4.1868	1	3.6	14.286	0.0056146	0.42693	3.088
1.163	0.27778	1	3.9683	0.0015596	0.11859	0.85778
0.29307	0.06999	0.252	1	3.9302×10^{-4}	0.029885	0.21616
745.7	178.11	641.19	**2,544.4**	1	76.04	550
9.8067	2.3423	8.4322	33.462	0.013151	1	7.233
1.3558	0.32383	1.1658	4.6262	0.0018182	0.13826	1

9-10 The abbreviated technology words & the definition of technology terms

Abbreviated technology words	Definition of technology terms
COMP(Full name compressor)	One that compresses, especially a machine used to compress gases.
BLOWER	One that blows, especially a mechanical device, such as f fan, that produces a current of air.
FAN	A device for reeating a current of air or a breeze.
ASS'Y CONTROL BOX (Full name : Assemble control box)	A restraining device of air-condition, measure, or limit.
MOTOR	Something, such as a machine or an engine, that produces or imparts motion.
ASS'Y EVAP/ASS'Y COND (Full name : assemble evaporator / assemble condenser)	Heat exchanger; A device, used to transfer heat from a fluid on one side of a barrier to a fluid on the other side without bringing the fluids into direct contact.

9-11 Q & A for Non-trouble

Classification	Class	Description
Cooling	Q	**The cooling is weak.**
	A	When it is hot outside, its cooling capacity decreases due to the increase of the ambient temperature. When the dust filter gets blocked or warm outside air gets in, the cooling capacity will decrease. So, make sure to clean the dust filter frequently, prevent heat loss by closing the doors and insulate the cooling area by using curtains, blinds, shades or window tinting.
	Q	**The cooling is good generally. But, it gets weak when it is considerably hot.**
	A	It occurs when the outdoor unit is exposed to direct sun light and heat-up air is not ventilated well. So, set up a sunblind over the outdoor unit and keep stuff away from the unit to increase the ventilation. When the cooling capacity decreases during a heat wave, clean the heat exchanger of the outdoor unit or spray some cold water to the heat exchanger to increase the cooling capability.
	Q	**The cooling is weak. Does it need refrigerant charging?**
	A	It is not correct charging refrigerant regularly. Except that you have moved in several times or the connection pipes are broken, the refrigerant does not run low. So, when refrigerant is additionally charged, it could be costly and cause a product's failure. When the refrigerant leaks, all of it will escape in a short time resulting in cooling failure and no water coming out of the drain hose. So, if water comes out from the drain hose, it indicates the normal operation of the product and it does not need refrigerant charging.
	Q	**It fails to do cooling.**
	A	When the air conditioner is set to Ventilation or the desired temperature is set higher than the current temperature, it fails to do cooling. In this case, select Cooling or set the desired temperature lower.
Leakage	Q	**It floods the floor.**
	A	Place the drain hose properly. When it is not placed properly, the drain water would flow back flooding the floor. So, straighten out the drain hose for the water to be drained well.
	Q	**Water drips at the drain connection (service valve) of the outdoor unit.**
	A	When a glass bottle is taken out of the refrigerator, moisture gets condensed on its surface due to the temperature differences. The same principle applies to the air conditioner. When cold refrigerant goes through the copper tube, moisture gets condensed on the surface of the tube and the connection areas. To prevent the water condensation, the pipes are insulated. But, the connection areas of the outdoor unit are not insulated for the purpose of maintenance or repair, and water gets condensed due to the temperature differences and drips down. Generally, it evaporates right away. But, when it drips much during muggy days, put a water pan on the floor.
	Q	**It leaks even though a drain pump is used.**
	A	It occurs when the drain pump is plugged out or it is out of order. Check the power of the drain pump and the position of the drain hose, and when the pump is faulty, contact the drain pump manufacturer. Samsung Electronics do not manufacture drain pumps. So, we are not able to correct the drain pump problems.
Smells	Q	**Whenever the air conditioner is turned on, it irritates my eyes and gives me a headache.**
	A	There are no components in the air conditioner irritating the eyes and sending out chemical smells. But, when the air conditioner is turned on, other smell sources are sucked into the air conditioner and get out of it. So, find and root out the smell sources. Generally, it occurs at a interior renovated place, a pharmacy, a gasoline handling place, a tire shop, a second-hand book shop or an electronic

Classification	Class	Description
Smells		component handling place; when its chemical or musty smells are sucked in and sent out, it can be misled that the air conditioner generates them. So, find and root out the problem or refresh the room frequently.
	Q	**Whenever the air conditioner is turned on, it stinks.**
	A	There are no components in the air conditioner sending out chemical smells. But, when the air conditioner is turned on, other smell sources are sucked into the air conditioner and get out of it. So, find and root out the smell sources. Generally, when the drain hose is taken out to the washing room or there are sources of smells such as a diaper bin, a shoe shelf or a socks bin, bad smells generate. Also, it occurs where glass cleaners or air fresheners are used; when they are sucked in interacting with dusts and moistures inside, bad smells generate. These kinds of organic materials noxious to human bodies. So, we recommend against the use of them.
	Q	**Whenever the air conditioner is turned on, it smells sour.**
	A	When the room is papered recently, its paste smells would be sucked inside. Also, when the air conditioner is installed in the study room of young boys loving sweat-generating activities such as the basketball, excessive sweats evaporate and get sucked into the air conditioner resulting in bad smells. So, find and root out the problem or refresh the room frequently.
	Q	**Whenever the air conditioner is turned on, it smells musty.**
	A	It is due to the improper keeping of the product after its use. When keeping the product, dry up the inside with the operation of Ventilation to prevent must. When the product is kept without drying up the inside with Ventilation, mold would grow inside resulting in must. So, open the windows and switch on the Ventilation function to get rid of the saturated smell inside.
	Q	**Whenever the air conditioner is turned on, it sends out bad smells such as stale smells.**
	A	It occurs generally when there are pet animals in the house. Their smells stay at the same place. But, when the air conditioner is turned on, the air gets circulated resulting in the circulation of the smells. So, find and root out the problem or refresh the room frequently.
	Q	**It sends out bad smells.**
	A	When the air filter is filthy, it could send out bad smells. So, clean the filter and ventilate the room with the windows open while operating the Ventilation function.
Operation	Q	**It won't start.**
	A	There is a power failure or it is plugged out. Also, check if the power distribution panel is switched off.
	Q	**It goes off during operation.**
	A	When the hot air does not escape properly, it goes off during operation. It occurs when it does not ventilate properly because the outdoor unit is covered, the back of the outdoor unit is blocked by a cardboard or a plywood panel, and the front of the outdoor unit is blocked by the closed window or other obstacles. Clear the above obstacles from the outdoor unit.
	Q	**It generally works properly. But, when it's considerably hot, it goes off during operation.**
	A	It occurs when the outdoor unit is exposed to direct sunlight and the hot air does not escape properly. Set up a sun blind over the outdoor unit and clear the neighboring obstacles from the outdoor unit to provide good ventilation. When it goes off frequently during a heat wave, it would prevent the turn-off and increase the cooling capacity cleaning the outdoor unit or spraying some water to the heat exchanger.

Q & A for Non-trouble (cont.)

Classification	Class	Description
Operation	Q	**The remote controller won't operate.**
	A	When the batteries run out or the transmitter or receiver of the remote controller is blocked by obstacles, change the batteries or keep the obstacles away from the controlling area. Also, the remote controller may not work under intensive light from a 3-wave length lamp or a neon sign due to the EMI. In this case, take the remote controller closer to the receiver.
Installation	Q	**Who installs the air conditioner? (Relocation/Re-installation)**
	A	When relocating or re-installing the air conditioner, make sure to contact Samsung Electronics Service Center or Authorized Service Agent and have them to do the job.(If not, it could cause personal injury or product damage.) The cost for the relocation/re-installation of the air conditioner is subject to the customer's expense. There is a cost table. But, our service engineer needs to visit to total up the cost correctly. When you move in, make sure to contact Samsung Electronics Service Center or Authorized Service Agent in advance to streamline the process.
	Q	**Is it possible to install the outdoor unit outside?**
	A	It is possible to install it at a designated place in the apartment or on the rooftop nearby. But, it's illegal hanging an angle iron case with the outdoor unit in it outside the apartment. Also, it is illegal obstructing passers-by with the outdoor unit installed outside.
	Q	**What can be done to install the outdoor unit facing the road because it is a commercial building?**
	A	The following is an excerpt from Building Code going into effect from JUNE 1st 2005. "The exhaust pipe of a cooling or ventilation facility installed in a building adjacent to the streets of commercial or residential areas shall be installed higher than 2m to prevent the exhaust air from blowing directly to passers-by and the current facilities shall be corrected by MAY 31st 2005." So, please install it higher than 2m or not to blow the hot exhausting air directly to passers-by.
	Q	**What about installing a windscreen during installation not to blow hot air directly to passers-by?**
	A	When the hot air from the front of the outdoor unit is blocked, the product's performance will be affected and it will fail to operate properly. So, keep it at least 300mm away from its surrounding walls and give it good ventilation.

9-12 Common sense of refrigeration

■ Air supplier?

It supplies fresh air to the building or room through procedure of air circulation for fresh environment.

■ Effectiveness of air supplier

It diminishes the stress or fatigue and enhances vivid desire through fresh air circulation. Also, filthy air indoor is being cleaned by Air-Filter and it keeps clean and fresh environment and dehumidification. Temperature, humidity, air stream, cleanness are called for factors of air supplier and they are kept in proper condition for usage purpose.

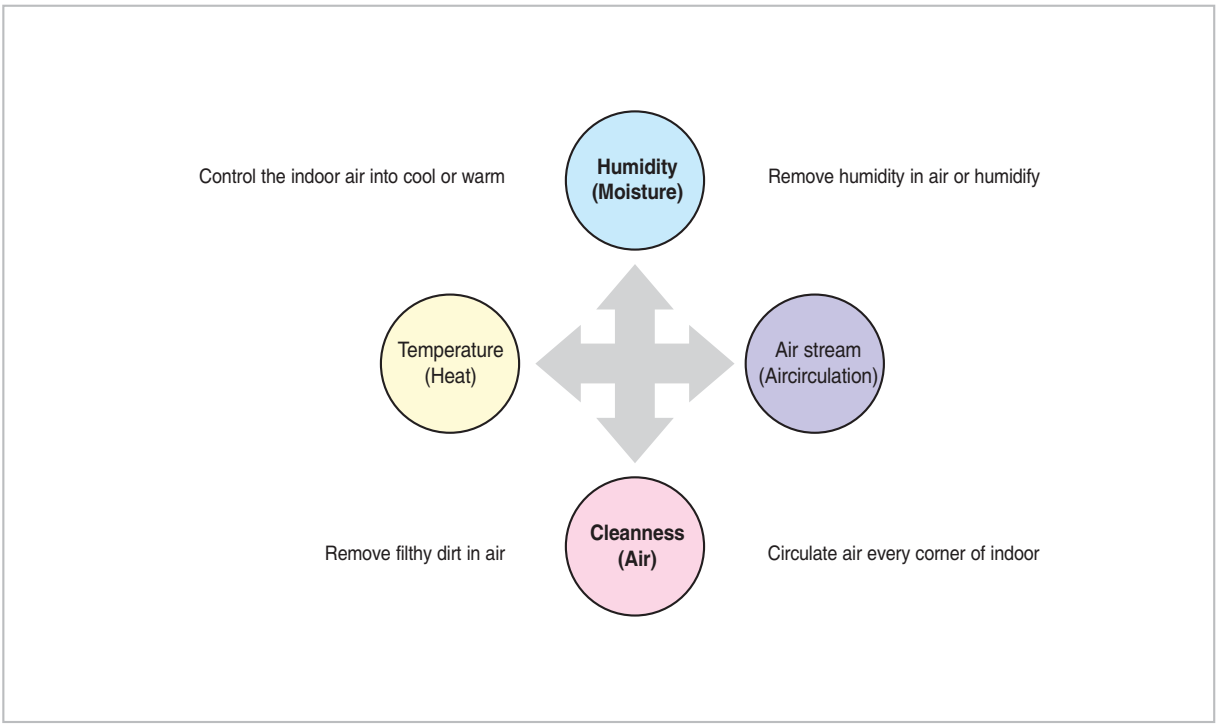

■ Four factors of air suppliers

The human body keeps regular temperature regarding the human body's freshness.
For keeping freshness, heat generated from human body should emit outside of the body by air circulation, conduction, emission, and evaporation. The human body feels freshness when the emission rate is 40~45%, which was emitted by a radiation when it is comfortable and warm, and air circulation and conduction is 20~30%, and evaporation is 20~24%.
It sometimes may depends on seasonal factor, wearing condition, age, sex and mental state other than indoor environment.
But generally the value of fresh indoor temperature is that below 0.2(m/s) of indoor air circulation, the temperature is 21~28˚C when the wall temperature is the same as the indoor's and relative humidity is 30~31% in summer, the winter temperature is 20~24˚C and relative humidity is 30~60% in winter.

GSPN(Global Service Partner Network)

Area	Web Site
North America	http://service.samsungportal.com
Latin America	http://latin.samsungportal.com
CIS	http://cis.samsungportal.com
Europe	http://europe.samsungportal.com
China	http://china.samsungportal.com
Asia	http://asia.samsungportal.com
Mideast & Africa	http://mea.samsungportal.com

This Service Manual is a property of Samsung Electronics Co., Ltd.
Any unauthorized use of Manual can be punished under applicable International and/or domestic law.

© Samsung Electronics Co., Ltd.Mar. 2010.
Printed in China.
Code No. DB98-33204A(1)